AXOR

PRODUCT CATALOGUE 2026

Contents

Errors and omissions excepted. Upon publication of this product catalogue, all previously published price books are no longer valid. Figures given for dimensional drawings are in mm. Please note that the accuracy of color reproduction may vary due to technical limitations in color reproduction, material surfaces and lighting conditions. Although we make every effort to reproduce the colors shown as accurately as possible, we cannot exclude the possibility of color deviations. When installing the products, please follow the instructions in the installation manual. All products are subject to availability. The availability may be temporarily impacted by material shortages, interruptions in the supply chain or other force majeure events. Please contact us for further details.

The following general terms and conditions shall apply: https://www.hansgrohe.com/terms-of-conditions

The AXOR Brand 32

Collections

AXOR Citterio C 58
AXOR One 100
AXOR Edge 142
AXOR MyEdition 166
AXOR Starck 192
AXOR Starck Organic 220
AXOR Citterio 236
AXOR Citterio E 272
AXOR Urquiola 304
AXOR Massaud 322
AXOR Uno 332
AXOR Montreux 358

Programs

AXOR ShowerComposition 390
AXOR Showers 402
AXOR Shower systems 482
AXOR Shower controls 506
AXOR Accessories 536
AXOR Electronic faucets 582
AXOR Wash basins and bathtubs 592
AXOR Kitchen faucets 606
AXOR Drain, wastes and overflows 628
AXOR Basic sets 646

Planning & Inspiration

Planning & Installation 692
AXOR Inspiration 714
AXOR Design Dictionary 726

Phase-out products 2026
Available while stock lasts

	Code no.
AXOR Starck	
2-handle basin mixer 80 with pop-up waste set	10030000
2-hole rim mounted thermostatic bath mixer with zero handles	10480000
2-hole rim mounted thermostatic bath mixer with zero handles	10480340
Single lever kitchen mixer 240 Semi-Pro	10820000
Single lever kitchen mixer 240 Semi-Pro	10820800
AXOR Starck V	
2-hole basin mixer 110 with waste set	12115000
Single lever basin mixer 140 with glass spout and waste set – bevel cut	12123000
Single lever basin mixer 140 with glass spout and waste set – bevel cut	12123990
AXOR Starck Organic	
Pillar tap 50 without waste set	12110000
Bath spout	12417000
2-hole rim mounted thermostatic bath mixer	12422000
4-hole rim mounted thermostatic bath mixer	12425000
4-hole tile mounted thermostatic bath mixer	12426000
AXOR Citterio M	
Single lever basin mixer 100 with pop-up waste set	34010000
Single lever basin mixer 70 for hand wash basins with pop-up waste set	34016000
Single lever basin mixer 100 with waste set	34017000
Single lever basin mixer for concealed installation wall-mounted with spout 167 mm and plate	34112000
Single lever basin mixer for concealed installation wall-mounted with spout 167 mm and escutcheons	34113000
Single lever basin mixer for concealed installation wall-mounted with spout 227 mm and plate	34115000
Single lever basin mixer for concealed installation wall-mounted with spout 227 mm and escutcheons	34116000
Single lever basin mixer 250 for wash bowls with waste set	34127000
Pillar tap 90 without waste set	34130000
2-hole basin mixer 160 with pop-up waste set	34132000
3-hole basin mixer 160 with lever handles, escutcheons and pop-up waste set	34133000
Single lever bidet mixer with pop-up waste set	34210000
3-hole basin mixer for concealed installation wall-mounted with spout 166 mm, lever handles and escutcheons	34313000
3-hole basin mixer for concealed installation wall-mounted with spout 226 mm, lever handles and escutcheons	34315000
Bath spout	34410000
Single lever bath mixer for concealed installation	34425000
Single lever bath mixer for concealed installation with integrated security combination according to EN1717	34427000

	Code no.
4-hole rim mounted bath mixer with lever handles and escutcheons	34444000
4-hole tile mounted bath mixer with lever handles and escutcheons	34454000
Single lever shower mixer for concealed installation	34625000
Thermostat for concealed installation	34715000
Thermostat HighFlow for concealed installation	34716000
Shut-off/diverter valve Trio/Quattro for concealed installation	34920000
Shut-off valve for concealed installation with lever handle	34960000
AXOR Urquiola	
Wash bowl 624/408	11300000
Wash bowl 511/427	11301000
Wash basin 624/399 wall-mounted	11302000
Bath spout	11430000
3-hole rim mounted bath mixer	11436000
Bath tub 1800/600	11440000
4-hole tile mounted bath mixer	11445000
Single lever shower mixer for concealed installation	11625000
AXOR Uno	
2-hole rim mounted thermostatic bath mixer	38480000
2-hole rim mounted thermostatic bath mixer	38480340
2-hole rim mounted thermostatic bath mixer	38480820
Wall outlet stop with shut-off valve	38882000
Wall outlet stop with shut-off valve	38882340
Wall outlet stop with shut-off valve	38882820
AXOR ShowerSolutions	
Overhead shower 460/300 2jet with shower arm and softsquare escutcheon	35275000
Overhead shower 460/300 2jet with ceiling connection	35279000
Overhead shower 460/300 2jet with shower arm and square escutcheon	35280000
Thermostat for concealed installation softsquare for 2 functions	36707000
Thermostat for concealed installation softsquare for 2 functions	36707140
Thermostat for concealed installation softsquare for 2 functions	36707340
Thermostat for concealed installation softsquare for 2 functions	36707670
Thermostat for concealed installation softsquare for 2 functions	36707820
Thermostat for concealed installation softsquare for 2 functions	36707990
Thermostat for concealed installation square for 2 functions	36715000
Thermostat for concealed installation square for 2 functions	36715140
Thermostat for concealed installation square for 2 functions	36715340

	Code no.
Thermostat for concealed installation square for 2 functions	36715670
Thermostat for concealed installation square for 2 functions	36715820
Thermostat for concealed installation square for 2 functions	36715990
Thermostat for concealed installation round for 2 functions	36723000
Thermostat for concealed installation round for 2 functions	36723140
Thermostat for concealed installation round for 2 functions	36723340
Thermostat for concealed installation round for 2 functions	36723670
Thermostat for concealed installation round for 2 functions	36723820
Thermostat for concealed installation round for 2 functions	36723990
Wall outlet softsquare	36731000
Wall outlet softsquare	36731140
Wall outlet softsquare	36731340
Wall outlet softsquare	36731670
Wall outlet softsquare	36731820
Wall outlet softsquare	36731990
Wall outlet square	36732000
Wall outlet square	36732140
Wall outlet square	36732340
Wall outlet square	36732820
Wall outlet square	36732990

AXOR ShowerSelect

Thermostat for concealed installation softsquare for 1 function	36705000
Thermostat HighFlow for concealed installation softsquare for 1 function and additional outlet	36706000
Thermostat HighFlow for concealed installation softsquare	36711000
Thermostat HighFlow for concealed installation softsquare	36711670
Thermostat for concealed installation square for 2 functions with wall outlet and shower holder	36712000
Thermostat for concealed installation square for 1 function	36714000
Thermostat HighFlow for concealed installation square for 1 function and additional outlet	36716000
Valve for concealed installation square for 3 functions	36717000
Thermostat HighFlow for concealed installation square	36718000
Thermostat HighFlow for concealed installation round	36721000
Thermostat HighFlow for concealed installation round	36721820
Thermostat for concealed installation round for 1 function	36722000
Thermostat for concealed installation round for 1 function	36722820
Thermostat HighFlow for concealed installation round for 1 function and additional outlet	36726000
Thermostat HighFlow for concealed installation round for 1 function and additional outlet	36726820
Valve for concealed installation round for 3 functions	36727000
Valve for concealed installation round for 3 functions	36727820

	Code no.
Valve for concealed installation softsquare for 3 functions	36773000
Valve for concealed installation softsquare for 3 functions	36773670

Other

Shower hose 1.25 m with volume control	28127000
Shower hose 1.60 m with volume control	28128000
Shower hose 1.60 m with volume control	28128820
Complete set bath filler, waste and overflow set for standard bath tubs	58307000
Complete set bath filler, waste and overflow set for standard bath tubs	58307140
Complete set bath filler, waste and overflow set for standard bath tubs	58307340
Complete set bath filler, waste and overflow set for standard bath tubs	58307670
Complete set bath filler, waste and overflow set for standard bath tubs	58307700
Complete set bath filler, waste and overflow set for standard bath tubs	58307820
Complete set bath filler, waste and overflow set for standard bath tubs	58307990
Complete set waste and overflow set for standard bath tubs	58316000
Complete set waste and overflow set for standard bath tubs	58316140
Complete set waste and overflow set for standard bath tubs	58316340
Complete set waste and overflow set for standard bath tubs	58316670
Complete set waste and overflow set for standard bath tubs	58316700
Complete set waste and overflow set for standard bath tubs	58316820
Complete set waste and overflow set for standard bath tubs	58316990
Complete set bath filler, waste and overflow set for special bath tubs	58317000
Complete set bath filler, waste and overflow set for special bath tubs	58317670
Complete set bath filler, waste and overflow set for special bath tubs	58317700
Complete set waste and overflow set for special bath tubs	58318000
Complete set waste and overflow set for special bath tubs	58318670
Complete set waste and overflow set for special bath tubs	58318700

Code Numbers (HG = hansgrohe, AX = AXOR)

brand	Code no.	EAN	page
01			
AX	01005180	4059625482810	680
AX	01006180	4059625482803	681
AX	01007180	4059625482797	681
AX	01400180	4059625316931	652
AX	01700180	4059625032343	656
AX	01750180	4059625032350	656
10			
AX	10001000	4011097754260	202
AX	10001340	4011097835549	202
AX	10003000	4011097754277	202
AX	10003340	4011097835891	202
AX	10007000	4011097760803	202
AX	10007340	4011097847788	202
AX	10010000	4011097177847	200
AX	10018000	4011097329406	200
AX	10101000	4011097545370	586
AX	10101340	4011097852492	586
AX	10102000	4011097754284	200
AX	10102340	4011097852737	200
AX	10103000	4011097754291	202
AX	10103340	4011097852867	202
AX	10106000	4011097545394	586
AX	10106340	4011097853024	586
AX	10111000	4011097436685	201
AX	10111340	4011097853277	201
AX	10116000	4011097436722	200
AX	10116340	4011097852225	200
AX	10117000	4011097436746	201
AX	10117340	4011097853734	201
AX	10123000	4011097676883	202
AX	10123340	4011097853970	202
AX	10129000	4011097436807	202
AX	10129340	4011097854113	202
AX	10140000	4011097545615	586
AX	10140340	4011097857657	586
AX	10145000	4011097545639	586
AX	10145340	4011097857954	586
AX	10211000	4011097436821	203
AX	10211340	4011097854939	203
AX	10214000	4011097785103	203
AX	10214340	4011097855097	203
AX	10300000	4011097493701	204
AX	10300340	4011097858364	204
AX	10303180	4011097342597	668
AX	10410000	4011097177939	206
AX	10410340	4011097855523	206
AX	10411000	4011097436845	204
AX	10411340	4011097858647	204
AX	10416000	4011097365893	206
AX	10416340	4011097859064	206
AX	10418000	4011097381633	206
AX	10418340	4011097859200	206
AX	10452180	4011097254104	669
AX	10456000	4011097436869	205
AX	10456340	4011097814575	205
AX	10531000	4011097678016	211
AX	10531140	4011097820859	211
AX	10531340	4011097820842	211
AX	10531820	4011097820880	456

brand	Code no.	EAN	page
AX	10531990	4011097820958	211
AX	10611000	4011097436883	207
AX	10611340	4011097861425	207
AX	10616000	4011097365916	208
AX	10616340	4011097861852	208
AX	10621800	4011097585758	416
AX	10623800	4011097585765	415
AX	10625800	4011097585772	416
AX	10627800	4011097585789	415
AX	10637000	4059625030189	415
AX	10650180	4011097594309	680
AX	10651000	4011097594293	531
AX	10700000	4011097338040	208
AX	10700340	4011097862415	208
AX	10720000	4011097338101	209
AX	10720340	4011097863245	209
AX	10750180	4011097594286	675
AX	10751000	4011097593760	529
AX	10754180	4011097625690	675
AX	10755000	4011097625706	529
AX	10821000	4011097688565	618
AX	10821340	4011097864105	618
AX	10821800	4011097688572	618
AX	10822000	4011097688541	618
AX	10822800	4011097688558	618
AX	10823000	4011097693712	626
AX	10823800	4011097694566	626
AX	10902180	4011097306414	667
AX	10921180	4011097678542	683
AX	10922180	4011097814186	682
AX	10924000	4011097677910	435
AX	10925000	4011097679747	436
AX	10925340	4011097831978	436
AX	10929000	4011097679754	436
AX	10932000	4011097594323	530
AX	10941180	4011097678535	686
AX	10942000	4011097678559	437
AX	10971180	4011097594279	677
AX	10972000	4011097594316	530
11			
AX	11020000	4011097598512	312
AX	11021000	4011097598529	312
AX	11024000	4011097634340	313
AX	11025000	4011097604503	312
AX	11026000	4011097613123	313
AX	11035000	4011097684949	313
AX	11040000	4011097613130	314
AX	11041000	4011097613109	314
AX	11042000	4011097597782	315
AX	11043000	4011097597775	315
AX	11220000	4011097598574	315
AX	11420000	4011097604510	315
AX	11422000	4011097604527	316
AX	11425000	4011097598604	317
AX	11443000	4011097637969	317
AX	11620000	4011097604541	318
AX	11626000	4011097598673	318
AX	11626670	4059625433966	318
AX	11732000	4011097597546	318
AX	11733000	4011097597560	319

brand	Code no.	EAN	page
AX	11980000	4011097667607	667
12			
AX	12010000	4011097700618	231
AX	12011000	4011097700625	231
AX	12012000	4011097700632	231
AX	12013000	4011097700649	231
AX	12014000	4011097700656	230
AX	12015000	4011097702308	231
AX	12016000	4011097727929	232
AX	12112000	4011097734309	218
AX	12112450	4011097760810	218
AX	12114000	4011097771489	218
AX	12171000	4011097760797	587
AX	12172000	4011097760780	587
AX	12173000	4011097760773	587
AX	12174000	4011097760766	587
AX	12423000	4059625524978	414
AX	12427000	4059625524985	414
AX	12571000	4059625450338	400
AX	12571670	4059625489215	400
AX	12572000	4059625450314	400
AX	12572670	4059625489208	400
AX	12573000	4059625450291	400
AX	12573670	4059625489192	400
AX	12592000	4059625450277	396
AX	12592670	4059625489185	396
AX	12593000	4059625450253	397
AX	12593670	4059625489178	397
AX	12594000	4059625450239	397
AX	12594670	4059625489161	397
AX	12595000	4059625450215	398
AX	12595670	4059625489154	398
AX	12596000	4059625450192	399
AX	12596670	4059625489147	399
AX	12626000	4011097711102	263
AX	12626140	4011097824482	263
AX	12626340	4011097824475	263
AX	12626820	4011097825816	462
AX	12626990	4011097825885	263
AX	12670340	4059625435038	499
AX	12670670	4059625442470	499
AX	12670800	4059625435045	499
AX	12671340	4059625435137	499
AX	12671670	4059625442487	499
AX	12671800	4059625435144	499
AX	12672000	4059625435182	498
AX	12672340	4059625435243	498
AX	12672670	4059625442494	498
AX	12672800	4059625435250	498
AX	12676180	4059625450178	687
AX	12715000	4011097702360	233
AX	12716000	4011097702377	233
AX	12918000	4011097703930	668
AX	12922180	4059625521656	682
13			
AX	13586000	4059625032220	666
AX	13587000	4059625032367	657
HG	13588000	4059625477359	652
AX	13594000	4011097702100	664
AX	13603000	4059625080078	682

brand	Code no.	EAN	page
AX	13609000	4059625329832	666
AX	13610000	4059625329825	662
AX	13610670	4059625329818	662
AX	13610700	4059625464946	662
AX	13611000	4059625329801	662
AX	13611670	4059625329788	662
AX	13611700	4059625464922	662
AX	13623180	4059625032213	665
AX	13625180	4059625329764	666
HG	13632000	4059625464250	653
HG	13637000	4059625534090	653
HG	13638000	4059625536209	653
AX	13640000	4059625560648	654
AX	13640140	4059625560631	654
AX	13640340	4059625560624	654
AX	13640670	4059625560617	654
AX	13640990	4059625560600	654
AX	13641000	4059625560594	654
AX	13641140	4059625560587	654
AX	13641340	4059625560570	654
AX	13641670	4059625560563	654
AX	13641990	4059625560556	654
AX	13642000	4059625560549	654
AX	13642140	4059625560532	654
AX	13642340	4059625560525	654
AX	13642670	4059625560518	654
AX	13642700	4059625560501	654
AX	13642990	4059625560495	654
AX	13643000	4059625560488	655
AX	13643140	4059625560471	655
AX	13643340	4059625560464	655
AX	13643670	4059625560457	655
AX	13643990	4059625560440	655
AX	13645000	4059625560433	655
AX	13645140	4059625560426	655
AX	13645340	4059625560419	655
AX	13645670	4059625560402	655
AX	13645990	4059625560297	655
AX	13646000	4059625560280	655
AX	13646140	4059625560273	655
AX	13646340	4059625560266	655
AX	13646670	4059625560259	655
AX	13646700	4059625560242	655
AX	13646990	4059625560235	655
14			
AX	14960000	4011097759777	658
AX	14960340	4011097876207	658
AX	14961000	4011097759791	658
AX	14961340	4011097876344	658
AX	14962000	4011097759814	658
AX	14963000	4011097759838	659
AX	14964000	4011097759852	659
AX	14965000	4011097759869	659
AX	14967000	4011097759883	660
AX	14969000	4011097759906	660
AX	14970000	4011097759913	660
AX	14971000	4011097759920	661
AX	14972000	4011097759937	661
AX	14973000	4011097759944	661
AX	14974000	4011097759951	662

Code Numbers (HG = hansgrohe, AX = AXOR)

brand	Code no.	EAN	page
15			
AX	15480180	4059625077498	672
AX	15481180	4059625077528	673
AX	15482180	4059625077566	671
AX	15483180	4059625077580	672
AX	15484180	4059625077603	671
AX	15485180	4059625077627	671
AX	15486180	4059625077658	670
AX	15487180	4059625190241	639
AX	15490180	4059625202883	639
16			
AX	16180180	4011097678894	664
AX	16182180	4011097797427	665
AX	16261000	4011097515137	377
AX	16261340	4011097878416	377
AX	16261820	4011097518237	377
AX	16320000	4011097518527	384
AX	16320340	4011097878546	384
AX	16320820	4011097518534	384
AX	16325000	4011097515144	376
AX	16325340	4011097878683	376
AX	16325820	4011097518558	376
AX	16502000	4011097515168	367
AX	16502340	4011097878935	367
AX	16502820	4011097515175	367
AX	16505000	4011097515229	367
AX	16505340	4011097879062	367
AX	16505820	4011097515236	367
AX	16506000	4011097515250	367
AX	16506340	4011097879192	367
AX	16506820	4011097515267	367
AX	16510000	4011097515281	368
AX	16510340	4011097879321	368
AX	16510820	4011097515298	368
AX	16511000	4011097785035	368
AX	16511340	4011097879451	368
AX	16511820	4011097808451	368
AX	16513000	4011097509747	370
AX	16513340	4011097879598	370
AX	16513820	4011097515311	370
AX	16514000	4011097784762	370
AX	16514340	4011097879727	370
AX	16514820	4011097808444	370
AX	16515000	4011097823317	366
AX	16515340	4011097879864	366
AX	16515820	4011097823300	366
AX	16516000	4011097823294	366
AX	16516340	4011097880006	366
AX	16516820	4011097823287	366
AX	16517000	4011097823270	367
AX	16517340	4011097880143	367
AX	16517820	4011097823263	367
AX	16518000	4011097823256	367
AX	16518340	4011097880280	367
AX	16518820	4011097823249	367
AX	16520000	4011097515366	372
AX	16520340	4011097880433	372
AX	16520820	4011097515373	372
AX	16526000	4011097823232	371
AX	16526340	4011097880686	371

brand	Code no.	EAN	page
AX	16526820	4011097823225	371
AX	16530000	4011097515427	368
AX	16530340	4011097880822	368
AX	16530820	4011097517919	368
AX	16532000	4011097509556	371
AX	16532340	4011097880952	371
AX	16532820	4011097515441	371
AX	16534000	4011097785028	371
AX	16534340	4011097881089	371
AX	16534820	4011097808437	371
AX	16535000	4011097822273	369
AX	16535340	4059625018101	369
AX	16535820	4011097822259	369
AX	16536000	4011097822228	369
AX	16536340	4059625018231	369
AX	16536820	4011097822204	369
AX	16540000	4011097515496	372
AX	16540340	4011097881508	372
AX	16540820	4011097515502	372
AX	16541000	4011097509709	374
AX	16541340	4011097881638	374
AX	16541820	4011097515526	374
AX	16544000	4011097509525	375
AX	16544340	4011097881768	375
AX	16544820	4011097515571	375
AX	16546000	4011097509587	374
AX	16546340	4011097881898	374
AX	16546820	4011097515595	374
AX	16547000	4011097515618	373
AX	16547340	4011097819013	373
AX	16547820	4011097515625	373
AX	16549180	4011097527062	670
AX	16550000	4011097785011	374
AX	16550340	4011097882024	374
AX	16550820	4011097808420	374
AX	16551000	4011097785004	372
AX	16551340	4011097882161	372
AX	16551820	4011097808413	372
AX	16553000	4011097784885	373
AX	16553340	4011097882307	373
AX	16553820	4011097808390	373
AX	16554000	4011097784878	375
AX	16554340	4011097882444	375
AX	16554820	4011097808383	375
AX	16560000	4011097515649	376
AX	16560340	4011097882581	376
AX	16560820	4011097515656	376
AX	16572000	4011097809694	385
AX	16572340	4011097882840	385
AX	16572820	4011097823218	385
AX	16580000	4011097823201	624
AX	16580340	4011097882987	624
AX	16580800	4011097822891	624
AX	16581000	4011097822884	625
AX	16581340	4011097883120	625
AX	16581800	4011097822877	625
AX	16582000	4011097822860	625
AX	16582800	4011097822853	625
AX	16800000	4011097515724	380
AX	16800340	4011097883403	380

brand	Code no.	EAN	page
AX	16800820	4011097515731	380
AX	16801000	4011097784861	380
AX	16801340	4011097883533	380
AX	16801820	4011097808314	380
AX	16810000	4011097509570	379
AX	16810340	4011097883670	379
AX	16810820	4011097515755	379
AX	16815000	4011097515779	378
AX	16815340	4011097883809	378
AX	16815820	4011097515786	378
AX	16820000	4011097513935	381
AX	16820340	4011097883939	381
AX	16820820	4011097515809	381
AX	16821000	4011097784854	381
AX	16821340	4011097884066	381
AX	16821820	4011097808307	381
AX	16823000	4011097809687	379
AX	16823340	4011097884202	379
AX	16823820	4011097809670	379
AX	16824000	4011097784847	378
AX	16824340	4011097884349	378
AX	16824820	4011097808291	378
AX	16830000	4011097513928	382
AX	16830340	4011097975092	382
AX	16830820	4011097515823	382
AX	16871000	4011097509518	382
AX	16871340	4011097884486	382
AX	16871820	4011097515847	382
AX	16872000	4011097784823	382
AX	16872340	4011097884615	382
AX	16872820	4011097808277	382
AX	16882000	4011097515885	377
AX	16882340	4011097884769	377
AX	16882820	4011097515892	377
AX	16883000	4011097784816	377
AX	16883340	4011097885018	377
AX	16883820	4011097808246	377
AX	16884000	4011097515915	376
AX	16884340	4011097885155	376
AX	16884820	4011097515922	376
AX	16930180	4059625032190	679
AX	16970180	4059625032404	679
AX	16973180	4059625032381	678
AX	16974180	4059625032398	678
AX	16982180	4059625032183	679
18			
AX	18010000	4011097519876	328
AX	18020000	4011097523002	328
AX	18310180	4059625036082	673
AX	18311180	4059625036099	673
AX	18312180	4059625037805	674
AX	18313180	4059625037812	674
AX	18355000	4059625032879	527
AX	18355140	4059625169025	527
AX	18355340	4059625169018	527
AX	18355820	4059625169056	527
AX	18355990	4059625169124	527
AX	18356000	4059625032862	527
AX	18356140	4059625180266	527
AX	18356340	4059625180259	527

brand	Code no.	EAN	page
AX	18356820	4059625180297	527
AX	18356990	4059625180365	527
AX	18357000	4059625032855	527
AX	18357140	4059625180419	527
AX	18357340	4059625180402	527
AX	18357820	4059625180440	527
AX	18357990	4059625180518	527
AX	18358000	4059625032848	528
AX	18450000	4011097529561	329
19			
AX	19418000	4011097664637	207
AX	19418140	4011097891590	207
AX	19418340	4011097891583	207
AX	19418820	4011097891620	348
AX	19418990	4011097891675	207
26			
AX	26020000	4011097726045	504
AX	26021000	4011097726052	439
AX	26022000	4011097726069	438
AX	26023000	4011097726076	467
AX	26025000	4011097726083	457
AX	26031000	4011097726090	438
AX	26032000	4011097726106	437
AX	26034000	4059625030165	435
AX	26034820	4059625030158	435
AX	26035000	4059625030134	435
AX	26035820	4059625030127	435
AX	26039180	4059625509555	97
AX	26050000	4011097822846	457
AX	26050140	4011097848419	457
AX	26050340	4011097848402	457
AX	26050670	4059625411834	457
AX	26050820	4011097848440	457
AX	26050990	4011097848518	457
AX	26051000	4011097822839	457
AX	26051670	4059625411827	457
AX	26431000	4059625030103	448
AX	26431140	4059625136355	448
AX	26431340	4059625136348	448
AX	26431670	4059625400197	448
AX	26431820	4059625030097	448
AX	26431990	4059625136430	448
AX	26432000	4059625030073	446
AX	26432140	4059625123270	446
AX	26432340	4059625123263	446
AX	26432670	4059625400319	446
AX	26432820	4059625030066	446
AX	26432990	4059625124154	446
AX	26433000	4059625030042	446
AX	26433140	4059625124208	446
AX	26433340	4059625124192	446
AX	26433670	4059625400340	446
AX	26433820	4059625030035	446
AX	26433990	4059625124284	446
AX	26434180	4059625032176	685
AX	26436000	4059625398852	448
AX	26436340	4059625402702	448
AX	26436670	4059625400357	448
AX	26437000	4059625400371	446
AX	26437340	4059625402757	446

brand	Code no.	EAN	page
AX	26437670	4059625400395	446
AX	26438000	4059625400418	446
AX	26438340	4059625402801	446
AX	26438670	4059625400425	446
AX	26909180	4011097734224	684
AX	26965000	4059625400456	446
AX	26965340	4059625402856	446
AX	26965670	4059625400470	446
AX	26966000	4059625399057	446
AX	26966340	4059625402900	446
AX	26966670	4059625399071	446
AX	26967000	4059625398807	448
AX	26967340	4059625402955	448
AX	26967670	4059625399095	448
27			
AX	27348000	4011097822822	449
AX	27348340	4011097892016	449
AX	27348820	4011097822815	449
AX	27451000	4011097265377	477
AX	27451140	4011097828695	477
AX	27451340	4011097828688	477
AX	27451820	4011097830025	477
AX	27451990	4011097830087	477
AX	27515000	4011097245201	474
AX	27515140	4011097830773	474
AX	27515340	4011097830766	474
AX	27515820	4011097536354	474
AX	27515990	4011097830865	474
AX	27830000	4011097484914	213
AX	27830140	4011097893303	213
AX	27830340	4011097893280	213
AX	27830820	4011097484921	469
AX	27830990	4011097893488	213
AX	27831000	4011097484891	269
AX	27831340	4011097893563	269
AX	27980000	4011097262574	212
AX	27980140	4011097894102	212
AX	27980340	4011097894089	212
AX	27980820	4011097894164	468
AX	27980990	4011097894300	212
AX	27982000	4011097523453	384
AX	27982340	4011097894683	384
AX	27982820	4011097526539	384
AX	27983000	4011097678023	212
AX	27983140	4011097894942	212
AX	27983340	4011097894935	212
AX	27983820	4011097894973	468
AX	27983990	4011097895048	212
AX	27984000	4059625025710	500
AX	27987000	4011097733098	470
AX	27987140	4011097846590	470
AX	27987340	4011097846576	470
AX	27987820	4011097846651	470
AX	27987990	4011097846798	470
AX	27989000	4011097398792	470
AX	27989140	4011097895376	470
AX	27989340	4011097895352	470
AX	27989820	4011097492711	470
AX	27989990	4011097895550	470
AX	27991000	4011097733104	268

brand	Code no.	EAN	page
AX	27991340	4011097895611	268
28			
AX	28011000	4059625206683	640
AX	28012000	4059625203019	638
AX	28014000	4059625206669	640
AX	28017000	4059625503485	83
AX	28017140	4059625555637	83
AX	28017340	4059625555644	83
AX	28017670	4059625555668	83
AX	28017820	4059625555651	83
AX	28017990	4059625555675	83
AX	28022000	4059625202999	638
AX	28112000	4011097523835	481
AX	28112340	4011097829036	481
AX	28112820	4011097523842	481
AX	28116000	4011097525556	481
AX	28116340	4011097826622	481
AX	28116820	4011097525563	481
AX	28120000	4011097525587	481
AX	28120340	4011097828909	481
AX	28120820	4011097525594	481
AX	28227000	4059625476765	478
AX	28227140	4059625476758	478
AX	28227250	4059625476741	478
AX	28227300	4059625476734	478
AX	28227310	4059625476727	478
AX	28227330	4059625476710	478
AX	28227340	4059625476703	478
AX	28227670	4059625476697	478
AX	28227700	4059625476680	478
AX	28227800	4059625476673	478
AX	28227820	4059625476666	478
AX	28227950	4059625476659	478
AX	28227990	4059625476642	478
AX	28228000	4059625477113	479
AX	28228140	4059625477090	479
AX	28228250	4059625477083	479
AX	28228300	4059625477076	479
AX	28228310	4059625477069	479
AX	28228330	4059625477052	479
AX	28228340	4059625477045	479
AX	28228670	4059625477021	479
AX	28228700	4059625477007	479
AX	28228800	4059625476987	479
AX	28228820	4059625476970	479
AX	28228950	4059625476963	479
AX	28228990	4059625476956	479
AX	28259000	4059625476369	478
AX	28259140	4059625476635	478
AX	28259250	4059625476628	478
AX	28259300	4059625476611	478
AX	28259310	4059625476604	478
AX	28259330	4059625476352	478
AX	28259340	4059625476345	478
AX	28259670	4059625476338	478
AX	28259700	4059625476321	478
AX	28259800	4059625476598	478
AX	28259820	4059625476581	478
AX	28259950	4059625476574	478
AX	28259990	4059625476567	478

brand	Code no.	EAN	page
AX	28261000	4059625476550	479
AX	28261140	4059625476871	479
AX	28261250	4059625476864	479
AX	28261300	4059625476857	479
AX	28261310	4059625476840	479
AX	28261330	4059625476543	479
AX	28261340	4059625476536	479
AX	28261670	4059625476529	479
AX	28261700	4059625476512	479
AX	28261800	4059625476802	479
AX	28261820	4059625476796	479
AX	28261950	4059625476789	479
AX	28261990	4059625476505	479
AX	28282000	4011097239156	481
AX	28282140	4011097840116	481
AX	28282340	4011097840109	481
AX	28282670	4059625294888	481
AX	28282700	4059625346587	481
AX	28282820	4011097665702	481
AX	28282990	4011097840208	481
AX	28284000	4011097239187	480
AX	28284140	4011097846873	480
AX	28284340	4011097846866	480
AX	28284820	4011097846903	480
AX	28284990	4011097846972	480
AX	28286000	4011097239163	481
AX	28286140	4011097847023	481
AX	28286340	4011097847016	481
AX	28286670	4059625413500	481
AX	28286700	4059625468890	481
AX	28286820	4011097701103	481
AX	28286990	4011097847115	481
AX	28290000	4059625476314	478
AX	28290140	4059625476307	478
AX	28290250	4059625476291	478
AX	28290300	4059625476284	478
AX	28290310	4059625476277	478
AX	28290330	4059625476260	478
AX	28290340	4059625476253	478
AX	28290670	4059625476246	478
AX	28290700	4059625476239	478
AX	28290800	4059625476222	478
AX	28290820	4059625476215	478
AX	28290950	4059625476208	478
AX	28290990	4059625472590	478
AX	28291000	4059625476499	479
AX	28291140	4059625476482	479
AX	28291250	4059625476475	479
AX	28291300	4059625476468	479
AX	28291310	4059625476451	479
AX	28291330	4059625476444	479
AX	28291340	4059625476437	479
AX	28291670	4059625476420	479
AX	28291700	4059625476413	479
AX	28291800	4059625476406	479
AX	28291820	4059625476390	479
AX	28291950	4059625476383	479
AX	28291990	4059625476376	479
AX	28464000	4011097554266	453
AX	28469000	4011097556963	453

brand	Code no.	EAN	page
AX	28474000	4011097434902	383
AX	28474340	4059625000687	383
AX	28474820	4011097509013	383
AX	28486180	4011097603308	686
AX	28487000	4011097404905	383
AX	28487340	4059625000281	383
AX	28487820	4011097509006	383
AX	28491000	4011097593784	453
AX	28494000	4011097434025	210
AX	28494140	4011097816401	210
AX	28494340	4011097814353	210
AX	28494820	4011097816135	443
AX	28494990	4011097816562	210
AX	28532000	4011097488516	211
AX	28532140	4011097820712	211
AX	28532340	4011097820705	211
AX	28532670	4059625346518	211
AX	28532820	4011097820743	456
AX	28532990	4011097820804	211
AX	28622000	4059625032145	480
AX	28622140	4059625153918	480
AX	28622340	4059625153895	480
AX	28622670	4059625427842	480
AX	28622820	4059625147801	480
AX	28622990	4059625154076	480
AX	28624000	4059625032169	480
AX	28624140	4059625154175	480
AX	28624340	4059625154151	480
AX	28624670	4059625427828	480
AX	28624820	4059625147825	480
AX	28624990	4059625154335	480
AX	28626000	4059625032152	480
AX	28626140	4059625153659	480
AX	28626340	4059625153635	480
AX	28626670	4059625427811	480
AX	28626820	4059625147849	480
AX	28626990	4059625153819	480
AX	28790000	4059625525067	95
AX	28790140	4059625543740	95
AX	28790340	4059625543757	95
AX	28790670	4059625543764	95
AX	28790820	4059625543771	95
AX	28790990	4059625543788	95
AX	28791000	4059625525043	95
AX	28791140	4059625543801	95
AX	28791340	4059625543795	95
AX	28791670	4059625543832	95
AX	28791820	4059625543849	95
AX	28791990	4059625543856	95
AX	28792000	4059625525074	96
AX	28792140	4059625543900	96
AX	28792340	4059625543894	96
AX	28792670	4059625543863	96
AX	28792820	4059625543887	96
AX	28792990	4059625543870	96
AX	28793000	4059625525081	95
AX	28793140	4059625543955	95
AX	28793340	4059625543948	95
AX	28793670	4059625543917	95
AX	28793820	4059625543931	95

Code Numbers (HG = hansgrohe, AX = AXOR)

brand	Code no.	EAN	page
AX	28793990	4059625543924	95
AX	28794000	4059625509579	96
AX	28794140	4059625544020	96
AX	28794340	4059625544013	96
AX	28794670	4059625542088	96
AX	28794820	4059625544006	96
AX	28794990	4059625542095	96
AX	28795000	4059625525302	96
AX	28795140	4059625544068	96
AX	28795340	4059625544051	96
AX	28795670	4059625544037	96
AX	28795820	4059625544044	96
AX	28795990	4059625544075	96
AX	28801000	4059625553770	97
AX	28801670	4059625584248	97
AX	28802000	4059625553756	98
AX	28802670	4059625584255	98
AX	28810000	4059625657539	94
AX	28810140	4059625758885	94
AX	28810340	4059625758861	94
AX	28810820	4059625758847	94
AX	28810990	4059625758830	94
29			
AX	29240000	4059625627273	463
AX	29240140	4059625756416	463
AX	29240340	4059625756423	463
AX	29240820	4059625756584	463
AX	29240990	4059625756591	463
AX	29241000	4059625627280	463
AX	29241140	4059625756607	463
AX	29241340	4059625756614	463
AX	29241820	4059625756638	463
AX	29241990	4059625756645	463
AX	29242000	4059625627297	464
AX	29242140	4059625756652	464
AX	29242340	4059625756669	464
AX	29242820	4059625756690	464
AX	29242990	4059625756706	464
AX	29243000	4059625628102	464
AX	29243140	4059625756713	464
AX	29243340	4059625756720	464
AX	29243820	4059625756744	464
AX	29243990	4059625756751	464
34			
AX	34420000	4011097559490	81
AX	34435000	4011097559841	84
AX	34620000	4011097559520	84
AX	34635000	4011097559728	85
AX	34705000	4011097559797	297
AX	34725000	4011097559803	298
AX	34820000	4011097688626	622
AX	34820800	4011097688633	622
AX	34822000	4011097688664	623
AX	34822800	4011097688671	623
35			
AX	35214000	4059625428733	451
AX	35214670	4059625428726	451
AX	35274000	4059625003671	433
AX	35276000	4059625003657	433
AX	35277000	4059625003640	434

brand	Code no.	EAN	page
AX	35278000	4059625003626	433
AX	35281000	4059625003565	434
AX	35282000	4059625003541	433
AX	35283000	4059625003527	432
AX	35284000	4059625184684	427
AX	35286000	4059625184967	428
AX	35287000	4059625185209	429
AX	35288000	4059625033296	685
AX	35296000	4059625184691	427
AX	35297000	4059625184974	428
AX	35298000	4059625185216	429
AX	35300000	4059625184707	427
AX	35300140	4059625239179	427
AX	35300340	4059625239162	427
AX	35300670	4059625428719	427
AX	35300820	4059625239209	427
AX	35300990	4059625239278	427
AX	35301000	4059625184981	428
AX	35301140	4059625240816	428
AX	35301340	4059625240809	428
AX	35301670	4059625428696	428
AX	35301820	4059625240847	428
AX	35301990	4059625240915	428
AX	35302000	4059625185223	429
AX	35302140	4059625237922	429
AX	35302340	4059625237915	429
AX	35302670	4059625428672	429
AX	35302820	4059625237953	429
AX	35302990	4059625238035	429
AX	35303000	4059625184950	427
AX	35303140	4059625239322	427
AX	35303340	4059625239315	427
AX	35303670	4059625428665	427
AX	35303820	4059625239353	427
AX	35303990	4059625239421	427
AX	35304000	4059625184998	428
AX	35304140	4059625240960	428
AX	35304340	4059625240953	428
AX	35304670	4059625428641	428
AX	35304820	4059625240991	428
AX	35304990	4059625241066	428
AX	35305000	4059625185230	429
AX	35305140	4059625238080	429
AX	35305340	4059625238073	429
AX	35305670	4059625428634	429
AX	35305820	4059625238110	429
AX	35305990	4059625238189	429
AX	35306000	4059625185247	430
AX	35308000	4059625185285	431
AX	35309000	4059625185322	432
AX	35310000	4059625185254	430
AX	35312000	4059625185292	431
AX	35313000	4059625185339	432
AX	35314000	4059625185261	430
AX	35314140	4059625238561	430
AX	35314340	4059625238554	430
AX	35314820	4059625238592	430
AX	35314990	4059625238660	430
AX	35316000	4059625185308	431
AX	35316140	4059625239896	431

brand	Code no.	EAN	page
AX	35316340	4059625239889	431
AX	35316820	4059625240229	431
AX	35316990	4059625240298	431
AX	35317000	4059625185346	432
AX	35317140	4059625237298	432
AX	35317340	4059625237281	432
AX	35317820	4059625237328	432
AX	35317990	4059625237397	432
AX	35318000	4059625185278	430
AX	35318140	4059625238714	430
AX	35318340	4059625238707	430
AX	35318820	4059625238745	430
AX	35318990	4059625238813	430
AX	35320000	4059625185315	431
AX	35320140	4059625240342	431
AX	35320340	4059625240335	431
AX	35320820	4059625240373	431
AX	35320990	4059625240441	431
AX	35321000	4059625185353	432
AX	35321140	4059625237458	432
AX	35321340	4059625237441	432
AX	35321820	4059625237489	432
AX	35321990	4059625237557	432
AX	35361180	4059625184639	683
AX	35363180	4059625184646	684
AX	35373000	4059625405147	439
AX	35373340	4059625415009	439
AX	35373670	4059625415276	439
AX	35374000	4059625405154	439
AX	35374340	4059625414798	439
AX	35374670	4059625415269	439
AX	35380000	4059625405208	442
AX	35380340	4059625414781	442
AX	35380670	4059625415252	442
AX	35381000	4059625405215	442
AX	35381340	4059625414774	442
AX	35381670	4059625415245	442
AX	35382000	4059625405178	441
AX	35382340	4059625414767	441
AX	35382670	4059625415238	441
AX	35383000	4059625405185	440
AX	35383340	4059625414750	440
AX	35383670	4059625415221	440
AX	35387000	4059625405161	439
AX	35387340	4059625414743	439
AX	35387670	4059625415214	439
AX	35388000	4059625405192	441
AX	35388340	4059625414736	441
AX	35388670	4059625415207	441
AX	35389000	4059625405222	442
AX	35389340	4059625414729	442
AX	35389670	4059625415191	442
36			
AX	36100000	4011097751573	283
AX	36100140	4011097817187	283
AX	36100340	4011097817170	283
AX	36100670	4059625427507	283
AX	36101000	4011097751566	283
AX	36101140	4011097818139	283
AX	36101340	4011097818122	283

brand	Code no.	EAN	page
AX	36101670	4059625427477	283
AX	36101800	4011097818184	283
AX	36102000	4011097751559	282
AX	36102140	4011097818283	282
AX	36102340	4011097818276	282
AX	36103000	4011097751542	284
AX	36103140	4011097817989	284
AX	36103340	4011097817972	284
AX	36104000	4011097751535	284
AX	36104140	4011097818634	284
AX	36104340	4011097818627	284
AX	36104670	4059625427460	284
AX	36105000	4011097751528	284
AX	36105140	4011097903354	284
AX	36105340	4011097903347	284
AX	36106000	4011097751511	285
AX	36106140	4011097825946	285
AX	36106340	4011097825939	285
AX	36106670	4059625427422	285
AX	36107000	4011097751504	287
AX	36107140	4011097826943	287
AX	36107340	4011097826936	287
AX	36107670	4059625427392	287
AX	36108000	4011097751498	286
AX	36108140	4011097819150	286
AX	36108340	4011097819143	286
AX	36108670	4059625427361	286
AX	36110000	4011097755946	284
AX	36110140	4011097819457	284
AX	36110340	4011097819440	284
AX	36110670	4059625427330	284
AX	36111000	4011097755953	284
AX	36111140	4011097819709	284
AX	36111340	4011097819594	284
AX	36111670	4059625427309	284
AX	36112000	4011097755960	282
AX	36112140	4011097903507	282
AX	36112340	4011097903491	282
AX	36113000	4011097755977	284
AX	36113140	4011097903651	284
AX	36113340	4059625091708	284
AX	36113670	4059625426982	284
AX	36114000	4011097751603	285
AX	36114140	4011097826790	285
AX	36114340	4011097826783	285
AX	36115000	4011097751580	287
AX	36115140	4011097827094	287
AX	36115340	4011097827087	287
AX	36116000	4011097751597	286
AX	36116140	4011097819303	286
AX	36116340	4011097819297	286
AX	36120000	4011097751467	288
AX	36120140	4011097818788	288
AX	36120340	4011097818771	288
AX	36120670	4059625426968	288
AX	36121000	4011097755984	288
AX	36121140	4059625091685	288
AX	36121340	4011097903798	288
AX	36130000	4011097785134	288
AX	36130140	4011097903958	288

Code Numbers (HG = hansgrohe, AX = AXOR)

brand	Code no.	EAN	page
AX	36130340	4011097903941	288
AX	36130670	4059625428627	288
AX	36140000	4011097751443	293
AX	36140140	4011097904108	293
AX	36140340	4011097904092	293
AX	36410000	4011097751429	292
AX	36410140	4011097904405	292
AX	36410340	4011097904399	292
AX	36410670	4059625435625	292
AX	36411000	4011097751412	292
AX	36411140	4011097904559	292
AX	36411340	4011097904542	292
AX	36411670	4059625435298	292
AX	36412000	4011097751405	291
AX	36412140	4011097904702	291
AX	36412340	4011097904696	291
AX	36416000	4011097751399	289
AX	36416140	4011097814209	289
AX	36416340	4011097814094	289
AX	36416670	4059625426944	289
AX	36425000	4011097751382	289
AX	36425140	4011097904856	289
AX	36425340	4011097904849	289
AX	36425670	4059625427668	289
AX	36455000	4011097815800	290
AX	36455140	4011097905006	290
AX	36455340	4011097904993	290
AX	36455670	4059625427644	290
AX	36457000	4011097815794	290
AX	36457140	4011097905150	290
AX	36457340	4011097905143	290
AX	36655000	4011097815770	293
AX	36655140	4011097905303	293
AX	36655340	4011097905297	293
AX	36655670	4059625427620	293
AX	36701180	4011097755588	676
AX	36702000	4011097755571	295
AX	36702140	4011097905457	295
AX	36702340	4011097905440	295
AX	36702670	4059625427606	295
AX	36703000	4011097755564	294
AX	36703140	4011097905600	294
AX	36703340	4011097905594	294
AX	36703670	4059625427583	294
AX	36704000	4011097755557	295
AX	36704140	4011097905754	295
AX	36704340	4011097905747	295
AX	36704670	4059625427569	295
AX	36708180	4011097755519	676
AX	36724000	4011097755496	300
AX	36724140	4011097821009	300
AX	36724340	4011097820996	300
AX	36724670	4059625427095	300
AX	36724820	4011097821030	460
AX	36724990	4011097821108	300
AX	36733000	4059625031957	460
AX	36733340	4059625434727	460
AX	36733670	4059625435649	460
AX	36734000	4059625031933	460
AX	36734340	4059625434819	460

brand	Code no.	EAN	page
AX	36734670	4059625435663	460
AX	36735000	4011097755472	300
AX	36735140	4011097821160	300
AX	36735340	4011097821153	300
AX	36735820	4011097848747	471
AX	36735990	4011097821252	300
AX	36736000	4011097789330	301
AX	36736140	4011097907253	301
AX	36736340	4011097907246	301
AX	36736820	4011097801346	472
AX	36736990	4011097907345	301
AX	36737000	4059625626610	476
AX	36737140	4059625680827	476
AX	36737340	4059625680810	476
AX	36737670	4059625680803	476
AX	36737700	4059625680797	476
AX	36737820	4059625680780	476
AX	36737990	4059625680773	476
AX	36738000	4059625626627	476
AX	36738140	4059625680766	476
AX	36738340	4059625680759	476
AX	36738670	4059625680742	476
AX	36738700	4059625680735	476
AX	36738820	4059625680728	476
AX	36738990	4059625680711	476
AX	36739000	4059625626634	476
AX	36739140	4059625680704	476
AX	36739340	4059625680698	476
AX	36739670	4059625680681	476
AX	36739700	4059625680674	476
AX	36739820	4059625680667	476
AX	36739990	4059625680650	476
AX	36750000	4059625539705	519
AX	36750140	4059625552469	519
AX	36750340	4059625552452	519
AX	36750670	4059625552445	519
AX	36750700	4059625552438	519
AX	36750820	4059625552421	519
AX	36750990	4059625552414	519
AX	36751000	4059625539712	520
AX	36751140	4059625552407	520
AX	36751340	4059625552391	520
AX	36751670	4059625552384	520
AX	36751700	4059625552377	520
AX	36751820	4059625552360	520
AX	36751990	4059625552353	520
AX	36752000	4059625539729	519
AX	36752140	4059625552346	519
AX	36752340	4059625552339	519
AX	36752670	4059625552322	519
AX	36752820	4059625552315	519
AX	36752990	4059625552308	519
AX	36753000	4059625539736	520
AX	36753140	4059625551691	520
AX	36753340	4059625551684	520
AX	36753670	4059625552667	520
AX	36753820	4059625552650	520
AX	36753990	4059625552643	520
AX	36754000	4059625539743	88
AX	36754140	4059625552636	88

brand	Code no.	EAN	page
AX	36754340	4059625552629	88
AX	36754670	4059625552612	88
AX	36754820	4059625552605	88
AX	36754990	4059625552599	88
AX	36755000	4059625539750	89
AX	36755140	4059625552582	89
AX	36755340	4059625552575	89
AX	36755670	4059625552568	89
AX	36755820	4059625552551	89
AX	36755990	4059625552544	89
AX	36756000	4059625539767	518
AX	36756140	4059625552537	518
AX	36756340	4059625552520	518
AX	36756670	4059625552513	518
AX	36756700	4059625552506	518
AX	36756820	4059625552490	518
AX	36756990	4059625552483	518
AX	36757000	4059625539774	518
AX	36757140	4059625552476	518
AX	36757340	4059625552841	518
AX	36757670	4059625552834	518
AX	36757820	4059625552827	518
AX	36757990	4059625552810	518
AX	36758000	4059625539781	87
AX	36758140	4059625552803	87
AX	36758340	4059625552797	87
AX	36758670	4059625552780	87
AX	36758820	4059625552773	87
AX	36758990	4059625552766	87
AX	36759000	4059625539798	521
AX	36759140	4059625552759	521
AX	36759340	4059625552742	521
AX	36759670	4059625552735	521
AX	36759700	4059625552728	521
AX	36759820	4059625552711	521
AX	36759990	4059625552704	521
AX	36770180	4011097755465	677
AX	36771000	4011097755458	296
AX	36771140	4011097907390	296
AX	36771340	4011097907383	296
AX	36771670	4059625427545	296
AX	36772000	4011097755441	297
AX	36772140	4011097907543	297
AX	36772340	4011097907536	297
AX	36772670	4059625427521	297
AX	36774000	4059625539804	521
AX	36774140	4059625552698	521
AX	36774340	4059625552681	521
AX	36774670	4059625552674	521
AX	36774820	4059625553046	521
AX	36774990	4059625553039	521
AX	36775000	4059625539811	90
AX	36775140	4059625553022	90
AX	36775340	4059625553015	90
AX	36775670	4059625553008	90
AX	36775820	4059625552995	90
AX	36775990	4059625552988	90
AX	36776000	4059625539828	523
AX	36776140	4059625552971	523
AX	36776340	4059625552964	523

brand	Code no.	EAN	page
AX	36776670	4059625552957	523
AX	36776700	4059625552940	523
AX	36776820	4059625552933	523
AX	36776990	4059625552926	523
AX	36777000	4059625539835	523
AX	36777140	4059625552919	523
AX	36777340	4059625552902	523
AX	36777670	4059625552896	523
AX	36777820	4059625552889	523
AX	36777990	4059625552872	523
AX	36778000	4059625539842	91
AX	36778140	4059625552865	91
AX	36778340	4059625552858	91
AX	36778670	4059625553237	91
AX	36778820	4059625553220	91
AX	36778990	4059625553213	91
AX	36779000	4059625539859	525
AX	36779140	4059625553206	525
AX	36779340	4059625553190	525
AX	36779670	4059625553183	525
AX	36779700	4059625553176	525
AX	36779820	4059625553169	525
AX	36779990	4059625553152	525
AX	36780000	4059625539866	525
AX	36780140	4059625553145	525
AX	36780340	4059625553138	525
AX	36780670	4059625553121	525
AX	36780820	4059625553114	525
AX	36780990	4059625553107	525
AX	36781000	4059625539873	92
AX	36781140	4059625553091	92
AX	36781340	4059625553084	92
AX	36781670	4059625553077	92
AX	36781820	4059625553060	92
AX	36781990	4059625553053	92
AX	36822000	4011097755427	299
AX	36822140	4011097848877	299
AX	36822340	4011097848860	299
38			
AX	38010000	4011097806518	591
AX	38010670	4059625338216	591
AX	38010700	4059625468791	591
AX	38010820	4059625020234	591
AX	38112000	4011097412979	344
AX	38112340	4011097909486	344
AX	38112820	4011097909523	344
AX	38113000	4011097413051	343
AX	38113340	4011097841731	343
AX	38113820	4011097841854	343
AX	38115000	4011097413013	344
AX	38115340	4011097909639	344
AX	38115820	4011097909677	344
AX	38116000	4011097413099	343
AX	38116340	4011097842165	343
AX	38116820	4011097842202	343
AX	38119000	4011097677873	589
AX	38119340	4011097909783	589
AX	38119670	4059625366066	589
AX	38119700	4059625468784	589
AX	38119820	4011097909820	589

brand	Code no.	EAN	page
AX	38120000	4011097677880	589
AX	38120340	4011097909936	589
AX	38120670	4059625366073	589
AX	38120700	4059625468777	589
AX	38120820	4011097909974	589
AX	38130000	4011097366142	203
AX	38130340	4011097910086	203
AX	38130820	4011097910123	342
AX	38411000	4011097849317	351
AX	38411340	4059625019283	351
AX	38411670	4059625331781	351
AX	38411700	4059625468760	351
AX	38411820	4011097989556	351
AX	38412000	4011097849300	350
AX	38412340	4059625019412	350
AX	38412670	4059625331774	350
AX	38412700	4059625468753	350
AX	38412820	4011097989518	350
AX	38700000	4011097345116	354
AX	38700340	4011097912141	354
AX	38700820	4011097912172	354
AX	38715000	4011097478456	353
AX	38715340	4011097912271	353
AX	38715820	4011097912318	353
AX	38720000	4011097345130	354
AX	38720340	4011097912424	354
AX	38720820	4011097912455	354
AX	38815000	4011097688701	623
AX	38815340	4011097876047	623
AX	38815800	4011097688718	623
AX	38933000	4011097331164	355
AX	38933340	4011097912950	355
AX	38933820	4011097912981	355
AX	38959000	4011097705101	688
AX	38960000	4011097704647	688
AX	38976000	4011097331133	355
AX	38976340	4011097913087	355
AX	38976820	4011097913117	355
39			
AX	39001000	4059625358030	246
AX	39001340	4059625372456	246
AX	39010000	4011097391274	247
AX	39010340	4011097913230	247
AX	39015000	4011097391281	246
AX	39015340	4011097913681	246
AX	39018000	4011097485461	247
AX	39018340	4011097914114	247
AX	39020000	4011097480640	248
AX	39020340	4011097914268	248
AX	39021000	4059625329337	249
AX	39021340	4059625373149	249
AX	39022000	4059625329290	246
AX	39022340	4059625372517	246
AX	39023000	4059625329276	248
AX	39023340	4059625372906	248
AX	39024000	4059625329245	248
AX	39024340	4059625373026	248
AX	39031000	4011097648910	247
AX	39031340	4011097914411	247
AX	39032000	4011097648927	248

brand	Code no.	EAN	page
AX	39032340	4011097914565	248
AX	39034000	4011097648941	249
AX	39034340	4059625211700	249
AX	39035000	4011097648903	246
AX	39035340	4011097914718	246
AX	39037000	4011097646626	249
AX	39071000	4059625358047	248
AX	39071340	4059625372968	248
AX	39081000	4059625358054	248
AX	39081340	4059625373088	248
AX	39112000	4011097488608	250
AX	39112340	4011097914862	250
AX	39113000	4011097488622	251
AX	39113340	4011097915012	251
AX	39115000	4011097488646	250
AX	39115340	4011097915166	250
AX	39116000	4011097488660	251
AX	39116340	4011097915319	251
AX	39117000	4011097677897	588
AX	39117340	4011097915463	588
AX	39118000	4011097678009	588
AX	39118340	4011097915616	588
AX	39119000	4059625329221	250
AX	39119340	4059625373279	250
AX	39121000	4059625329191	251
AX	39121340	4059625373491	251
AX	39133000	4011097400563	253
AX	39133340	4011097915760	253
AX	39134000	4011097400587	252
AX	39134340	4011097915913	252
AX	39135000	4011097400600	253
AX	39135340	4011097916057	253
AX	39136000	4011097400624	252
AX	39136340	4011097916194	252
AX	39143000	4011097400686	254
AX	39143340	4011097916347	254
AX	39144000	4011097400709	253
AX	39144340	4011097916491	253
AX	39147000	4011097400365	254
AX	39147340	4011097916644	254
AX	39148000	4011097400389	253
AX	39148340	4011097916798	253
AX	39151000	4059625358061	249
AX	39151340	4059625373200	249
AX	39171000	4059625358078	250
AX	39171340	4059625373439	250
AX	39181000	4059625358719	251
AX	39181340	4059625373552	251
AX	39201000	4059625358726	255
AX	39201340	4059625373675	255
AX	39210000	4011097648958	255
AX	39210340	4011097917245	255
AX	39214000	4059625329160	255
AX	39214340	4059625373613	255
AX	39313000	4011097400648	254
AX	39313340	4011097917399	254
AX	39314000	4011097400662	253
AX	39314340	4011097998909	253
AX	39315000	4011097400723	254
AX	39315340	4011097917542	254

brand	Code no.	EAN	page
AX	39410000	4011097400761	259
AX	39410340	4011097917993	259
AX	39436000	4011097650852	261
AX	39436340	4011097918143	261
AX	39440000	4059625329146	256
AX	39440340	4059625373736	256
AX	39441000	4011097488769	258
AX	39441340	4011097918297	258
AX	39442000	4011097488783	258
AX	39442340	4011097918440	258
AX	39445000	4011097400785	261
AX	39445340	4011097918594	261
AX	39446000	4011097400808	261
AX	39446340	4011097918747	261
AX	39447000	4011097488806	258
AX	39447340	4011097918891	258
AX	39448000	4011097488820	258
AX	39448340	4011097919041	258
AX	39451000	4011097545691	256
AX	39451340	4011097919195	256
AX	39453000	4011097399638	262
AX	39453340	4011097919348	262
AX	39454000	4011097400846	262
AX	39454340	4011097919492	262
AX	39455000	4011097400501	257
AX	39455340	4011097919645	257
AX	39457000	4011097400525	257
AX	39457340	4011097919799	257
AX	39471000	4059625358733	256
AX	39471340	4059625373798	256
AX	39480000	4011097488844	259
AX	39480340	4011097919942	259
AX	39482000	4011097488868	259
AX	39482340	4011097920092	259
AX	39525000	4011097488882	264
AX	39525140	4011097920252	264
AX	39525340	4011097920245	264
AX	39525820	4011097560526	475
AX	39525990	4011097920344	264
AX	39655000	4011097400891	263
AX	39655340	4011097920689	263
AX	39700000	4011097400983	265
AX	39700340	4011097920986	265
AX	39705000	4011097400969	265
AX	39705340	4011097921136	265
AX	39711000	4011097478388	264
AX	39711340	4011097921280	264
AX	39716000	4011097478470	264
AX	39716340	4011097921433	264
AX	39720000	4011097401027	266
AX	39720340	4011097921587	266
AX	39725000	4011097401003	266
AX	39725340	4011097921730	266
AX	39745000	4059625627013	417
AX	39745140	4059625627051	417
AX	39745340	4059625627044	417
AX	39745820	4059625627037	417
AX	39745990	4059625627020	417
AX	39746000	4059625627068	417
AX	39746140	4059625627303	417

brand	Code no.	EAN	page
AX	39746340	4059625627099	417
AX	39746820	4059625627082	417
AX	39746990	4059625627075	417
AX	39748000	4059625627310	418
AX	39748140	4059625627358	418
AX	39748340	4059625627341	418
AX	39748820	4059625627334	418
AX	39748990	4059625627327	418
AX	39749000	4059625627365	417
AX	39749140	4059625627402	417
AX	39749340	4059625627396	417
AX	39749820	4059625627389	417
AX	39749990	4059625627372	417
AX	39754000	4059625627419	418
AX	39754140	4059625627457	418
AX	39754340	4059625627440	418
AX	39754820	4059625627433	418
AX	39754990	4059625627426	418
AX	39755000	4059625627464	418
AX	39755140	4059625627501	418
AX	39755340	4059625627495	418
AX	39755820	4059625627488	418
AX	39755990	4059625627471	418
AX	39757000	4059625627563	419
AX	39757140	4059625627600	419
AX	39757340	4059625627594	419
AX	39757820	4059625627587	419
AX	39757990	4059625627570	419
AX	39758000	4059625627617	419
AX	39758140	4059625627655	419
AX	39758340	4059625627648	419
AX	39758820	4059625627631	419
AX	39758990	4059625627624	419
AX	39760000	4059625627662	419
AX	39760140	4059625627709	419
AX	39760340	4059625627693	419
AX	39760820	4059625627686	419
AX	39760990	4059625627679	419
AX	39761000	4059625627716	419
AX	39761140	4059625627754	419
AX	39761340	4059625627747	419
AX	39761820	4059625627730	419
AX	39761990	4059625627723	419
AX	39763000	4059625627761	420
AX	39763140	4059625627808	420
AX	39763340	4059625627792	420
AX	39763820	4059625627785	420
AX	39763990	4059625627778	420
AX	39764000	4059625627815	420
AX	39764140	4059625627853	420
AX	39764340	4059625627846	420
AX	39764820	4059625627839	420
AX	39764990	4059625627822	420
AX	39766180	4059625628003	683
AX	39767000	4059625628010	445
AX	39767140	4059625717929	445
AX	39767340	4059625628041	445
AX	39767820	4059625628034	445
AX	39767990	4059625628027	445
AX	39768000	4059625627228	445

brand	Code no.	EAN	page
AX	39768140	4059625627266	445
AX	39768340	4059625627259	445
AX	39768820	4059625627242	445
AX	39768990	4059625627235	445
AX	39769000	4059625656341	449
AX	39769140	4059625756867	449
AX	39769340	4059625756812	449
AX	39769820	4059625756799	449
AX	39769990	4059625756768	449
AX	39770000	4059625627518	418
AX	39770140	4059625627556	418
AX	39770340	4059625627549	418
AX	39770820	4059625627532	418
AX	39770990	4059625627525	418
AX	39771000	4059625627860	420
AX	39771140	4059625627907	420
AX	39771340	4059625627891	420
AX	39771820	4059625627884	420
AX	39771990	4059625627877	420
AX	39772000	4059625745618	454
AX	39772140	4059625757017	454
AX	39772340	4059625757000	454
AX	39772820	4059625756997	454
AX	39772990	4059625756980	454
AX	39773000	4059625745625	454
AX	39773140	4059625756973	454
AX	39773340	4059625756966	454
AX	39773820	4059625756959	454
AX	39773990	4059625756942	454
AX	39774000	4059625744093	454
AX	39774140	4059625756935	454
AX	39774340	4059625756928	454
AX	39774820	4059625756911	454
AX	39774990	4059625756904	454
AX	39832000	4059625196779	621
AX	39832670	4059625440520	621
AX	39832800	4059625304105	621
AX	39835000	4011097518763	621
AX	39835340	4011097842462	621
AX	39835670	4059625427255	621
AX	39835800	4011097527215	621
AX	39840000	4011097518770	622
AX	39840800	4011097520506	622
AX	39850000	4011097518756	621
AX	39850340	4011097922027	621
AX	39850800	4011097519012	621
AX	39860000	4011097783277	620
AX	39860340	4011097922164	620
AX	39860800	4011097783284	620
AX	39861000	4011097783291	620
AX	39861340	4011097922300	620
AX	39861670	4059625427224	620
AX	39861800	4011097783307	620
AX	39862000	4059625176320	619
AX	39862340	4059625202388	619
AX	39862670	4059625427187	619
AX	39862800	4059625176306	619
AX	39863000	4059625257890	619
AX	39863340	4059625293775	619
AX	39863670	4059625427163	619
AX	39863800	4059625257906	619
AX	39882000	4011097401140	268
AX	39882340	4011097922454	268
AX	39883000	4011097401126	268
AX	39883340	4011097922751	268
AX	39920000	4011097401102	267
AX	39920340	4011097923048	267
AX	39925000	4011097401089	267
AX	39925340	4011097923192	267
AX	39960000	4011097401065	266
AX	39960340	4011097923345	266
AX	39965000	4011097401041	266
AX	39965340	4011097923499	266
40			
AX	40872000	4011097594002	531
AX	40873000	4011097594217	531
AX	40877180	4011097601755	687
AX	40878180	4011097601748	686
42			
AX	42000000	4059625450475	602
AX	42000140	4059625490853	602
AX	42000340	4059625490846	602
AX	42000670	4059625490839	602
AX	42001000	4059625450451	602
AX	42001140	4059625490822	602
AX	42001340	4059625490815	602
AX	42001670	4059625490808	602
AX	42002000	4059625450437	603
AX	42002140	4059625490792	603
AX	42002340	4059625490785	603
AX	42002670	4059625490778	603
AX	42003000	4059625450413	603
AX	42003140	4059625490761	603
AX	42003340	4059625490754	603
AX	42003670	4059625490747	603
AX	42004000	4059625450390	603
AX	42004140	4059625490730	603
AX	42004340	4059625490723	603
AX	42004670	4059625490716	603
AX	42005000	4059625450376	604
AX	42005140	4059625490709	604
AX	42005340	4059625490297	604
AX	42005670	4059625490280	604
AX	42006000	4059625450352	604
AX	42006140	4059625490273	604
AX	42006340	4059625490266	604
AX	42006670	4059625490259	604
AX	42018000	4059625131640	626
AX	42018330	4059625297421	626
AX	42018340	4059625297414	626
AX	42018800	4059625131657	626
AX	42019000	4011097516127	575
AX	42019340	4011097936970	575
AX	42019820	4011097516134	575
AX	42020000	4011097516158	576
AX	42020340	4011097937229	576
AX	42020820	4011097516165	576
AX	42021000	4011097516189	577
AX	42021340	4011097937366	577
AX	42021820	4011097516196	577

brand	Code no.	EAN	page
AX	42028000	4011097516219	578
AX	42028340	4011097937618	578
AX	42028820	4011097516226	578
AX	42033000	4011097516271	575
AX	42033340	4011097938011	575
AX	42033820	4011097516288	575
AX	42035000	4011097516332	579
AX	42035340	4011097938271	579
AX	42035820	4011097516349	579
AX	42036000	4011097516363	578
AX	42036340	4011097938530	578
AX	42036820	4011097516370	578
AX	42060000	4011097516400	577
AX	42060340	4011097939056	577
AX	42060820	4011097516417	577
AX	42065000	4011097516431	576
AX	42065340	4011097939315	576
AX	42065820	4011097516448	576
AX	42066000	4011097516462	576
AX	42066340	4011097939575	576
AX	42066820	4011097516479	576
AX	42080000	4011097516493	577
AX	42080340	4011097939834	577
AX	42080820	4011097516509	577
AX	42090000	4011097516523	579
AX	42090340	4011097940083	579
AX	42090820	4011097516530	579
AX	42134000	4011097516554	575
AX	42134340	4011097940229	575
AX	42134820	4011097516561	575
AX	42137000	4011097516585	577
AX	42137340	4011097940489	577
AX	42137820	4011097516592	577
AX	42300000	4011097535302	329
AX	42305000	4011097535319	328
AX	42436000	4011097598789	573
AX	42520000	4059625480212	632
AX	42520140	4059625480182	632
AX	42520340	4059625480168	632
AX	42520670	4059625480137	632
AX	42520700	4059625480106	632
AX	42520800	4059625480076	632
AX	42520990	4059625480045	632
AX	42521000	4059625480021	632
AX	42521140	4059625479995	632
AX	42521340	4059625479971	632
AX	42521670	4059625479940	632
AX	42521700	4059625479919	632
AX	42521800	4059625469224	632
AX	42521990	4059625479865	632
AX	42522000	4059625479841	632
AX	42522140	4059625479810	632
AX	42522340	4059625479780	632
AX	42522670	4059625479759	632
AX	42522700	4059625480694	632
AX	42522800	4059625454824	632
AX	42522990	4059625480649	632
AX	42523000	4059625480625	633
AX	42523140	4059625480595	633
AX	42523340	4059625480571	633

brand	Code no.	EAN	page
AX	42523670	4059625480540	633
AX	42523700	4059625480519	633
AX	42523800	4059625458754	633
AX	42523990	4059625480465	633
AX	42524000	4059625480441	633
AX	42524140	4059625480410	633
AX	42524340	4059625480397	633
AX	42524670	4059625480366	633
AX	42524700	4059625480335	633
AX	42524800	4059625480304	633
AX	42524990	4059625480274	633
AX	42525000	4059625480250	634
AX	42525140	4059625480229	634
AX	42525340	4059625481172	634
AX	42525670	4059625481141	634
AX	42525700	4059625481110	634
AX	42525800	4059625481080	634
AX	42525990	4059625481059	634
AX	42526000	4059625481035	634
AX	42526140	4059625481004	634
AX	42526340	4059625480984	634
AX	42526670	4059625480953	634
AX	42526700	4059625480922	634
AX	42526800	4059625469217	634
AX	42526990	4059625480878	634
AX	42527000	4059625480854	634
AX	42527140	4059625480823	634
AX	42527340	4059625480809	634
AX	42527670	4059625480779	634
AX	42527700	4059625480748	634
AX	42527800	4059625480717	634
AX	42527990	4059625481660	634
AX	42528000	4059625481646	635
AX	42528140	4059625481615	635
AX	42528340	4059625481592	635
AX	42528670	4059625481561	635
AX	42528700	4059625481530	635
AX	42528800	4059625454831	635
AX	42528990	4059625481486	635
AX	42529000	4059625481462	635
AX	42529140	4059625481431	635
AX	42529340	4059625481417	635
AX	42529670	4059625481387	635
AX	42529700	4059625481356	635
AX	42529800	4059625481325	635
AX	42529990	4059625481295	635
AX	42530000	4059625604489	581
AX	42530140	4059625604472	581
AX	42530340	4059625604427	581
AX	42530670	4059625604410	581
AX	42530700	4059625604403	581
AX	42530820	4059625604380	581
AX	42530990	4059625604366	581
AX	42540000	4059625711767	636
AX	42540140	4059625756126	636
AX	42540340	4059625756119	636
AX	42540670	4059625756102	636
AX	42540700	4059625756096	636
AX	42541000	4059625711774	637
AX	42541140	4059625756089	637

brand	Code no.	EAN	page
AX	42541340	4059625756072	637
AX	42541670	4059625756065	637
AX	42541700	4059625756058	637
AX	42542000	4059625711781	636
AX	42542140	4059625756041	636
AX	42542340	4059625756034	636
AX	42542670	4059625756027	636
AX	42542700	4059625756010	636
AX	42604000	4059625422502	552
AX	42604140	4059625422489	552
AX	42604340	4059625422434	552
AX	42604670	4059625422410	552
AX	42604820	4059625422380	552
AX	42604990	4059625422359	552
AX	42605000	4059625422335	552
AX	42605140	4059625422311	552
AX	42605340	4059625422267	552
AX	42605670	4059625422243	552
AX	42605820	4059625422212	552
AX	42605990	4059625422182	552
AX	42610000	4059625422168	552
AX	42610140	4059625422144	552
AX	42610340	4059625421895	552
AX	42610670	4059625421871	552
AX	42610820	4059625421840	552
AX	42610990	4059625423004	552
AX	42611000	4059625422984	554
AX	42611140	4059625422960	554
AX	42611340	4059625422915	554
AX	42611670	4059625422892	554
AX	42611820	4059625422861	554
AX	42611990	4059625422830	554
AX	42613000	4059625422816	553
AX	42613140	4059625422793	553
AX	42613340	4059625422748	553
AX	42613670	4059625422724	553
AX	42613820	4059625422694	553
AX	42613990	4059625422663	553
AX	42622000	4059625422649	553
AX	42622140	4059625422625	553
AX	42622340	4059625422571	553
AX	42622670	4059625422557	553
AX	42622820	4059625422526	553
AX	42622990	4059625423493	553
AX	42623000	4059625423479	554
AX	42623140	4059625423455	554
AX	42623340	4059625423400	554
AX	42623670	4059625423387	554
AX	42623820	4059625423356	554
AX	42623990	4059625423325	554
AX	42626000	4059625423301	553
AX	42626140	4059625423288	553
AX	42626340	4059625423233	553
AX	42626670	4059625423219	553
AX	42626820	4059625423189	553
AX	42626990	4059625423158	553
AX	42639000	4059625423134	555
AX	42639140	4059625423110	555
AX	42639340	4059625423066	555
AX	42639670	4059625423042	555

brand	Code no.	EAN	page
AX	42639820	4059625423011	555
AX	42639990	4059625423981	555
AX	42644000	4059625423967	555
AX	42644140	4059625423943	555
AX	42644340	4059625423899	555
AX	42644670	4059625423875	555
AX	42644820	4059625423844	555
AX	42644990	4059625423813	555
AX	42649000	4059625423790	557
AX	42649140	4059625423776	557
AX	42649340	4059625423721	557
AX	42649670	4059625423707	557
AX	42649820	4059625423677	557
AX	42649990	4059625423646	557
AX	42654000	4059625423622	556
AX	42654140	4059625423608	556
AX	42654340	4059625423554	556
AX	42654670	4059625423530	556
AX	42654820	4059625424506	556
AX	42654990	4059625424476	556
AX	42655000	4059625424452	557
AX	42655140	4059625424438	557
AX	42655340	4059625424384	557
AX	42655670	4059625424360	557
AX	42655820	4059625424339	557
AX	42655990	4059625424308	557
AX	42656000	4059625424285	556
AX	42656140	4059625424261	556
AX	42656340	4059625424216	556
AX	42656670	4059625424193	556
AX	42656820	4059625424162	556
AX	42656990	4059625424131	556
AX	42657000	4059625424117	556
AX	42657140	4059625424094	556
AX	42657340	4059625424049	556
AX	42657670	4059625424025	556
AX	42657820	4059625424896	556
AX	42657990	4059625424865	556
AX	42661000	4059625424841	554
AX	42661140	4059625424827	554
AX	42661340	4059625424773	554
AX	42661670	4059625424759	554
AX	42661820	4059625424728	554
AX	42661990	4059625424698	554
AX	42683000	4059625424674	555
AX	42683140	4059625424650	555
AX	42683340	4059625424605	555
AX	42683670	4059625424582	555
AX	42683820	4059625424551	555
AX	42683990	4059625424520	555
AX	42801000	4011097752396	568
AX	42801140	4011097821979	568
AX	42801340	4011097821955	568
AX	42801670	4059625433744	568
AX	42801800	4011097822457	568
AX	42801990	4011097822556	568
AX	42802000	4011097752389	571
AX	42802140	4011097822938	571
AX	42802340	4011097822914	571
AX	42802990	4011097823119	571

brand	Code no.	EAN	page
AX	42803000	4011097752372	567
AX	42803140	4011097824598	567
AX	42803340	4011097824574	567
AX	42803670	4059625428566	567
AX	42803990	4011097824772	567
AX	42804000	4059625367643	558
AX	42804140	4059625388662	558
AX	42804340	4059625388617	558
AX	42804670	4059625367650	558
AX	42804700	4059625367667	558
AX	42804820	4059625388594	558
AX	42804990	4059625388563	558
AX	42805000	4059625367612	558
AX	42805140	4059625387566	558
AX	42805340	4059625387511	558
AX	42805670	4059625367629	558
AX	42805700	4059625367636	558
AX	42805820	4059625387498	558
AX	42805990	4059625387467	558
AX	42810000	4059625367674	558
AX	42810140	4059625388556	558
AX	42810340	4059625388501	558
AX	42810670	4059625367681	558
AX	42810700	4059625367698	558
AX	42810820	4059625388488	558
AX	42810990	4059625388457	558
AX	42811000	4059625367285	561
AX	42811140	4059625387450	561
AX	42811340	4059625387405	561
AX	42811670	4059625367292	561
AX	42811700	4059625367308	561
AX	42811820	4059625387382	561
AX	42811990	4059625387351	561
AX	42812000	4059625367315	561
AX	42812140	4059625387344	561
AX	42812340	4059625387290	561
AX	42812670	4059625367322	561
AX	42812700	4059625367339	561
AX	42812820	4059625387276	561
AX	42812990	4059625387245	561
AX	42813000	4059625367438	559
AX	42813140	4059625387238	559
AX	42813340	4059625387184	559
AX	42813670	4059625367445	559
AX	42813700	4059625367452	559
AX	42813820	4059625387160	559
AX	42813990	4059625387139	559
AX	42818000	4059625182840	626
AX	42818330	4059625297407	626
AX	42818340	4059625297391	626
AX	42818670	4059625428559	626
AX	42818800	4059625182857	626
AX	42819000	4011097755601	566
AX	42819140	4011097820477	566
AX	42819340	4011097820453	566
AX	42819670	4059625428535	566
AX	42819990	4011097820651	566
AX	42821000	4011097752365	568
AX	42821140	4011097824857	568
AX	42821340	4011097824833	568

brand	Code no.	EAN	page
AX	42821670	4059625428528	568
AX	42821990	4011097825038	568
AX	42822000	4059625367551	560
AX	42822140	4059625388440	560
AX	42822340	4059625388396	560
AX	42822670	4059625367568	560
AX	42822700	4059625367575	560
AX	42822820	4059625388372	560
AX	42822990	4059625388341	560
AX	42823000	4059625367407	560
AX	42823140	4059625387122	560
AX	42823340	4059625387078	560
AX	42823670	4059625367414	560
AX	42823700	4059625367421	560
AX	42823820	4059625387054	560
AX	42823990	4059625387023	560
AX	42826000	4059625367469	560
AX	42826140	4059625388112	560
AX	42826340	4059625388068	560
AX	42826670	4059625367476	560
AX	42826700	4059625367483	560
AX	42826820	4059625388044	560
AX	42826990	4059625388013	560
AX	42830000	4011097752358	567
AX	42830140	4011097826141	567
AX	42830340	4011097826127	567
AX	42830670	4059625428511	567
AX	42830990	4011097826325	567
AX	42832000	4011097752341	569
AX	42832140	4011097827261	569
AX	42832340	4011097827247	569
AX	42832670	4059625428498	569
AX	42832990	4011097827544	569
AX	42833000	4011097752334	569
AX	42833140	4011097827629	569
AX	42833340	4011097827605	569
AX	42833670	4059625428474	569
AX	42833990	4011097827803	569
AX	42834000	4011097752327	566
AX	42834140	4011097827889	566
AX	42834340	4011097827865	566
AX	42834670	4059625428467	566
AX	42834990	4011097828060	566
AX	42835000	4011097752310	573
AX	42835140	4011097828145	573
AX	42835340	4011097828121	573
AX	42835670	4059625428450	573
AX	42835990	4011097828329	573
AX	42836000	4011097752303	573
AX	42836140	4011097829319	573
AX	42836340	4011097829296	573
AX	42836670	4059625428436	573
AX	42836990	4011097829494	573
AX	42837000	4059625026915	572
AX	42837140	4059625083901	572
AX	42837340	4059625083895	572
AX	42837670	4059625428412	572
AX	42837990	4059625083994	572
AX	42838000	4011097752198	570
AX	42838140	4011097829579	570

brand	Code no.	EAN	page
AX	42838340	4011097829555	570
AX	42838990	4011097829753	570
AX	42840000	4059625026694	570
AX	42840140	4059625083734	570
AX	42840340	4059625083727	570
AX	42840670	4059625428405	570
AX	42840990	4059625083826	570
AX	42841000	4011097755595	574
AX	42842000	4059625026908	570
AX	42843000	4059625367582	562
AX	42843140	4059625388334	562
AX	42843340	4059625388280	562
AX	42843670	4059625367599	562
AX	42843700	4059625367605	562
AX	42843820	4059625388266	562
AX	42843990	4059625388235	562
AX	42844000	4059625368510	562
AX	42844140	4059625388228	562
AX	42844340	4059625388174	562
AX	42844670	4059625368503	562
AX	42844700	4059625368497	562
AX	42844820	4059625388150	562
AX	42844990	4059625388129	562
AX	42846000	4059625026922	572
AX	42846140	4059625094884	572
AX	42846340	4059625094877	572
AX	42846670	4059625428382	572
AX	42846990	4059625094976	572
AX	42848000	4059625368480	565
AX	42848670	4059625368473	565
AX	42848700	4059625368466	565
AX	42849000	4059625368459	565
AX	42849140	4059625389218	565
AX	42849340	4059625389164	565
AX	42849670	4059625368442	565
AX	42849700	4059625368435	565
AX	42849820	4059625389140	565
AX	42849990	4059625389119	565
AX	42855000	4059625367704	564
AX	42855140	4059625389102	564
AX	42855340	4059625389058	564
AX	42855670	4059625367711	564
AX	42855700	4059625367728	564
AX	42855820	4059625389034	564
AX	42855990	4059625389003	564
AX	42856000	4059625367346	563
AX	42856140	4059625388990	563
AX	42856340	4059625388945	563
AX	42856670	4059625367353	563
AX	42856700	4059625367360	563
AX	42856820	4059625388921	563
AX	42856990	4059625388891	563
AX	42857000	4059625367377	563
AX	42857140	4059625388006	563
AX	42857340	4059625387955	563
AX	42857670	4059625367384	563
AX	42857700	4059625367391	563
AX	42857820	4059625387931	563
AX	42857990	4059625387900	563
AX	42858000	4059625368428	563

brand	Code no.	EAN	page
AX	42858140	4059625388884	563
AX	42858340	4059625388839	563
AX	42858670	4059625368411	563
AX	42858700	4059625368404	563
AX	42858820	4059625388815	563
AX	42858990	4059625388785	563
AX	42860000	4059625367490	561
AX	42860140	4059625387894	561
AX	42860340	4059625387849	561
AX	42860670	4059625367506	561
AX	42860700	4059625367513	561
AX	42860820	4059625387825	561
AX	42860990	4059625387795	561
AX	42870000	4011097753706	574
AX	42870140	4011097829814	574
AX	42870340	4011097829807	574
AX	42870670	4059625428375	574
AX	42870990	4011097829906	574
AX	42871000	4011097753690	574
AX	42871140	4011097944791	574
AX	42871340	4011097944784	574
AX	42871670	4059625428351	574
AX	42871990	4011097944883	574
AX	42872000	4059625367735	564
AX	42872140	4059625388778	564
AX	42872340	4059625388723	564
AX	42872670	4059625367742	564
AX	42872700	4059625367759	564
AX	42872820	4059625388709	564
AX	42872990	4059625388679	564
AX	42873000	4059625367766	559
AX	42873140	4059625387788	559
AX	42873340	4059625387733	559
AX	42873670	4059625367773	559
AX	42873700	4059625367780	559
AX	42873820	4059625387719	559
AX	42873990	4059625387689	559
AX	42880000	4059625367520	562
AX	42880140	4059625387672	562
AX	42880340	4059625387627	562
AX	42880670	4059625367537	562
AX	42880700	4059625367544	562
AX	42880820	4059625387603	562
AX	42880990	4059625387573	562
45			
AX	45001000	4011097816760	340
AX	45001340	4059625033548	340
AX	45001820	4011097982663	340
AX	45002000	4011097816753	340
AX	45002340	4059625013670	340
AX	45002820	4011097982687	340
AX	45003000	4011097816746	340
AX	45003340	4059625013809	340
AX	45003820	4011097982700	340
AX	45004000	4011097816739	341
AX	45004340	4059625033678	341
AX	45004820	4011097982724	341
AX	45005000	4011097816722	340
AX	45005340	4059625013939	340
AX	45005820	4011097982649	340

brand	Code no.	EAN	page
AX	45016000	4011097982618	341
AX	45016340	4059625075937	341
AX	45016820	4011097982625	341
AX	45037000	4011097849485	346
AX	45037340	4059625015247	346
AX	45037820	4011097982939	346
AX	45110000	4011097832432	590
AX	45110340	4059625082355	590
AX	45110820	4059625082393	590
AX	45111000	4011097832425	590
AX	45111340	4059625082508	590
AX	45111820	4059625082546	590
AX	45112000	4011097982854	343
AX	45112340	4059625015377	343
AX	45112820	4011097982861	343
AX	45113000	4011097982885	343
AX	45113340	4059625015506	343
AX	45113820	4011097982892	343
AX	45130000	4011097982748	342
AX	45130340	4059625014844	342
AX	45130820	4011097982755	342
AX	45133000	4011097849478	345
AX	45133340	4059625014974	345
AX	45133820	4011097982793	345
AX	45200000	4011097815961	346
AX	45200340	4059625016237	346
AX	45200820	4011097982977	346
AX	45405000	4011097849461	348
AX	45405340	4059625018897	348
AX	45405820	4011097983387	348
AX	45407000	4011097849454	348
AX	45407340	4059625019023	348
AX	45407820	4011097983400	348
AX	45410000	4011097849430	351
AX	45410340	4059625019801	351
AX	45410820	4011097989570	351
AX	45412000	4011097849423	350
AX	45412340	4059625019931	350
AX	45412820	4011097989532	350
AX	45416000	4011097849416	347
AX	45416340	4059625032626	347
AX	45416820	4011097983288	347
AX	45444000	4011097849393	349
AX	45444340	4059625020067	349
AX	45444820	4011097983240	349
AX	45600000	4011097849386	351
AX	45600340	4059625016497	351
AX	45600820	4011097983035	351
AX	45605000	4011097849379	352
AX	45605340	4059625019153	352
AX	45605820	4011097983202	352
AX	45710180	4011097789309	676
AX	45711000	4011097788999	123
AX	45711140	4011097825090	123
AX	45711340	4011097825083	123
AX	45711670	4059625331767	123
AX	45711700	4059625469200	123
AX	45711950	4011097825076	123
AX	45711990	4011097825199	123
AX	45712000	4011097788982	123

brand	Code no.	EAN	page
AX	45712140	4011097824307	123
AX	45712340	4011097824291	123
AX	45712670	4059625331743	123
AX	45712700	4059625469170	123
AX	45712950	4011097824284	123
AX	45712990	4011097824406	123
AX	45713000	4011097788975	123
AX	45713140	4011097824154	123
AX	45713340	4011097824147	123
AX	45713670	4059625331712	123
AX	45713700	4059625469132	123
AX	45713950	4011097824130	123
AX	45713990	4011097824253	123
AX	45720000	4011097790022	137
AX	45720140	4059625087961	137
AX	45720340	4059625087954	137
AX	45720670	4059625331682	137
AX	45720700	4059625469095	137
AX	45720950	4059625087947	137
AX	45720990	4059625088067	137
AX	45721000	4011097788968	475
AX	45721140	4011097822693	475
AX	45721340	4011097822686	475
AX	45721820	4011097803326	475
AX	45721990	4011097822785	475
AX	45722000	4011097790039	467
AX	45722140	4059625088999	467
AX	45722340	4059625088982	467
AX	45722950	4059625088975	467
AX	45722990	4059625089194	467
AX	45723000	4011097789910	139
AX	45723140	4011097822341	139
AX	45723340	4011097822334	139
AX	45723670	4059625331675	139
AX	45723700	4059625469088	139
AX	45723950	4011097822327	139
AX	45723990	4011097822648	139
AX	45770180	4011097789903	678
AX	45771000	4011097789798	124
AX	45771140	4011097823348	124
AX	45771340	4011097823331	124
AX	45771670	4059625331644	124
AX	45771700	4059625469057	124
AX	45771950	4011097823324	124
AX	45771990	4011097823447	124
AX	45790000	4011097807980	676
46			
AX	46011000	4059625149041	154
AX	46021000	4059625149362	154
AX	46031000	4059625149348	154
AX	46041000	4059625149324	156
AX	46051000	4059625149300	155
AX	46061000	4059625149287	155
AX	46211000	4059625190210	157
AX	46411000	4059625190074	160
AX	46431000	4059625149225	157
AX	46441000	4059625149201	159
AX	46470000	4059625203958	158
AX	46521000	4059625149164	160
AX	46701000	4059625149140	161

brand	Code no.	EAN	page
AX	46711000	4059625149126	161
AX	46721000	4059625189948	161
AX	46731000	4059625149096	161
AX	46741000	4059625189924	162
AX	46751000	4059625149072	162
AX	46761000	4059625149058	163
AX	46771000	4059625189900	163
47			
AX	47010000	4059625161401	178
AX	47010600	4059625161555	178
AX	47010670	4059625450727	178
AX	47012000	4059625186190	178
AX	47012140	4059625201862	178
AX	47012340	4059625201855	178
AX	47012670	4059625450703	178
AX	47020000	4059625161388	179
AX	47020600	4059625161531	179
AX	47020670	4059625450925	179
AX	47022000	4059625186121	179
AX	47022140	4059625202609	179
AX	47022340	4059625202197	179
AX	47022670	4059625450901	179
AX	47030000	4059625450666	178
AX	47030600	4059625450642	178
AX	47030670	4059625450628	178
AX	47032000	4059625450611	178
AX	47032140	4059625503515	178
AX	47032340	4059625503508	178
AX	47032670	4059625450864	178
AX	47040000	4059625161364	182
AX	47040600	4059625161517	182
AX	47040670	4059625451120	182
AX	47042000	4059625186114	182
AX	47042140	4059625256244	182
AX	47042340	4059625256237	182
AX	47042670	4059625451113	182
AX	47050000	4059625161340	180
AX	47050600	4059625161494	180
AX	47050670	4059625450840	180
AX	47052000	4059625186138	180
AX	47052140	4059625203989	180
AX	47052340	4059625203972	180
AX	47052670	4059625450826	180
AX	47060000	4059625161326	179
AX	47060600	4059625161470	179
AX	47060670	4059625450789	179
AX	47062000	4059625186145	179
AX	47062140	4059625202050	179
AX	47062340	4059625202043	179
AX	47062670	4059625450765	179
AX	47070000	4059625450598	180
AX	47070600	4059625450574	180
AX	47070670	4059625451106	180
AX	47072000	4059625450550	180
AX	47072140	4059625502297	180
AX	47072340	4059625502280	180
AX	47072670	4059625451090	180
AX	47080000	4059625450536	181
AX	47080600	4059625450512	181
AX	47080670	4059625451076	181

brand	Code no.	EAN	page
AX	47082000	4059625450499	181
AX	47082140	4059625502273	181
AX	47082340	4059625502266	181
AX	47082670	4059625451069	181
AX	47210000	4059625161302	183
AX	47210600	4059625161456	183
AX	47210670	4059625451045	183
AX	47212000	4059625186152	183
AX	47212140	4059625201664	183
AX	47212340	4059625201657	183
AX	47212670	4059625451038	183
AX	47410000	4059625161296	185
AX	47410600	4059625161449	185
AX	47410670	4059625451021	185
AX	47412000	4059625186169	185
AX	47412140	4059625208878	185
AX	47412340	4059625208861	185
AX	47412670	4059625451007	185
AX	47430000	4059625161289	184
AX	47430600	4059625161432	184
AX	47430670	4059625450994	184
AX	47432000	4059625186176	184
AX	47432140	4059625212509	184
AX	47432340	4059625212196	184
AX	47432670	4059625450987	184
AX	47900000	4059625189023	186
AX	47900600	4059625189030	186
AX	47901000	4059625189047	186
AX	47901600	4059625189054	186
AX	47902000	4059625189061	186
AX	47902600	4059625189221	186
AX	47903000	4059625189214	185
AX	47903140	4059625212936	185
AX	47903340	4059625212929	185
AX	47903670	4059625451175	185
AX	47904000	4059625189207	185
AX	47904140	4059625213087	185
AX	47904340	4059625213070	185
AX	47904670	4059625451151	185
AX	47905000	4059625189191	185
AX	47905140	4059625217139	185
AX	47905340	4059625217122	185
AX	47905670	4059625451137	185
AX	47906000	4059625189184	186
AX	47907000	4059625189177	186
AX	47908000	4059625189160	186
AX	47909000	4059625189153	187
AX	47910000	4059625189146	187
AX	47911000	4059625189139	187
AX	47913000	4059625189122	187
AX	47914000	4059625189115	187
AX	47915000	4059625189108	187
AX	47916000	4059625189092	188
AX	47917000	4059625189085	188
AX	47918000	4059625189078	188
AX	47921000	4059625306529	188
AX	47922000	4059625306536	188
AX	47923000	4059625306512	188
AX	47924000	4059625306543	189
AX	47925000	4059625306550	189

brand	Code no.	EAN	page
AX	47926000	4059625306567	190
48			
AX	48000000	4059625329733	117
AX	48000140	4059625371763	117
AX	48000340	4059625369234	117
AX	48000670	4059625366318	117
AX	48000700	4059625470077	117
AX	48000950	4059625371756	117
AX	48000990	4059625369272	117
AX	48001000	4059625329719	117
AX	48001140	4059625371855	117
AX	48001340	4059625369357	117
AX	48001670	4059625329696	117
AX	48001700	4059625470053	117
AX	48001800	4059625371886	117
AX	48001950	4059625371848	117
AX	48001990	4059625369395	117
AX	48002000	4059625329672	117
AX	48002140	4059625371947	117
AX	48002340	4059625369418	117
AX	48002670	4059625329641	117
AX	48002700	4059625470022	117
AX	48002950	4059625371930	117
AX	48002990	4059625369456	117
AX	48010000	4059625331583	110
AX	48010140	4059625370506	110
AX	48010340	4059625370490	110
AX	48010670	4059625331569	110
AX	48010700	4059625469965	110
AX	48010950	4059625370483	110
AX	48010990	4059625370605	110
AX	48020000	4059625331545	110
AX	48020140	4059625370643	110
AX	48020340	4059625369111	110
AX	48020670	4059625331507	110
AX	48020700	4059625469941	110
AX	48020950	4059625370636	110
AX	48020990	4059625369159	110
AX	48030000	4059625331354	110
AX	48030140	4059625370735	110
AX	48030340	4059625369173	110
AX	48030670	4059625331316	110
AX	48030700	4059625469897	110
AX	48030950	4059625370728	110
AX	48030990	4059625369210	110
AX	48040000	4059625717172	114
AX	48040140	4059625752401	114
AX	48040340	4059625752395	114
AX	48040670	4059625752388	114
AX	48040950	4059625752371	114
AX	48040990	4059625752364	114
AX	48050000	4059625331262	113
AX	48050140	4059625370988	113
AX	48050340	4059625370971	113
AX	48050670	4059625331231	113
AX	48050700	4059625469842	113
AX	48050950	4059625370964	113
AX	48050990	4059625371183	113
AX	48060000	4059625331187	111
AX	48060140	4059625370834	111

brand	Code no.	EAN	page
AX	48060340	4059625370827	111
AX	48060670	4059625331149	111
AX	48060700	4059625469781	111
AX	48060950	4059625370810	111
AX	48060990	4059625370933	111
AX	48070000	4059625331095	112
AX	48070140	4059625371237	112
AX	48070340	4059625371220	112
AX	48070670	4059625331064	112
AX	48070700	4059625469743	112
AX	48070950	4059625371213	112
AX	48070990	4059625371336	112
AX	48112000	4059625331026	116
AX	48112140	4059625371374	116
AX	48112340	4059625369296	116
AX	48112670	4059625330999	116
AX	48112700	4059625469705	116
AX	48112950	4059625371367	116
AX	48112990	4059625369333	116
AX	48120000	4059625329511	118
AX	48120140	4059625372036	118
AX	48120340	4059625369487	118
AX	48120670	4059625329498	118
AX	48120700	4059625469651	118
AX	48120950	4059625372029	118
AX	48120990	4059625369524	118
AX	48130000	4059625717165	115
AX	48130140	4059625752357	115
AX	48130340	4059625752340	115
AX	48130950	4059625752333	115
AX	48130990	4059625752326	115
AX	48140000	4059625717158	115
AX	48140140	4059625752319	115
AX	48140340	4059625752302	115
AX	48140670	4059625750391	115
AX	48140950	4059625750384	115
AX	48140990	4059625750377	115
AX	48150000	4059625717141	114
AX	48150140	4059625750360	114
AX	48150340	4059625750353	114
AX	48150950	4059625750346	114
AX	48150990	4059625750339	114
AX	48160000	4059625717134	114
AX	48160140	4059625750322	114
AX	48160340	4059625750315	114
AX	48160670	4059625752609	114
AX	48160950	4059625752593	114
AX	48160990	4059625752586	114
AX	48170000	4059625717127	118
AX	48170140	4059625752579	118
AX	48170340	4059625752562	118
AX	48170950	4059625752555	118
AX	48170990	4059625752548	118
AX	48180000	4059625717110	116
AX	48180140	4059625752531	116
AX	48180340	4059625752524	116
AX	48180950	4059625752517	116
AX	48180990	4059625752500	116
AX	48210000	4059625330944	118
AX	48210140	4059625372135	118

Code Numbers (HG = hansgrohe, AX = AXOR)

brand	Code no.	EAN	page
AX	48210340	4059625372128	118
AX	48210670	4059625330920	118
AX	48210700	4059625469620	118
AX	48210950	4059625372111	118
AX	48210990	4059625372234	118
AX	48415000	4059625717103	129
AX	48415140	4059625752494	129
AX	48415340	4059625752487	129
AX	48415670	4059625752470	129
AX	48415950	4059625752463	129
AX	48415990	4059625752456	129
AX	48430000	4059625717097	121
AX	48430140	4059625752449	121
AX	48430340	4059625752432	121
AX	48430670	4059625752425	121
AX	48430950	4059625752418	121
AX	48430990	4059625752807	121
AX	48431000	4059625717080	121
AX	48431140	4059625752791	121
AX	48431340	4059625752784	121
AX	48431670	4059625752777	121
AX	48431950	4059625752760	121
AX	48431990	4059625752753	121
AX	48440000	4059625330913	119
AX	48440140	4059625372272	119
AX	48440340	4059625369548	119
AX	48440670	4059625330883	119
AX	48440700	4059625469613	119
AX	48440950	4059625372265	119
AX	48440990	4059625369586	119
AX	48443000	4059625717073	120
AX	48443140	4059625752746	120
AX	48443340	4059625752739	120
AX	48443950	4059625752722	120
AX	48443990	4059625752715	120
AX	48444000	4059625717066	120
AX	48444140	4059625752708	120
AX	48444340	4059625752692	120
AX	48444950	4059625752685	120
AX	48444990	4059625752678	120
AX	48470000	4059625717059	122
AX	48470140	4059625752661	122
AX	48470340	4059625752654	122
AX	48470950	4059625752647	122
AX	48470990	4059625752630	122
AX	48490000	4059625330722	135
AX	48490140	4059625364055	135
AX	48490340	4059625364048	135
AX	48490670	4059625330708	135
AX	48490700	4059625469491	135
AX	48490950	4059625364031	135
AX	48490990	4059625364154	135
AX	48491000	4059625330685	135
AX	48491140	4059625364208	135
AX	48491340	4059625364192	135
AX	48491670	4059625330678	135
AX	48491700	4059625469484	135
AX	48491950	4059625364185	135
AX	48491990	4059625364307	135
AX	48492000	4059625330661	135

brand	Code no.	EAN	page
AX	48492140	4059625364451	135
AX	48492340	4059625368879	135
AX	48492670	4059625330647	135
AX	48492700	4059625469460	135
AX	48492950	4059625364444	135
AX	48492990	4059625368916	135
AX	48493000	4059625330623	136
AX	48493140	4059625369630	136
AX	48493340	4059625369623	136
AX	48493670	4059625330616	136
AX	48493700	4059625469446	136
AX	48493950	4059625369616	136
AX	48493990	4059625369739	136
AX	48494000	4059625322680	136
AX	48494140	4059625369777	136
AX	48494340	4059625368930	136
AX	48494670	4059625330593	136
AX	48494700	4059625469422	136
AX	48494950	4059625369760	136
AX	48494990	4059625368978	136
AX	48495000	4059625330579	447
AX	48495140	4059625369876	447
AX	48495340	4059625369869	447
AX	48495670	4059625330562	447
AX	48495700	4059625469415	447
AX	48495950	4059625369852	447
AX	48495990	4059625369975	447
AX	48496000	4059625330555	447
AX	48496140	4059625370025	447
AX	48496340	4059625370018	447
AX	48496670	4059625330531	447
AX	48496700	4059625469392	447
AX	48496950	4059625370001	447
AX	48496990	4059625370124	447
AX	48615000	4059625717042	129
AX	48615140	4059625752623	129
AX	48615340	4059625752616	129
AX	48615670	4059625753002	129
AX	48615950	4059625752999	129
AX	48615990	4059625752982	129
AX	48651000	4059625330456	137
AX	48651140	4059625364352	137
AX	48651340	4059625368817	137
AX	48651670	4059625330432	137
AX	48651700	4059625469354	137
AX	48651950	4059625364345	137
AX	48651990	4059625368855	137
AX	48655000	4059625717035	138
AX	48655140	4059625752975	138
AX	48655340	4059625752968	138
AX	48655950	4059625752951	138
AX	48655990	4059625752944	138
AX	48656000	4059625717028	138
AX	48656140	4059625752937	138
AX	48656340	4059625752920	138
AX	48656950	4059625752913	138
AX	48656990	4059625752906	138
AX	48710180	4059625717011	129
AX	48711000	4059625717004	127
AX	48711140	4059625752890	127

brand	Code no.	EAN	page
AX	48711340	4059625752845	127
AX	48711670	4059625752838	127
AX	48711950	4059625753200	127
AX	48711990	4059625753194	127
AX	48712000	4059625708699	125
AX	48712140	4059625753187	125
AX	48712340	4059625753170	125
AX	48712670	4059625753163	125
AX	48712950	4059625753156	125
AX	48712990	4059625753149	125
AX	48713000	4059625717295	126
AX	48713140	4059625753132	126
AX	48713340	4059625753125	126
AX	48713670	4059625753118	126
AX	48713950	4059625753682	126
AX	48713990	4059625753101	126
AX	48720180	4059625717288	129
AX	48722000	4059625717271	125
AX	48722140	4059625753095	125
AX	48722340	4059625753088	125
AX	48722670	4059625753071	125
AX	48722950	4059625753064	125
AX	48722990	4059625753057	125
AX	48723000	4059625717264	126
AX	48723140	4059625753040	126
AX	48723340	4059625753033	126
AX	48723670	4059625753026	126
AX	48723950	4059625753019	126
AX	48723990	4059625753408	126
AX	48771000	4059625717257	128
AX	48771140	4059625753392	128
AX	48771340	4059625753347	128
AX	48771670	4059625753330	128
AX	48771950	4059625753309	128
AX	48771990	4059625753293	128
AX	48772000	4059625717240	128
AX	48772140	4059625753286	128
AX	48772340	4059625753231	128
AX	48772670	4059625753224	128
AX	48772950	4059625753590	128
AX	48772990	4059625753583	128
AX	48780000	4059625717233	139
AX	48780140	4059625753576	139
AX	48780340	4059625753569	139
AX	48780670	4059625753552	139
AX	48780950	4059625753545	139
AX	48780990	4059625753538	139
AX	48781000	4059625717226	139
AX	48781140	4059625753521	139
AX	48781340	4059625753514	139
AX	48781950	4059625753507	139
AX	48781990	4059625753491	139
AX	48790000	4059625330371	132
AX	48790140	4059625370162	132
AX	48790340	4059625368992	132
AX	48790670	4059625330357	132
AX	48790700	4059625469309	132
AX	48790950	4059625370155	132
AX	48790990	4059625369036	132
AX	48791000	4059625330333	133

brand	Code no.	EAN	page
AX	48791140	4059625370254	133
AX	48791340	4059625369050	133
AX	48791670	4059625330326	133
AX	48791700	4059625469286	133
AX	48791950	4059625370247	133
AX	48791990	4059625369098	133
AX	48792000	4059625330319	134
AX	48792140	4059625370353	134
AX	48792340	4059625370346	134
AX	48792670	4059625328897	134
AX	48792700	4059625469262	134
AX	48792950	4059625370339	134
AX	48792990	4059625370452	134
AX	48794000	4059625717219	131
AX	48794140	4059625718810	131
AX	48794340	4059625718803	131
AX	48794670	4059625718797	131
AX	48794950	4059625718773	131
AX	48794990	4059625718766	131
AX	48795000	4059625717202	131
AX	48795140	4059625753484	131
AX	48795340	4059625753477	131
AX	48795670	4059625753460	131
AX	48795950	4059625753453	131
AX	48795990	4059625753446	131
AX	48796000	4059625717196	130
AX	48796140	4059625753439	130
AX	48796340	4059625753422	130
AX	48796670	4059625753415	130
AX	48796950	4059625753675	130
AX	48796990	4059625753668	130
AX	48797000	4059625717189	130
AX	48797140	4059625753651	130
AX	48797340	4059625753644	130
AX	48797670	4059625753637	130
AX	48797950	4059625753620	130
AX	48797990	4059625753613	130
AX	48798180	4059625329368	133
49			
AX	49010000	4059625558409	72
AX	49010140	4059625558393	72
AX	49010340	4059625558386	72
AX	49010670	4059625558379	72
AX	49010820	4059625558362	72
AX	49010990	4059625558355	72
AX	49011000	4059625558348	72
AX	49011140	4059625558331	72
AX	49011340	4059625558324	72
AX	49011670	4059625558317	72
AX	49011820	4059625558300	72
AX	49011990	4059625558294	72
AX	49020000	4059625558287	72
AX	49020140	4059625558270	72
AX	49020340	4059625558263	72
AX	49020670	4059625558256	72
AX	49020820	4059625558249	72
AX	49020990	4059625558232	72
AX	49021000	4059625558225	72
AX	49021140	4059625558607	72
AX	49021340	4059625558591	72

Code Numbers (HG = hansgrohe, AX = AXOR)

brand	Code no.	EAN	page
AX	49021670	4059625558218	72
AX	49021820	4059625558584	72
AX	49021990	4059625558577	72
AX	49030000	4059625558560	73
AX	49030140	4059625558553	73
AX	49030340	4059625558546	73
AX	49030670	4059625558539	73
AX	49030820	4059625558522	73
AX	49030990	4059625558515	73
AX	49031000	4059625558508	73
AX	49031140	4059625558492	73
AX	49031340	4059625558485	73
AX	49031670	4059625558478	73
AX	49031820	4059625558461	73
AX	49031990	4059625558454	73
AX	49040000	4059625558447	73
AX	49040140	4059625558805	73
AX	49040340	4059625558799	73
AX	49040670	4059625558430	73
AX	49040820	4059625558423	73
AX	49040990	4059625558416	73
AX	49041000	4059625558782	73
AX	49041140	4059625558775	73
AX	49041340	4059625558768	73
AX	49041670	4059625558751	73
AX	49041820	4059625558744	73
AX	49041990	4059625558737	73
AX	49050000	4059625558720	73
AX	49050140	4059625558713	73
AX	49050340	4059625558706	73
AX	49050670	4059625558690	73
AX	49050820	4059625558683	73
AX	49050990	4059625558676	73
AX	49051000	4059625558669	73
AX	49051140	4059625558652	73
AX	49051340	4059625558645	73
AX	49051670	4059625558638	73
AX	49051820	4059625558621	73
AX	49051990	4059625558614	73
AX	49060000	4059625559000	75
AX	49060140	4059625558997	75
AX	49060340	4059625558980	75
AX	49060670	4059625558973	75
AX	49060820	4059625558966	75
AX	49060990	4059625558959	75
AX	49061000	4059625558942	75
AX	49061140	4059625558935	75
AX	49061340	4059625558928	75
AX	49061670	4059625558911	75
AX	49061820	4059625558904	75
AX	49061990	4059625558898	75
AX	49070000	4059625558881	76
AX	49070140	4059625558874	76
AX	49070340	4059625558867	76
AX	49070670	4059625558850	76
AX	49070820	4059625558843	76
AX	49070990	4059625558836	76
AX	49071000	4059625558829	76
AX	49071140	4059625559208	76
AX	49071340	4059625559192	76

brand	Code no.	EAN	page
AX	49071670	4059625558812	76
AX	49071820	4059625559185	76
AX	49071990	4059625559178	76
AX	49110000	4059625559161	74
AX	49110140	4059625559154	74
AX	49110340	4059625559147	74
AX	49110670	4059625559130	74
AX	49110820	4059625559123	74
AX	49110990	4059625559116	74
AX	49111000	4059625559109	74
AX	49111140	4059625559093	74
AX	49111340	4059625559086	74
AX	49111670	4059625559079	74
AX	49111820	4059625559062	74
AX	49111990	4059625559055	74
AX	49210000	4059625559048	77
AX	49210140	4059625559406	77
AX	49210340	4059625559390	77
AX	49210670	4059625559031	77
AX	49210820	4059625559024	77
AX	49210990	4059625559017	77
AX	49211000	4059625559383	77
AX	49211140	4059625559376	77
AX	49211340	4059625559369	77
AX	49211670	4059625559352	77
AX	49211820	4059625559345	77
AX	49211990	4059625559338	77
AX	49410000	4059625559598	84
AX	49410140	4059625559581	84
AX	49410340	4059625559574	84
AX	49410670	4059625559567	84
AX	49410820	4059625559550	84
AX	49410990	4059625559543	84
AX	49430000	4059625559536	82
AX	49430140	4059625559529	82
AX	49430340	4059625559512	82
AX	49430670	4059625559505	82
AX	49430820	4059625559499	82
AX	49430990	4059625559482	82
AX	49431000	4059625559475	82
AX	49431140	4059625559468	82
AX	49431340	4059625559451	82
AX	49431670	4059625559444	82
AX	49431820	4059625559437	82
AX	49431990	4059625559420	82
AX	49440000	4059625559321	78
AX	49440140	4059625559314	78
AX	49440340	4059625559307	78
AX	49440670	4059625559291	78
AX	49440820	4059625559284	78
AX	49440990	4059625559277	78
AX	49441000	4059625559260	78
AX	49441140	4059625559253	78
AX	49441340	4059625559246	78
AX	49441670	4059625559239	78
AX	49441820	4059625559222	78
AX	49441990	4059625559215	78
AX	49449000	4059625559413	83
AX	49451000	4059625620984	93
AX	49451140	4059625620991	93

brand	Code no.	EAN	page
AX	49451340	4059625621004	93
AX	49451670	4059625621011	93
AX	49451820	4059625621028	93
AX	49451990	4059625621035	93
AX	49480000	4059625559741	79
AX	49480140	4059625559734	79
AX	49480340	4059625559727	79
AX	49480670	4059625559710	79
AX	49480820	4059625559703	79
AX	49480990	4059625559697	79
AX	49481000	4059625559680	79
AX	49481140	4059625559673	79
AX	49481340	4059625559666	79
AX	49481670	4059625559659	79
AX	49481820	4059625559642	79
AX	49481990	4059625559635	79
AX	49482000	4059625559628	80
AX	49482140	4059625559949	80
AX	49482340	4059625559932	80
AX	49482670	4059625559611	80
AX	49482820	4059625559925	80
AX	49482990	4059625559604	80
AX	49483000	4059625559918	80
AX	49483140	4059625559901	80
AX	49483340	4059625559895	80
AX	49483670	4059625559888	80
AX	49483820	4059625559871	80
AX	49483990	4059625559864	80
AX	49626000	4059625560082	98
AX	49626140	4059625560099	98
AX	49626340	4059625560105	98
AX	49626670	4059625560112	98
AX	49626820	4059625560129	98
AX	49626990	4059625560136	98
AX	49651000	4059625621042	93
AX	49651140	4059625621059	93
AX	49651340	4059625621066	93
AX	49651670	4059625621073	93
AX	49651820	4059625621080	93
AX	49651990	4059625621097	93
AX	49700000	4059625559857	85
AX	49700140	4059625559840	85
AX	49700340	4059625559833	85
AX	49700670	4059625559826	85
AX	49700820	4059625559819	85
AX	49700990	4059625559802	85
AX	49701000	4059625559796	86
AX	49701140	4059625560075	86
AX	49701340	4059625559789	86
AX	49701670	4059625559772	86
AX	49701820	4059625559765	86
AX	49701990	4059625559758	86
AX	49710000	4059625560068	86
AX	49710140	4059625560051	86
AX	49710340	4059625560044	86
AX	49710670	4059625560037	86
AX	49710820	4059625560020	86
AX	49710990	4059625560013	86
AX	49711000	4059625560006	87
AX	49711140	4059625559994	87
AX	49711340	4059625559987	87
AX	49711670	4059625559970	87
AX	49711820	4059625559963	87
AX	49711990	4059625559956	87
51			
AX	51300000	4059625077788	641
AX	51300140	4059625172971	641
AX	51300340	4059625173039	641
AX	51300670	4059625493267	641
AX	51300700	4059625493243	641
AX	51300820	4059625130049	641
AX	51300990	4059625173077	641
AX	51301000	4059625032244	641
AX	51301140	4059625171356	641
AX	51301250	4059625171370	641
AX	51301300	4059625171752	641
AX	51301310	4059625171387	641
AX	51301330	4059625171707	641
AX	51301340	4059625171349	641
AX	51301670	4059625493229	641
AX	51301700	4059625493205	641
AX	51301800	4059625171394	641
AX	51301820	4059625173480	641
AX	51301950	4059625171332	641
AX	51301990	4059625171738	641
AX	51302000	4059625032237	640
AX	51303000	4059625077795	642
AX	51303820	4059625147863	642
AX	51304000	4059625077801	642
AX	51304820	4059625147887	642
AX	51305000	4059625077818	642
AX	51305140	4059625171912	642
AX	51305340	4059625171905	642
AX	51305670	4059625339817	642
AX	51305700	4059625454459	642
AX	51305820	4059625147900	642
AX	51305990	4059625171998	642
AX	51306000	4059625077689	643
AX	51306140	4059625204818	643
AX	51306340	4059625330135	643
AX	51306670	4059625339824	643
AX	51306700	4059625454442	643
AX	51306820	4059625204849	643
AX	51306990	4059625204900	643
AX	51307000	4059625079263	643
AX	51307140	4059625204955	643
AX	51307340	4059625330159	643
AX	51307820	4059625147924	643
AX	51307990	4059625205020	643
AX	51308000	4059625077696	643
AX	51309000	4059625077719	644
AX	51310000	4059625077726	644
AX	51312000	4059625077702	644
58			
AX	58308000	4059625032299	637
93			
AX	93171000	4059625032374	663
AX	93307000	4059625163368	528
AX	93308000	4059625163375	528
AX	93310000	4059625163399	528

Code Numbers (HG = hansgrohe, AX = AXOR)

brand	Code no.	EAN	page
AX	93311000	4059625164303	528
AX	93312000	4059625164310	528
HG	93500000	4059625222478	657
AX	93663000	4059625261323	528
96			
AX	96259000	4011097422640	669
AX	96383000	4011097350707	669
AX	96441000	4011097432717	670
98			
AX	98860000	4011097571065	657

Since 1993, AXOR has led the way in transforming the bathroom into a place of personal luxury, giving you stylistic freedom, luxurious water experiences and excellence in every detail. Collaborating with world-leading designers, renowned for bold visions and distinctive styles, AXOR offers a product portfolio unrivaled in its variety. Every faucet, shower, basin, tub and accessory has a character of its own, enabling you to bring your personal taste and style to every corner of the bathroom.

Uncompromising when it comes to quality and innovation, AXOR engineers and manufactures more than 90 percent of its products in Germany's Black Forest, ensuring designs that are exceptionally long-lasting thanks not just to their refined aesthetics but to their manufacturing excellence and technological superiority. All products are available in the exclusive AXOR FinishPlus range of surfaces allowing even greater stylistic freedom. And for the ultimate in free expression, AXOR Signature can transform almost any AXOR piece into a one-of-a-kind creation.

Antonio Citterio

Barber Osgerby

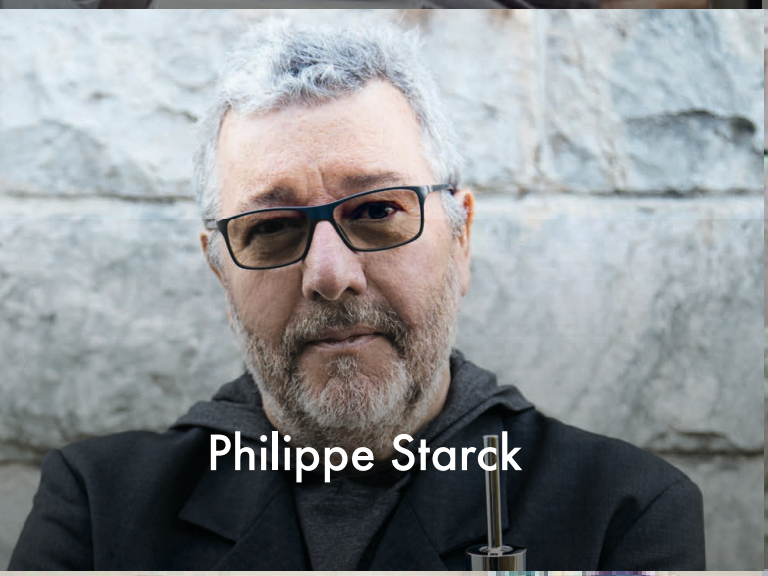
Philippe Starck

Jean-Marie Massaud

Patricia Urquiola

PHOENIX

Nendo

Front

When AXOR first debuted the AXOR Starck collection by Philippe Starck with the 1994 Salon d'Eau, it introduced a simple yet groundbreaking concept to the world of bathroom design: work in close collaboration with the world's leading minds to create cohesive collections that are unique, personal expressions of style.

In the three decades that have passed since then, the AXOR Starck collection has become an enduring icon in bathroom design, inspiring countless users and architects alike with its timeless, masterful minimalism. And AXOR, asserting itself as a pioneer of personal luxury in the bathroom, has continued to stay true to this unique model of success, striking up exclusive collaborations with a careful selection of world-renowned designers.

From the signature Italian elegance of Antonio Citterio to the unorthodox geometries of Patricia Urquiola, each designer brings their own unique style and personality to the table. Conveyed with the German manufacturing excellence of AXOR, these designer's ideas become distinct collections that push the boundaries of bathroom design. As diverse as the personalities behind them, these collections offer a vast stylistic variety that sets AXOR apart and enables customers to express individuality—and pursue their own, personal ideas of luxury.

Five reasons for AXOR

1. Design diversity

AXOR collaborates with internationally renowned designers. Innovative and timeless at once, their design approaches set standards again and again. With their highly distinct signatures, they shape the great stylistic diversity and product depth of the AXOR range, providing new inspiration for the development of the space, its use, and users to express their personality.

2. Individualization

The exclusive AXOR FinishPlus and AXOR Signature customization services meet customers' increasing demand for more options to customize bathroom products. With colored PVD surfaces and customized, bespoke solutions, AXOR products become unmistakably unique.

3. Outstanding quality, made in Germany

Ninety percent of our portfolio is assembled at the AXOR Centre for Excellence in Germany's Black Forest. Here, AXOR products are created with a focus on excellent quality and craftsmanship throughout their production. As part of our promise of long-lasting quality, AXOR offers an extended five-year warranty and a spare part availability on all products.

4. Sustainability*

Developed exclusively in Europe in accordance with science-based targets, our products are designed to be timeless and built to last. AXOR adheres to eco-design principles* and, with a goal of converting all products to water-saving* technologies by 2030, seeks to promote sensible consumption of our most precious resource: water.

5. Worldwide presence

As part of the Hansgrohe Group, AXOR has 33 subsidiaries and 21 sales offices worldwide and supplies its products to over 146 countries. AXOR faucets, showers, and kitchen faucets can be found in the world's finest homes, hotels, and restaurants. International architects, planners, and builders trust AXOR quality in products and expert advice.

*axor-design.com/r/sustainability

Our service offering

AXOR FINISHPLUS AND AXOR SIGNATURE

With these customization services, AXOR answers customers' personal wishes and the demand for distinctive design. More at: axor-design.com

FIVE-YEAR MANUFACTURER'S GUARANTEE

The manufacturer's warranty extends beyond the legally required period and underlines AXOR's quality claim. In addition, strict quality management is already applied during the manufacturing process to ensure products meet the high requirements of independent testing institutes and legal regulations. Please note the warranty conditions at:
axor-design.com/en/service/product-warranty

15 YEARS GUARANTEED AVAILABILITY

Fifteen years guaranteed availability for spare parts for AXOR products ensures a secure investment. All information and products are fast and easy to find online in the Spare Parts Shop:
spares.hansgrohe.com

PROFESSIONAL WEBSITE

On the portal, specialist retailers, architects, and installers can find information, planning data, and prices for all products, as well as practical tips and tools for professional bathroom planning and advice. More at: pro.hansgrohe.com

PLANNING DATA

Installation and service instructions, dimensional drawings, BIM planning data and 3D data for optimal bathroom planning with AXOR products can also be found in the professional portal:
pro.hansgrohe.com

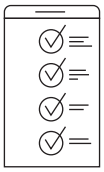

COMFORTZONE TEST

Create the perfect combinations of faucets and sinks in this internal test center. For this purpose, matching sinks from leading manufacturers are tested with AXOR products for optimal functionality and appearance. All recommended combinations can be found on the AXOR website on the respective collection page: axor-design.com

MEISTERSERVICE

AXOR service specialists are trained sanitation experts with advice on technical issues – by phone, email, or chat. In special cases, a specialist for building services can also be available on site. If required, local contacts are available by phone or e-mail: service@axor-design.com

PROJECT CONSULTATION

AXOR offers professional support and advice for project tenders and planning worldwide. If required, please contact your local contact partner or send an email to: service@axor-design.com

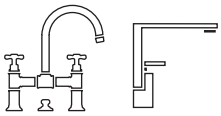

BATHROOM EXHIBITION

Experience AXOR live worldwide: The WaterStudios in architectural and design metropolises are sources of inspiration and meeting places, design and training centers for trade partners, architects, and interior designers. In the Aquademie at the brand's headquarters in Schiltach, Germany, visitors and trade partners can experience a bathroom and kitchen world over 1,000 square meters with a museum on the history of the bathroom, the company, and the brand, regular events, and a Showerworld for test showers.

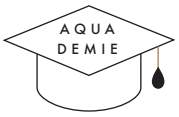

ONLINE AQUADEMIE

You can access the newly developed Hansgrohe Online Aquademie via the trade partner website. Here, partners in the trade and crafts can benefit from detailed knowledge on the topics of products and sanitation technology, as well as from non-technical highlights. More information at: aquademie-seminars.hansgrohe.com

Design icons and style diversity

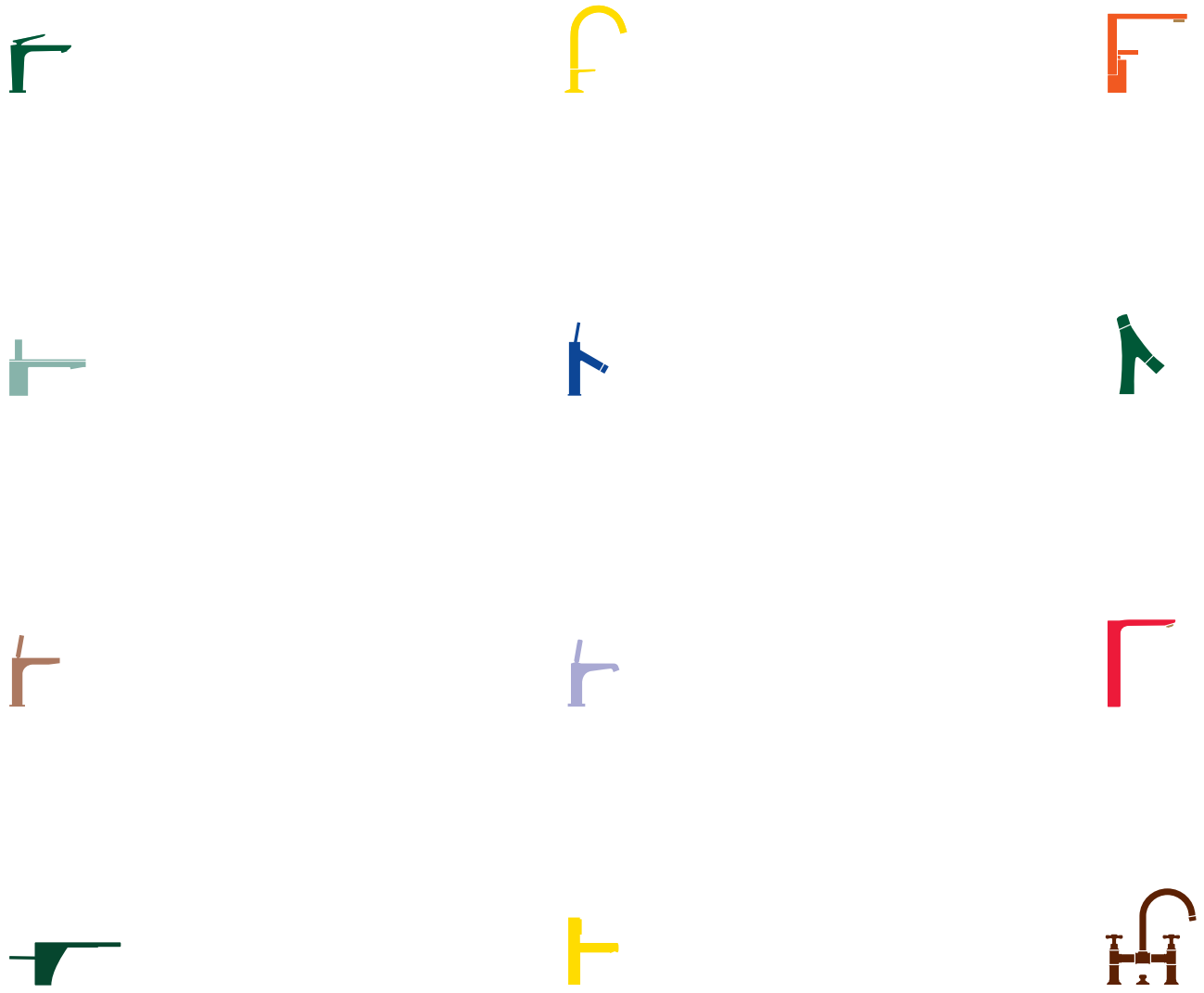

From classic to modern: AXOR faucets, showers, wash basins, bathtubs and accessories. Unique, avant-garde pieces and complete collections. Created with world-renowned designers. Uncompromising in quality. Full of pioneering innovations. In pursuit of perfection.

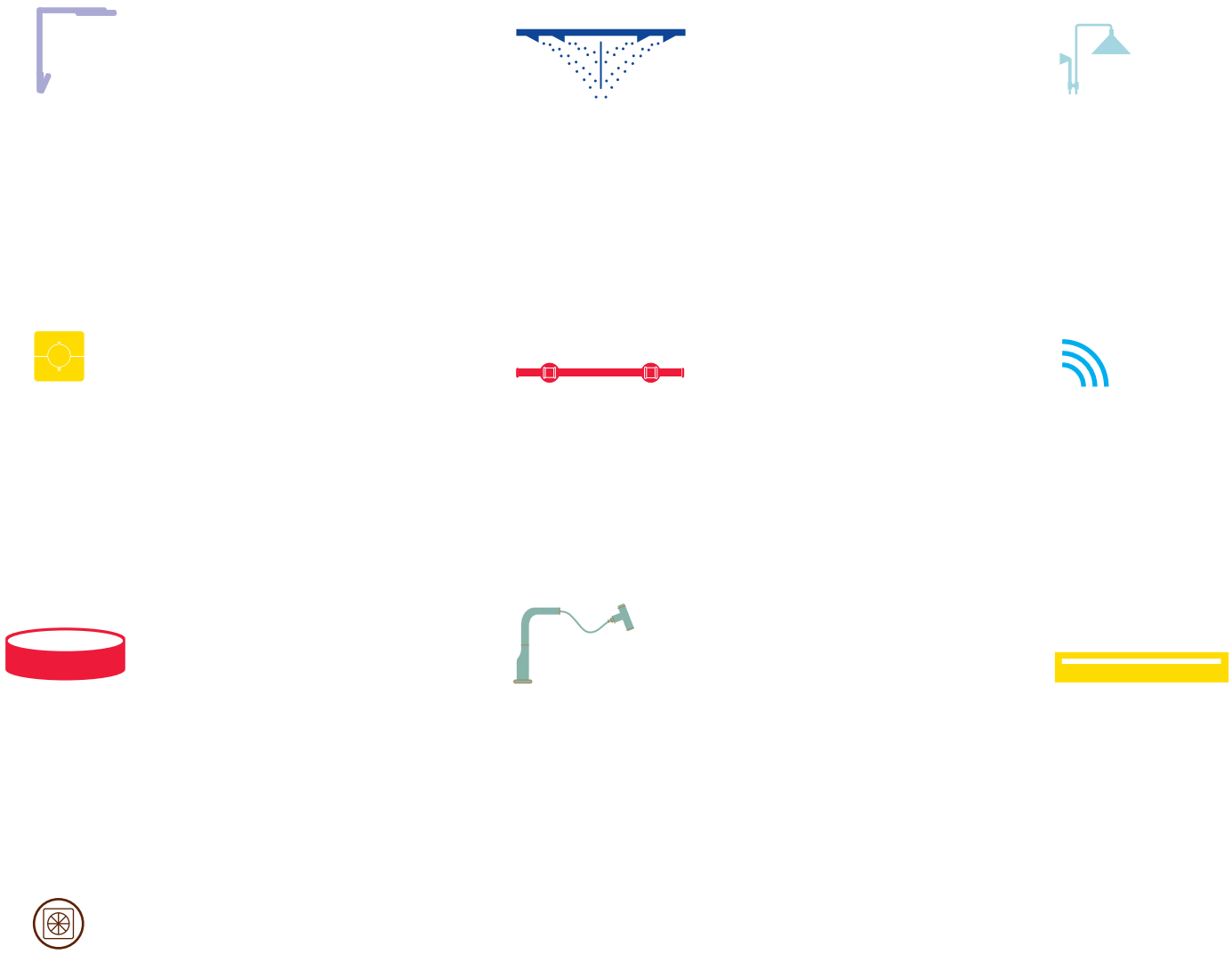

Uncompromisingly innovative

Pioneering ideas. Shaping water into invigorating jets, enveloping cocoons and sensual flows. Intuitive systems. Simple to use, easy to clean and ecologically responsible. Promoting conscious and conscientious water use. The result of intensive research and development, AXOR technologies are made in Germany to the highest quality standards—our own. In pursuit of perfection.

AIRPOWER-TECHNOLOGY:

Enriching water with air produces plump droplets for a velvety touch on the skin.

POWDERRAIN-TECHNOLOGY:

The finest silicone nozzles, with several openings per nozzle, provide a uniquely fine mist of water.

QUICKCLEAN-TECHNOLOGY:

Remove limescale deposits quickly and easily with flexible silicone nozzles.

SELECT-TECHNOLOGY:

Use the Select button to switch spray modes or shower heads; turn the water on and off at the faucet.

ECO-SMART-TECHNOLOGY:

Faucets and showers that consume up to 60% less water than our conventional products.

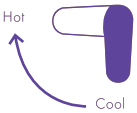

COOLSTART-TECHNOLOGY:

Cold water flows automatically when in the neutral handle position.

COMFORTZONE:

Defines the space between the wash basin and faucet. The larger the ComfortZone, the greater the variety of uses.

FLEXPOWER:

Flexible, elastic nozzles in the spray head ensure greater comfort and efficiency when showering.

AXOR FinishPlus

Robust, distinctive and personal: AXOR FinishPlus surfaces unlock a plethora of new possibilities to bring personal expression to your bathroom. Through a combination of meticulous craftsmanship and cutting-edge technologies, each finish is made to the highest standards of quality, color-fastness and scratch-resistance.

Whether you want to accentuate the design of a product or blend it seamlessly into the palette of your bathroom: AXOR FinishPlus offers a vast variety of colors and finish types to tailor any AXOR product to your personal taste. With most popular surfaces constantly in stock and the remaining finish types custom-made and shipped within six weeks, AXOR FinishPlus offers not only the best in personalization, but also the ultimate in convenience.

Choose your color.

ELECTROPLATED FINISHES

Chrome
-000

PVD SURFACES

Brushed Brass
-950

Polished Gold Optic
-990

Brushed Gold Optic
-250

Brushed Bronze
-140

Polished Red Gold
-300

Brushed Red Gold
-310

Brushed Nickel
-820

Stainless Steel Optic
-800

Polished Black Chrome -330

Brushed Black Chrome
-340

LACQUERED SURFACES

Matt Black
-670

Matt White
-700

→ Learn more about AXOR FinishPlus: axor-design.com

The masterly combination of high-tech and craftsmanship

ELECTROPLATING

Chrome is the standard surface in the sanitary environment and has proven itself in the bathroom over many decades. Through the electrochemical deposition of various metals, and depending on the type of substrate, a copper layer is built up in the electroplating bath, followed by a bright nickel and chrome layer on the basic brass body.

PVD

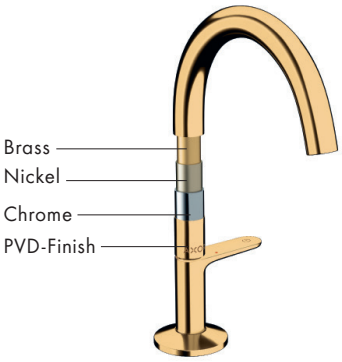

The unmistakable character of the polished and brushed AXOR FinishPlus PVD surfaces is the result of intensive development, refined in AXOR's in-house vacuum chambers using the physical vapor deposition (PVD) process. The PVD process gives the surfaces an additional metal layer. The vapor deposition of different process gas mixtures creates different light reflections on the surface. The result: exceptional color brilliance and high resistance. In order to reproduce a brushed surface, an additional work step is required in which the surface is textured with a brushing fleece by hand.

LACQUER

The wet-lacquered AXOR FinishPlus surfaces, Matt Black and Matt White, offer a bold color that gives the product a silky, smooth feel and simple elegance.

/ The beneficial properties of PVD surfaces include resistance to scratching, cleaning agents and salty sea air

AXOR FINISHPLUS

→ Learn more about AXOR FinishPlus: axor-design.com

AXOR Signature

Refining the special: AXOR Signature is an exclusive in-house service that makes any AXOR product one-of-a-kind. From local-language inscriptions and spout-length adaptions to custom engravings and the development of completely new products, AXOR Signature offers a comprehensive variety of services to meet the unique demands of any imaginable project and make it personal.

Make it yours.

BI-COLOR FINISHES

For those who can't decide on just one color, AXOR Signature offers the possibility to finish products in custom bi-color configurations, opening up a variety of new, exciting options to express individual tastes in the bathroom. The possibilities are virtually endless.

CUSTOM SYMBOLS FOR ENHANCED COMMUNICATION

AXOR Signature's labeling service does not just enhance the aesthetics of a product. It can also enhance the operation of a product itself. For hotel bathrooms, as an example, AXOR Signature provides the possibility to create lasered symbols or bespoke hot/cold markings to communicate a product's operation to first-time guests.

HIGH-PRECISION ENGRAVINGS AND MARKS

From personal emblems to logos and coats of arms: Labels and inscriptions can provide bathrooms with an extra layer of communication—and personality—that's especially important to projects in the hospitality industry. Meeting this demand, AXOR Signature offers a custom labeling and engraving service of the highest quality to set your bathroom apart.

→ Learn more about AXOR FinishPlus and AXOR Signature: axor-design.com

COMPONENT MIX

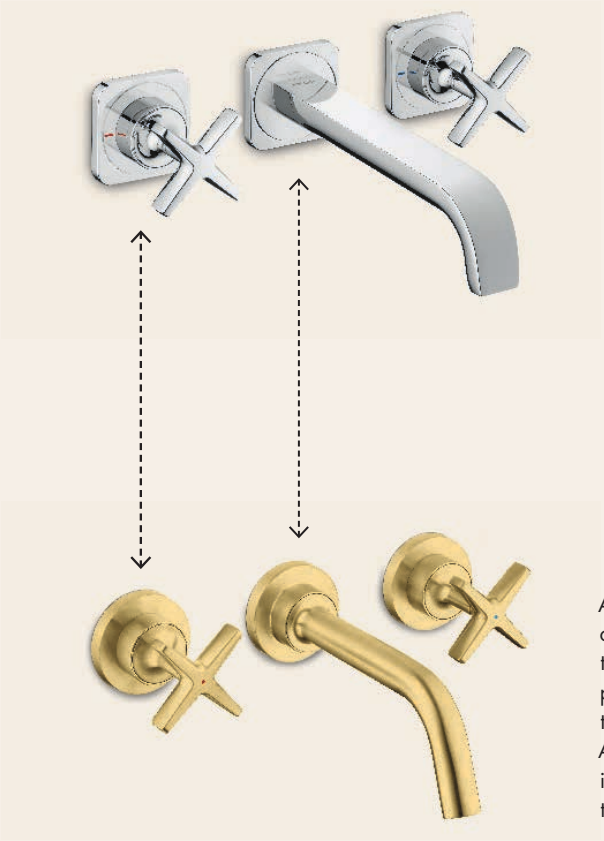

AXOR Signature allows customers to select and combine different components across AXOR collections to best match the individual character of your projects. Simple yet effective, the service is both a testament to the universal, enduring visions of each AXOR designer as it is an inventive method to creating new and inspiring interpretations of their collections.

HANDLE ENGRAVINGS

A delight to the eyes and touch: For select products, AXOR Signature offers a wide variety of custom 3D handle textures created by our world-renowned design partners. For other custom patterns, AXOR Signature is always ready to help create one of your own.

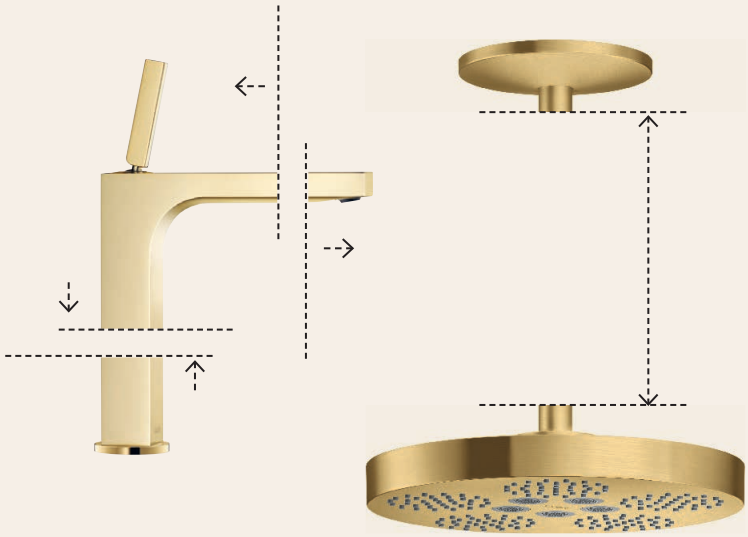

LENGTH ADAPTION

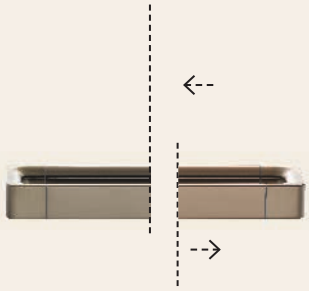

Each bathroom comes with its own, unique set of demands. Planners may, for example, need to lengthen or shorten a product to achieve a different distance from spout to washbasin, or from ceiling to shower head. AXOR Signature provides partners and customers the freedom to adapt a product as they wish, while maintaining the functionality, operation and unique aesthetic of its design.

NEW DEVELOPMENT

From precision-cut gemstone handles to custom-made soap dishes: With extensive technical expertise and decades of experience in collaborative product development, our AXOR Signature experts are well-suited and eager to work with partners and customers on bespoke, project-specific designs. The only limit is your imagination.

A new dimension of individualization

With materials such as metal, glass, wood, marble and leather, AXOR Signature creates an entirely new feel for mixers. The cover plates are carefully selected by AXOR experts and designed to meet high benchmarks for mixer use. Each plate is a one-of-a-kind original.

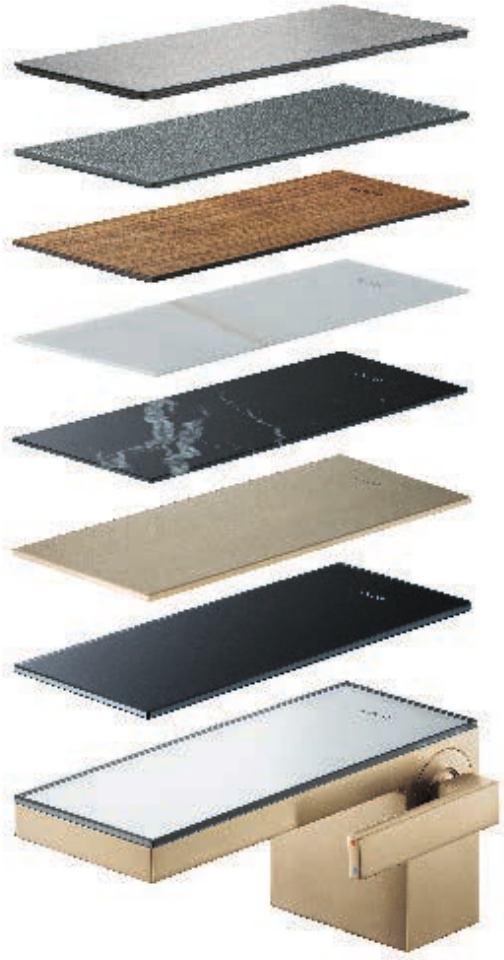

/ Natural materials impart an especially sensual look and feel

→ Exclusively for the AXOR MyEdition collection.

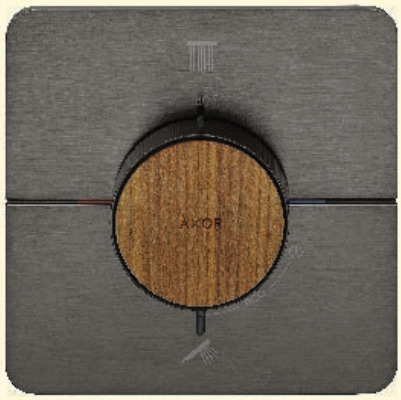

→ Learn more about AXOR Signature: axor-design.com

Inspiration and Information

To learn more about AXOR,
visit our website.

axor-design.com

AXOR Design

AXOR

axordesign

AXOR

axor.design

For AXOR, luxury means creating an experience of form and function. One that appeals to the
senses and touches people. An experience that begins on the AXOR website. For impressions of and information about all products. For bathroom inspiration and planning. For individualization and refinement possibilities. For background about the brand, the design and the technology.

Collections

AXOR Citterio C 58

AXOR One 100

AXOR Edge 142

AXOR MyEdition 166

AXOR Starck 192

AXOR Starck Organic 220

AXOR Citterio 236

AXOR Citterio E 272

AXOR Urquiola 304

AXOR Massaud 322

AXOR Uno 332

AXOR Montreux 358

Basin

Bidet

Bath

Thermostatic module /
bath and shower mixer

Overhead showers

Porter unit

Complementary products

AXOR CITTERIO C

DESIGN
–
ANTONIO CITTERIO

"Slender, soft and sensuous, AXOR Citterio C meets our need for greater comfort, reduced materiality and a lasting, contemporary design that works in any bathroom setting." ANTONIO CITTERIO

AXOR Citterio C

Contemporary, sophisticated, slender

Slender, elegant and exceptionally refined, AXOR Citterio C reinterprets the wash basin faucet for a new era, one that demands ever more comfort and individuality from ever smaller bathroom spaces.

Design: Antonio Citterio

Characteristic design feature:

AXOR Citterio C is distinguished by its slender verticality, its soft and sensuous form, its flat surfaces and its signature detail, a subtle chamfer that encircles every piece in the collection.

The designer's idea:

AXOR Citterio C had to be slender and compact, with a softness that spoke to our desire for a comfort and a reduced materiality that reflected the contemporary imperative to create more out of less. Above all, the design of each piece had to last, engaging and attracting the user not just at first glance but for the entire life of the product.

Special collection highlights:

/ AXOR Citterio C stands out from the rest with its conical body that subtly expands from its base.

/ The slender, minimalist form of the design complements the product's resource-saving CoolStart function.

/ For those wishing to make a more personal statement, AXOR Citterio C offers the standard option of handles in an exclusive cubic cut pattern.

/ AXOR Signature also offers three further readymade structures for greater freedom of individualization: soft cut, rhombic cut and linear cut.

/ AXOR Citterio C is the fourth collection created in collaboration with Antonio Citterio.

→ Learn more about AXOR Citterio C: axor-design.com

Innovative, down to the smallest detail.

Minimalist in spirit, with soft contours and a sensuous form, the faucet invites the touch while intriguing the eye from every angle.

Ergonomic lever handle

First-class operation. An optional cubic cut handle pattern provides the surface extra depth and a decorative touch.

Subtly-rounded edges

A signature element that defines the collection, emphasizing its sleek design.

Conical body

In distinctive contrast to usual mixer deisngs, the body of AXOR Citterio C widens from its base.

Standard CoolStart operation

The resource-saving CoolStart function and deminutive 5l/min flow rate of AXOR Citterio C reduce waste, CO2 emissions and costs.

A wide range of products brings the subtle yet distinctive design language of AXOR Citterio C to every area of the bathroom. At the wash basin, faucets come in three different heights–90mm, 125mm, and 250mm – and multiple types, including wall-mounted 2-hole and 3-hole versions.

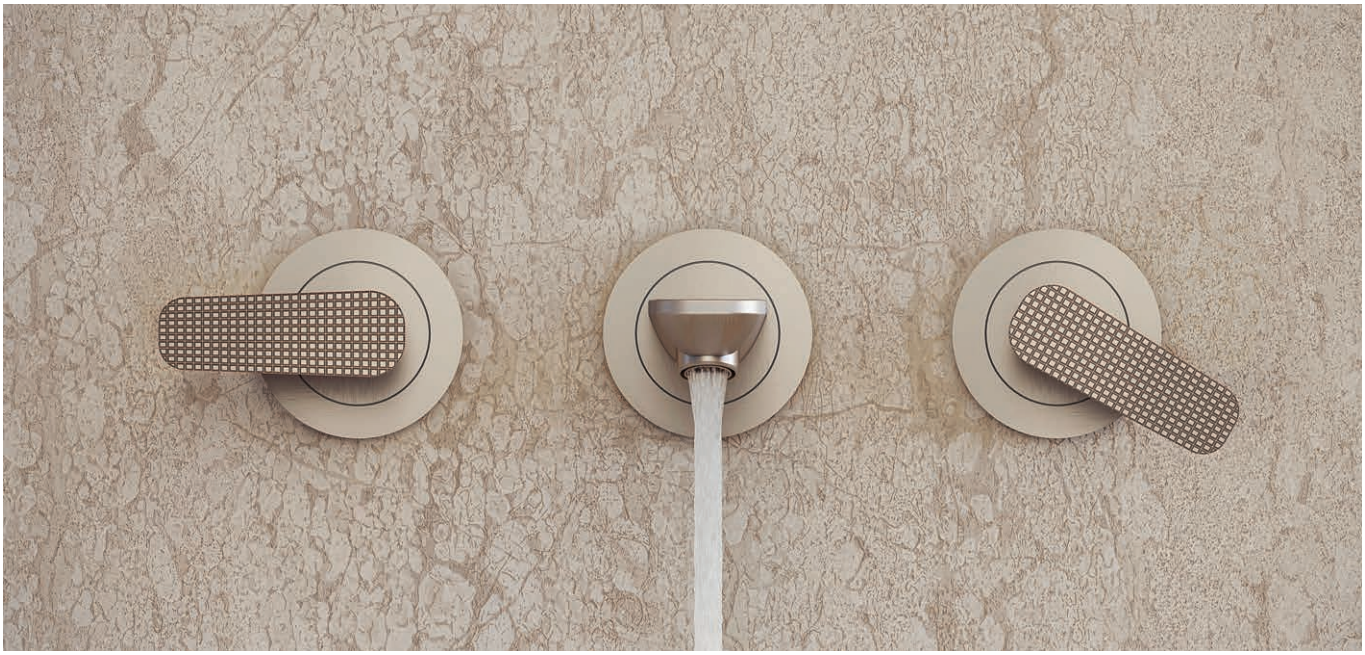

The collection's thermostatic module is available in two variants: as a 3 function version with separate escutcheons or as a 2 functions version with one plate.

Available in a wide variety of installation types and AXOR FinishPlus surfaces, AXOR Citterio C ideally complements nearly any bathroom.

At the bathtub as at the wash basin, faucets come in a variety of silhouettes and sizes. The options include a floor–standing bath mixer, a 3-hole rim mounted bath mixer including the sBox and a 3-hole wall-mounted bath mixer with shower holder.

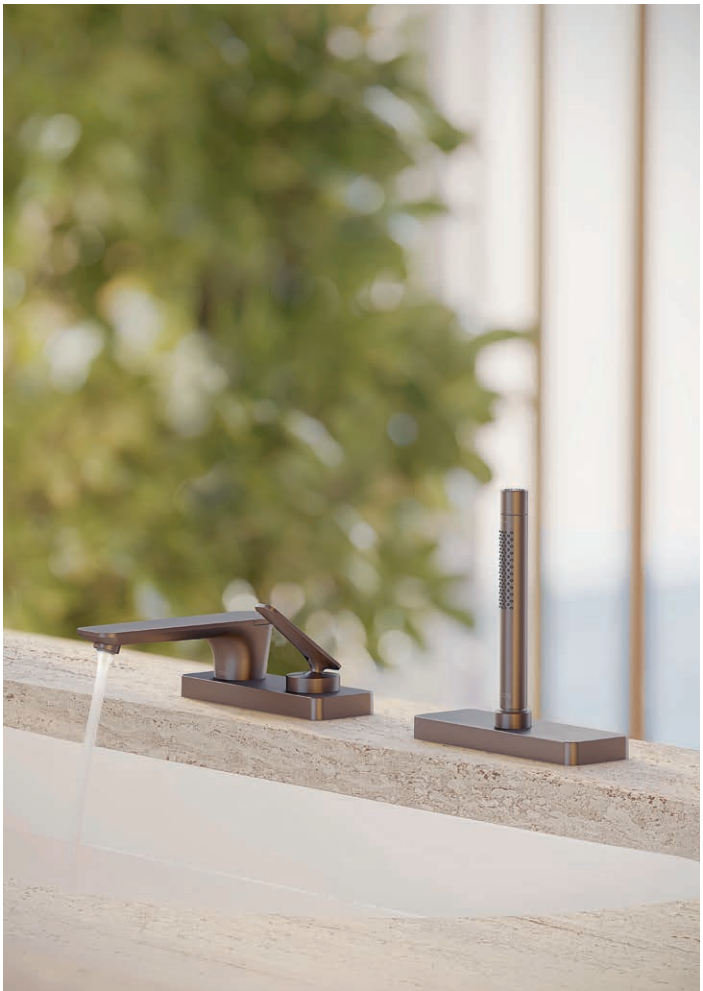

Custom AXOR FinishPlus surfaces and the collection's signature textured handles inspire unique, exciting combinations.

With an extensive variety of bathroom solutions to choose from, AXOR Citterio C offers a distinct, coherent language of design across the wash basin, bath and shower.

AXOR Individulization Services

AXOR FinishPlus

The exclusive surface finishes from AXOR FinishPlus set new standards, from the lacquered Matt Black surface to Polished Gold Optic and Brushed Black Chrome. Surfaces of exceptional brilliance, robustness, and durability, manufactured in Germany to the highest technical standards—from single pieces to large quantities. AXOR FinishPlus PVD surface finishes have character. Each color is the result of intensive development and refined in AXOR's vacuum chambers using the PVD (physical vapor deposition) process. An electric arcdischarges in the high vacuum, gases combine with zirconium. The mixture hits the faucet's chrome surface. This high-tech process gives the surface unprecedented brilliance and high resistance to scratches, cleaning agents, and the salt of the sea air.

SURFACE COLORS FROM STOCK

Chrome
-000

Matt Black
-670

Brushed Black Chrome
-340

Polished Gold Optic
-990

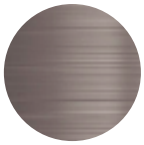

Brushed Nickel
-820

Brushed Bronze
-140

SURFACE COLORS WITH A PRODUCTION TIME OF MAX. 6 WEEKS* (EXCL. TRANSPORT)

Brushed Brass
-950

Brushed Gold Optic
-250

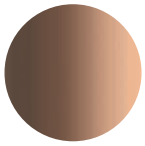

Polished Red Gold
-300

Brushed Red Gold
-310

Stainless Steel Optic
-800

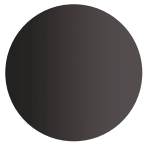

Polished Black Chrome
-330

*Please note that production times and stock availabilities are only valid for small quantities and may vary for project or bulk orders.

→ Learn more about AXOR FinishPlus: axor-design.com

AXOR Signature

AXOR Signature is an exclusive service that takes a design object and makes it one-of-a-kind, whether by providing each mixer with the customer's personal touch or by modifying it to fit specific dimensions. The personal and customized result manufactured by AXOR experts in Schiltach. With the utmost in care and precise craftsmanship in accordance with industrial standards.

Bi-color – AXOR Citterio C

A contrasting bi-color finish provides AXOR Citterio C a contemporary, elegant twist, emphasizing the poetic form of its handle and pairing especially well with an elegant handle engraving.

→ Learn more about AXOR Signature: axor-design.com

Structures via AXOR Signature

AXOR Citterio C is pushing the boundaries of individualization with the possibility to choose a textured pattern for the handle. In addition to the optional cubic cut, AXOR Signature offers three pre-defined structures: the soft cut, the rhombic cut and the linear cut for an even more personalized bathroom.

HANDLE STRUCTURES

SOFT CUT,
BY ANTONIO CITTERIO

RHOMBIC CUT,
BY ANTONIO CITTERIO

LINEAR CUT,
BY PHOENIX

In addition to the structure options offered as standard, the cubic cut pattern is available in fully-structured surface for "one-handle" arrangements and partially-structured surface for "two-handle" arrangements.

EXAMPLE

CUBIC CUT–HALF STRUCTURED
STANDARD PRODUCT

CUBIC CUT–FULLY STRUCTURED
AXOR SIGNATURE APPLICATION

Example representation of an individualization service. Further individualization options are possible through AXOR Signature.

→ Learn more about AXOR Signature: axor-design.com

Customize easily with the S-Tag

To request the customized product via AXOR Signature, the order number is composed of the model number, the finish and the individualization code, the S-Tag.

1. MODEL NUMBER: SELECT YOUR AXOR CITTERIO C PRODUCT

Single lever basin mixer 125
e.g. 49040XXX

3-hole rim mounted single lever bath mixer
with sBox e.g. 49430XXX

Thermostatic module 380/120
for 2 functions e.g. 49700XXX

2. FINISH: SELECT YOUR AXOR FINISHPLUS SURFACE

Chrome
-000

Matt Black
-670

Brushed Black Chrome
-340

Polished Gold Optic
-990

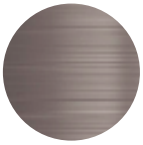

Brushed Nickel
-820

Brushed Bronze
-140

Brushed Brass
-950

Brushed Gold Optic
-250

Polished Red Gold
-300

Brushed Red Gold
-310

Stainless Steel Optic
-800

Polished Black Chrome
-330

3. S-TAG: SELECT YOUR HANDLE STRUCTURE

Soft Cut
–SOC

Rhombic Cut
–RHC

Linear Cut
–LIC

Cubic cut
- CCH Half structured
- CCF Fully structured

4. FINAL ORDERING NUMBER

49040-XXX

+

Brushed Black Chrome
-340

+

Linear Cut
–LIC

=

49040340+LIC

→ Learn more about AXOR Signature Service: axor-design.com

Single lever basin mixers CoolStart

Features of all variants

/ consists of: single lever basin mixer, waste set
/ handle variant: lever handle
/ spray type: normal spray
/ maximum flow rate at 3 bar: 5 l/min
/ ceramic cartridge
/ suitable for continuous flow water heaters
/ connection type: G ⅜ hose connections
/ connection dimension: DN15
/ cold water in basic handle position
/ EU taxonomy: max. 6 l/min – Substantial Contribution (SC) possible

90

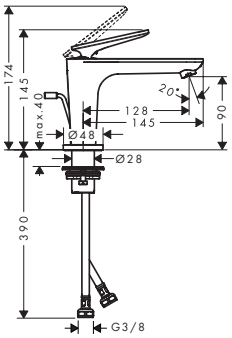

125 cubic cut

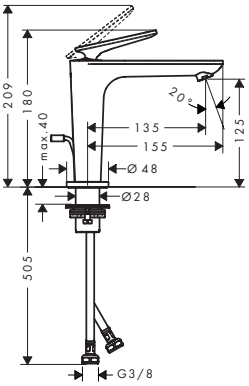

250

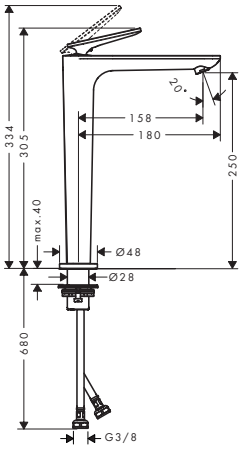

Special feature

Technologies

Overview variants

ComfortZone	Projection (mm)	Spout height (mm)	Waste set	For wash bowls	Structure element	Finish	Code no.
90	128	90	pop-up	–	without structure	Chrome	49010000
						Brushed Bronze	49010140
						Brushed Black Chrome	49010340
						Matt Black	49010670
						Brushed Nickel	49010820
						Polished Gold Optic	49010990
						AXOR FinishPlus*	49010XXX
90	128	90	pop-up	–	cubic cut	Chrome	49011000
						Brushed Bronze	49011140
						Brushed Black Chrome	49011340
						Matt Black	49011670
						Brushed Nickel	49011820
						Polished Gold Optic	49011990
						AXOR FinishPlus*	49011XXX
90	128	90	non-closing	–	without structure	Chrome	49020000
						Brushed Bronze	49020140
						Brushed Black Chrome	49020340
						Matt Black	49020670
						Brushed Nickel	49020820
						Polished Gold Optic	49020990
						AXOR FinishPlus*	49020XXX
90	128	90	non-closing	–	cubic cut	Chrome	49021000
						Brushed Bronze	49021140
						Brushed Black Chrome	49021340
						Matt Black	49021670
						Brushed Nickel	49021820
						Polished Gold Optic	49021990
						AXOR FinishPlus*	49021XXX

Measurements within scale drawings are in mm.
Technical specifications and units of measure are subject to change.

Single lever basin mixers CoolStart

Overview variants

ComfortZone	Projection (mm)	Spout height (mm)	Waste set	For wash bowls	Structure element	Finish	Code no.
125	135	125	pop-up	–	without structure	Chrome	49030000
						Brushed Bronze	49030140
						Brushed Black Chrome	49030340
						Matt Black	49030670
						Brushed Nickel	49030820
						Polished Gold Optic	49030990
						AXOR FinishPlus*	49030XXX
125	135	125	pop-up	–	cubic cut	Chrome	49031000
						Brushed Bronze	49031140
						Brushed Black Chrome	49031340
						Matt Black	49031670
						Brushed Nickel	49031820
						Polished Gold Optic	49031990
						AXOR FinishPlus*	49031XXX
125	135	125	non-closing	–	without structure	Chrome	49040000
						Brushed Bronze	49040140
						Brushed Black Chrome	49040340
						Matt Black	49040670
						Brushed Nickel	49040820
						Polished Gold Optic	49040990
						AXOR FinishPlus*	49040XXX
125	135	125	non-closing	–	cubic cut	Chrome	49041000
						Brushed Bronze	49041140
						Brushed Black Chrome	49041340
						Matt Black	49041670
						Brushed Nickel	49041820
						Polished Gold Optic	49041990
						AXOR FinishPlus*	49041XXX
250	158	250	non-closing	■	without structure	Chrome	49050000
						Brushed Bronze	49050140
						Brushed Black Chrome	49050340
						Matt Black	49050670
						Brushed Nickel	49050820
						Polished Gold Optic	49050990
						AXOR FinishPlus*	49050XXX
250	158	250	non-closing	■	cubic cut	Chrome	49051000
						Brushed Bronze	49051140
						Brushed Black Chrome	49051340
						Matt Black	49051670
						Brushed Nickel	49051820
						Polished Gold Optic	49051990
						AXOR FinishPlus*	49051XXX

*AXOR FinishPlus: For further AXOR FinishPlus surfaces please see the AXOR FinishPlus overview on page 44.

Single lever basin mixers for concealed installation wall-mounted

Features of all variants

/ consists of: single lever basin mixer for concealed installation wall-mounted, waste set
/ projection: 193 mm
/ handle variant: lever handle
/ spray type: normal spray
/ maximum flow rate at 3 bar: 5 l/min
/ ceramic cartridge
/ suitable for continuous flow water heaters
/ non-closing waste set
/ connection type: basic set
/ connection dimension: DN15
/ handle can be positioned on the right or left, depending on the basic set installation
/ EU taxonomy: max. 6 l/min – Substantial Contribution (SC) possible

cubic cut

Special feature

EcoSmart

Technologies

AirPower

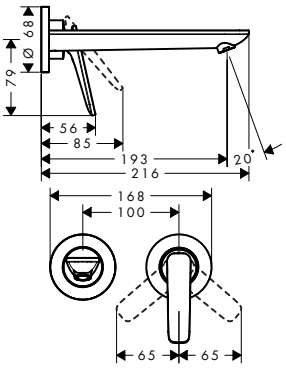

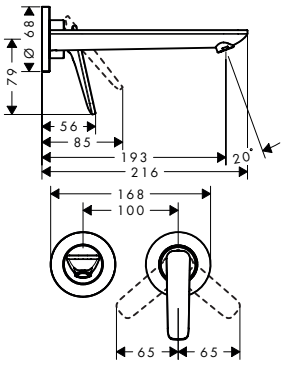

Overview variants

Projection (mm)	Structure element	Finish	Code no.
193	without structure	Chrome	49110000
		Brushed Bronze	49110140
		Brushed Black Chrome	49110340
		Matt Black	49110670
		Brushed Nickel	49110820
		Polished Gold Optic	49110990
		AXOR FinishPlus*	49110XXX
193	cubic cut	Chrome	49111000
		Brushed Bronze	49111140
		Brushed Black Chrome	49111340
		Matt Black	49111670
		Brushed Nickel	49111820
		Polished Gold Optic	49111990
		AXOR FinishPlus*	49111XXX

Required parts:	Code no.
Basic set for single lever basin mixer for concealed installation wall-mounted	13623180

Optional parts:	Code no.
Extension set 25 mm for single lever basin mixer wall-mounted	13586000

Measurements within scale drawings are in mm.
Technical specifications and units of measure are subject to change.

3-hole basin mixers

Features of all variants

/ consists of: 3-hole basin mixer, waste set
/ ComfortZone: 125
/ projection: 135 mm
/ spout height: 125 mm
/ handle variant: lever handle
/ spray type: normal spray
/ maximum flow rate at 3 bar: 5 l/min
/ ceramic valves hot/cold 90°
/ suitable for continuous flow water heaters
/ pop-up waste set G 1¼
/ connection type: G ⅜ hose connections
/ connection dimension: DN15
/ EU taxonomy: max. 6 l/min – Substantial Contribution (SC) possible

125

125 cubic cut

Special feature

EcoSmart

Technologies

AirPower

Comfort Zone

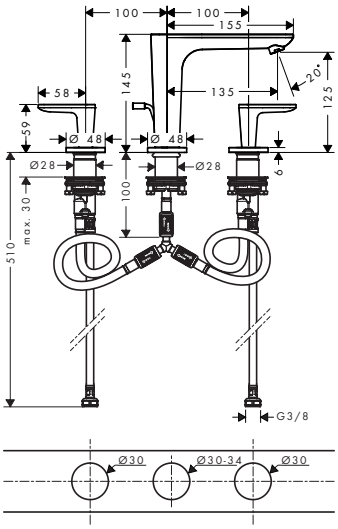

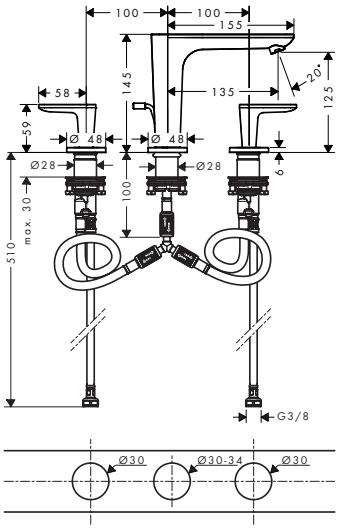

Overview variants

ComfortZone	Projection (mm)	Spout height (mm)	Structure element	Finish	Code no.
125	135	125	without structure	Chrome	49060000
				Brushed Bronze	49060140
				Brushed Black Chrome	49060340
				Matt Black	49060670
				Brushed Nickel	49060820
				Polished Gold Optic	49060990
				AXOR FinishPlus*	49060XXX
125	135	125	cubic cut	Chrome	49061000
				Brushed Bronze	49061140
				Brushed Black Chrome	49061340
				Matt Black	49061670
				Brushed Nickel	49061820
				Polished Gold Optic	49061990
				AXOR FinishPlus*	49061XXX

*AXOR FinishPlus: For further AXOR FinishPlus surfaces please see the AXOR FinishPlus overview on page 44.

3-hole basin mixers for concealed installation wall-mounted

Features of all variants

/ consists of: 3-hole basin mixer for concealed installation wall-mounted, waste set
/ projection: 193 mm
/ handle variant: lever handle
/ spray type: normal spray
/ maximum flow rate at 3 bar: 5 l/min
/ ceramic valves hot/cold 90°
/ suitable for continuous flow water heaters
/ non-closing waste set
/ connection type: basic set
/ connection dimension: DN15
/ EU taxonomy: max. 6 l/min – Substantial Contribution (SC) possible

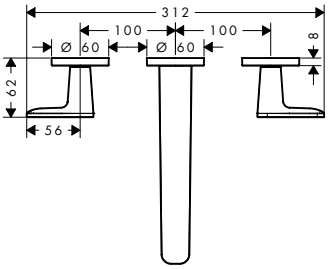

cubic cut

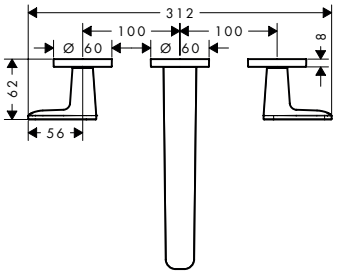

Special feature

EcoSmart

Technologies

AirPower

Overview variants

Projection (mm)	Structure element	Finish	Code no.
193	without structure	Chrome	49070000
		Brushed Bronze	49070140
		Brushed Black Chrome	49070340
		Matt Black	49070670
		Brushed Nickel	49070820
		Polished Gold Optic	49070990
		AXOR FinishPlus*	49070XXX
193	cubic cut	Chrome	49071000
		Brushed Bronze	49071140
		Brushed Black Chrome	49071340
		Matt Black	49071670
		Brushed Nickel	49071820
		Polished Gold Optic	49071990
		AXOR FinishPlus*	49071XXX

Required parts:		Code no.
	Basic set for 3-hole basin mixer for concealed installation wall-mounted	10303180

Optional parts:		Code no.
	Seal	96383000
	AXOR Starck Extension set 25 mm for basic set for 3-hole basin mixer wall-mounted	96259000

Measurements within scale drawings are in mm.
Technical specifications and units of measure are subject to change.

Single lever bidet mixers

Features of all variants

/ consists of: single lever bidet mixer, waste set
/ projection: 113 mm
/ spout height: 95 mm
/ ball-pivot joint
/ spray type: laminar spray
/ maximum flow rate at 3 bar: 7,5 l/min
/ ceramic cartridge
/ suitable for continous flow water heaters
/ pop-up waste set G 1¼
/ connection type: G ⅜ hose connections
/ connection dimension: DN15

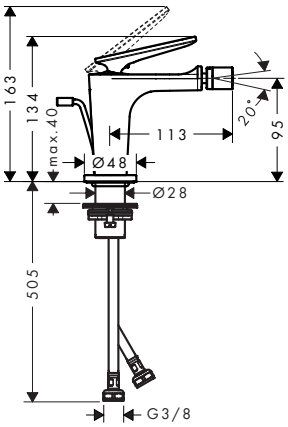

cubic cut

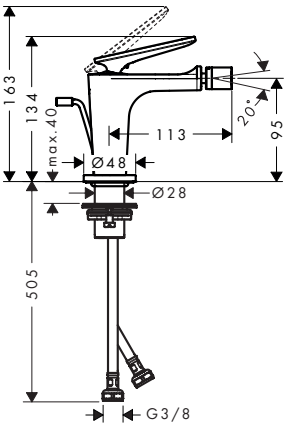

Overview variants

Structure element	Finish	Code no.
without structure	Chrome	49210000
	Brushed Bronze	49210140
	Brushed Black Chrome	49210340
	Matt Black	49210670
	Brushed Nickel	49210820
	Polished Gold Optic	49210990
	AXOR FinishPlus*	49210XXX
cubic cut	Chrome	49211000
	Brushed Bronze	49211140
	Brushed Black Chrome	49211340
	Matt Black	49211670
	Brushed Nickel	49211820
	Polished Gold Optic	49211990
	AXOR FinishPlus*	49211XXX

*AXOR FinishPlus: For further AXOR FinishPlus surfaces please see the AXOR FinishPlus overview on page 44.

Single lever bath mixers floor-standing

Features of all variants

/ consists of: single lever bath mixer floor standing, baton hand shower, shower hose, shower holder
/ 2 functions
/ projection: 194 mm
/ spray type mixer: laminar spray
/ maximum flow rate at 3 bar: 23,3 l/min
/ flow rate for bath spout at 3 bar: 23,3 l/min
/ flow rate of hand shower at 3 bar: 9,9 l/min
/ Ceramic cartridge
/ diverter with automatic resetting
/ non-return valve
/ connection dimension: DN15
/ connection type: basic set
/ deck mounted
/ min. operating pressure: 1 bar
/ max. operating pressure: 10 bar
/ spray type hand shower: Rain, MonoRain

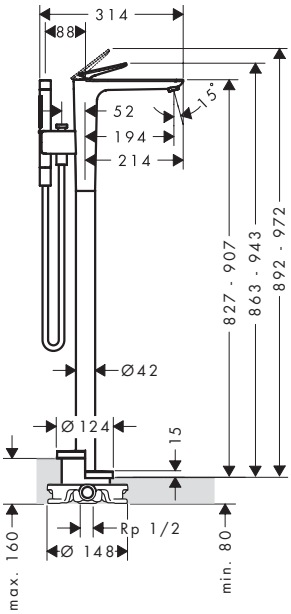

cubic cut

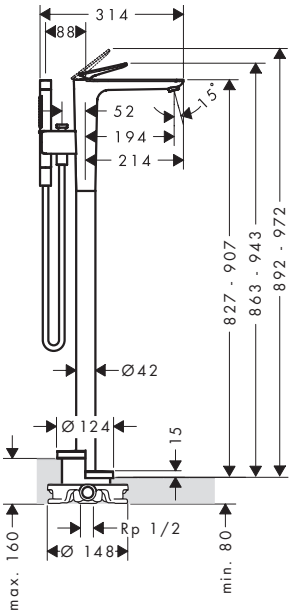

Spray types

Overview variants

Projection (mm)	Structure element	Finish	Code no.
194	without structure	Chrome	49440000
		Brushed Bronze	49440140
		Brushed Black Chrome	49440340
		Matt Black	49440670
		Brushed Nickel	49440820
		Polished Gold Optic	49440990
		AXOR FinishPlus*	49440XXX
194	cubic cut	Chrome	49441000
		Brushed Bronze	49441140
		Brushed Black Chrome	49441340
		Matt Black	49441670
		Brushed Nickel	49441820
		Polished Gold Optic	49441990
		AXOR FinishPlus*	49441XXX

Required parts:		Code no.
	Basic set for mixers floor-standing	10452180

Optional parts:		Code no.
	Sealing foil for basic set bath mixer floor-standing	96441000

Measurements within scale drawings are in mm.
Technical specifications and units of measure are subject to change.

3-hole bath mixer for concealed installation wall-mounted with hand shower

Features of all variants

/ consists of: 3-hole bath mixer, hand shower, shower holder, shower hose
/ 2 functions
/ projection: 222 mm
/ spray type mixer: normal spray
/ flow rate for bath spout at 3 bar: 20 l/min
/ flow rate of hand shower at 3 bar: 9,7 l/min
/ ceramic valves hot/cold 90°
/ diverter with automatic resetting
/ non-return valve
/ connection dimension: DN15
/ connection type: basic set
/ wall-mounted
/ min. operating pressure: 1 bar
/ max. operating pressure: 10 bar
/ spray type hand shower: Rain, MonoRain

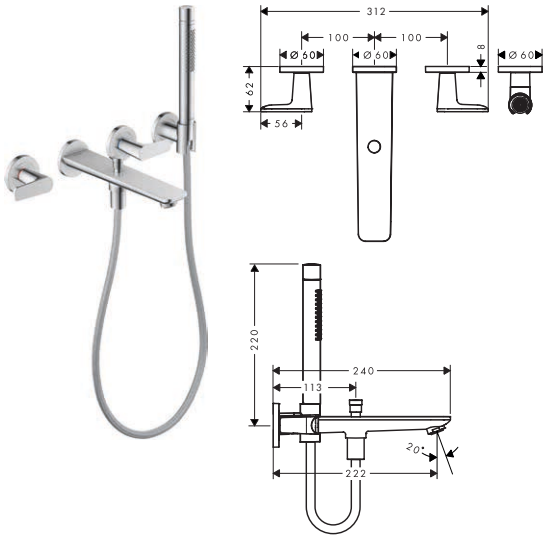

cubic cut

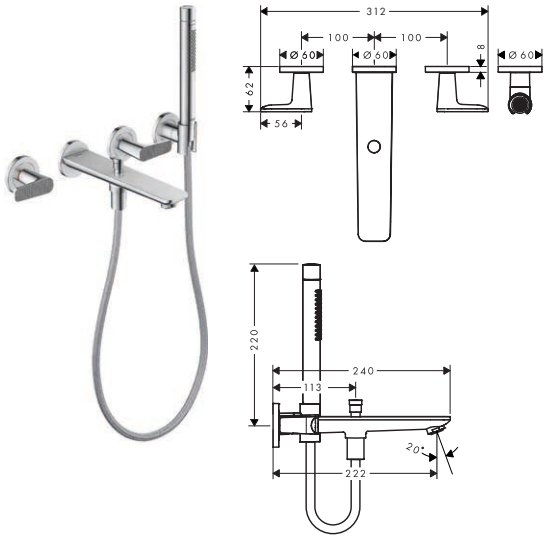

Technologies

Spray types

Overview variants

Projection (mm)	Structure element	Finish	Code no.
222	without structure	Chrome	49480000
		Brushed Bronze	49480140
		Brushed Black Chrome	49480340
		Matt Black	49480670
		Brushed Nickel	49480820
		Polished Gold Optic	49480990
		AXOR FinishPlus*	49480XXX
222	cubic cut	Chrome	49481000
		Brushed Bronze	49481140
		Brushed Black Chrome	49481340
		Matt Black	49481670
		Brushed Nickel	49481820
		Polished Gold Optic	49481990
		AXOR FinishPlus*	49481XXX

Required parts:		Code no.
	Basic set for 3-hole basin mixer for concealed installation wall-mounted	10303180

Optional parts:		Code no.
	Seal	96383000
	AXOR Starck Extension set 25 mm for basic set for 3-hole basin mixer wall-mounted	96259000

*AXOR FinishPlus: For further AXOR FinishPlus surfaces please see the AXOR FinishPlus overview on page 44.

3-hole bath mixer for concealed installation wall-mounted

Features of all variants

/ 1 function
/ projection: 222 mm
/ spray type mixer: normal spray
/ maximum flow rate at 3 bar: 20 l/min
/ flow rate for bath spout at 3 bar: 20 l/min
/ ceramic valves hot/cold 90°
/ connection type: basic set
/ wall-mounted
/ min. operating pressure: 1 bar
/ max. operating pressure: 10 bar

cubic cut

Technologies

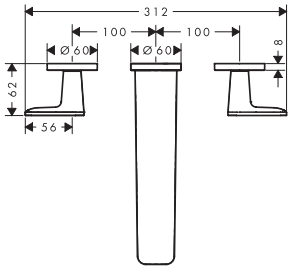

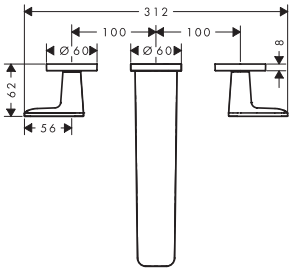

Overview variants

Projection (mm)	Structure element	Finish	Code no.
222	without structure	Chrome	49482000
		Brushed Bronze	49482140
		Brushed Black Chrome	49482340
		Matt Black	49482670
		Brushed Nickel	49482820
		Polished Gold Optic	49482990
		AXOR FinishPlus*	49482XXX
222	cubic cut	Chrome	49483000
		Brushed Bronze	49483140
		Brushed Black Chrome	49483340
		Matt Black	49483670
		Brushed Nickel	49483820
		Polished Gold Optic	49483990
		AXOR FinishPlus*	49483XXX

Required parts:		Code no.
	Basic set for 3-hole basin mixer for concealed installation wall-mounted	10303180

Optional parts:		Code no.
	Seal	96383000
	AXOR Starck Extension set 25 mm for basic set for 3-hole basin mixer wall-mounted	96259000

Measurements within scale drawings are in mm.
Technical specifications and units of measure are subject to change.

Single lever bath mixer for exposed installation

Features of all variants

/ 2 functions
/ projection: 200 mm
/ centre distance: 150 ± 16 mm
/ spray type mixer: normal spray
/ maximum flow rate at 3 bar: 22 l/min
/ flow rate for bath spout at 3 bar: 22 l/min
/ flow rate of hand shower at 3 bar: 16 l/min
/ ceramic cartridge
/ temperature limitation adjustable
/ diverter with automatic resetting
/ non-return valve
/ with silencer
/ suitable for continous flow water heaters
/ connection dimension: DN15
/ connection type: S-connections
/ wall-mounted
/ min. operating pressure: 1 bar
/ max. operating pressure: 10 bar

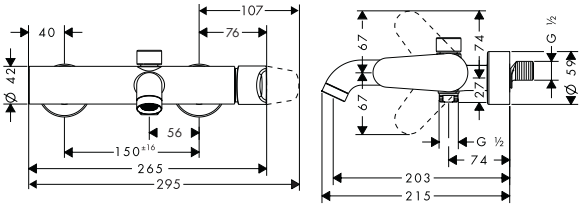

Technologies

Max. flow rate at 3 bar (l/min)	Finish	Code no.
22	Chrome	34420000
	AXOR FinishPlus*	34420XXX

*AXOR FinishPlus: For further AXOR FinishPlus surfaces please see the AXOR FinishPlus overview on page 44.

3-hole rim mounted single lever bath mixers

Features of all variants

/ consists of: 3-hole rim mounted single lever bath mixer, baton hand shower, shower holder
/ 2 functions
/ projection: 155 mm
/ spray type mixer: normal spray
/ maximum pull-out length of hand shower: 1,45 m
/ sBox for quiet, smooth and protected hose guidance
/ maximum flow rate at 3 bar: 20 l/min
/ flow rate for bath spout at 3 bar: 20 l/min
/ flow rate of hand shower at 3 bar: 10,6 l/min
/ ceramic cartridge
/ temperature limitation adjustable
/ non-return valve
/ suitable for continous flow water heaters
/ connection dimension: DN15
/ connection type: basic set
/ installation on bath rim
/ min. operating pressure: 1 bar
/ max. operating pressure: 10 bar
/ removable for service at any time
/ no additional maintenance opening required
/ spray type hand shower: Rain, MonoRain

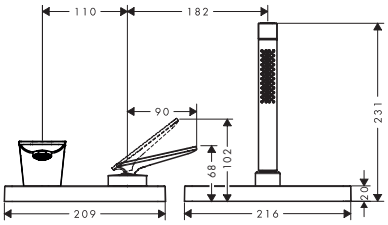

cubic cut

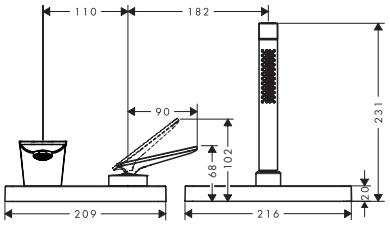

Technologies

Spray types

Overview variants

Projection (mm)	Structure element	Finish	Code no.
155	without structure	Chrome	49430000
		Brushed Bronze	49430140
		Brushed Black Chrome	49430340
		Matt Black	49430670
		Brushed Nickel	49430820
		Polished Gold Optic	49430990
		AXOR FinishPlus*	49430XXX
155	cubic cut	Chrome	49431000
		Brushed Bronze	49431140
		Brushed Black Chrome	49431340
		Matt Black	49431670
		Brushed Nickel	49431820
		Polished Gold Optic	49431990
		AXOR FinishPlus*	49431XXX

Required parts:		Code no.
	Basic set for 3-hole rim mounted single lever bath mixer	15487180
	AXOR Citterio C Installation plate	49449000

Measurements within scale drawings are in mm.
Technical specifications and units of measure are subject to change.

Installation plate

Features

/ installation: indispensable for rim mounted mixers with plate
/ material: metal
/ installation type: concealed installation

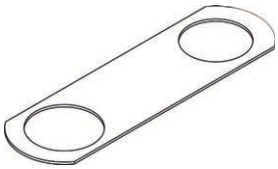

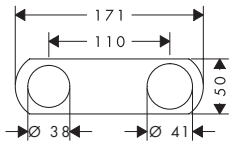

	Code no.
	49449000

Finish set softsquare

Features

/ consists of: hose box, shower hose, escutcheon
/ suitable for rim or tile mounted installation
/ 1 function
/ sBox for quiet, smooth and protected hose guidance
/ connection dimension: DN15
/ no additional maintenance opening required
/ bath rim width at least 80 mm
/ clamping range: 0 - 30 mm
/ maximum pull-out length of hand shower: 1,45 m
/ removable for service at any time
/ protected against backflow, according to DIN EN 1717
/ maximum flow rate at 3 bar: 9,5 l/min

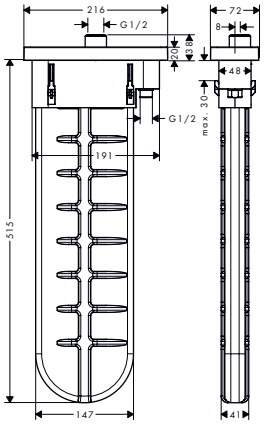

Finish	Code no.
Chrome	28017000
Brushed Bronze	28017140
Brushed Black Chrome	28017340
Matt Black	28017670
Brushed Nickel	28017820
Polished Gold Optic	28017990
AXOR FinishPlus*	28017XXX

Required parts:		Code no.
	sBox Rim and tile mounted bath basic set	15490180

Optional parts:		Code no.
	sBox Mounting angle set for installation plate for tile mounted installation	28011000
	sBox Installation plate for tile mounted installation	28014000

Bath spout

Features of all variants

/ 1 function
/ projection: 222 mm
/ maximum flow rate at 3 bar: 24,5 l/min
/ connection dimension: DN15
/ spray type: normal spray

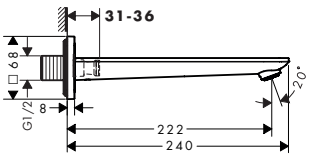

Technologies

For more information about this product, please see the next page.

*AXOR FinishPlus: For further AXOR FinishPlus surfaces please see the AXOR FinishPlus overview on page 44.

Bath spout

Projection (mm)	Finish	Code no.
222	Chrome	49410000
	Brushed Bronze	49410140
	Brushed Black Chrome	49410340
	Matt Black	49410670
	Brushed Nickel	49410820
	Polished Gold Optic	49410990
	AXOR FinishPlus*	49410XXX

Single lever shower mixer for exposed installation

Features of all variants

/ 1 function
/ centre distance: 150 ± 16 mm
/ maximum flow rate at 3 bar: 26 l/min
/ flow rate of hand shower at 3 bar: 19 l/min
/ ceramic cartridge
/ temperature limitation adjustable
/ non-return valve
/ with silencer
/ suitable for continous flow water heaters
/ hose connection: DN15
/ connection dimension: DN15
/ min. operating pressure: 1 bar
/ max. operating pressure: 10 bar
/ connection type: S-connections

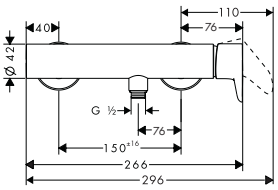

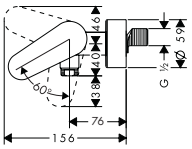

Max. flow rate at 3 bar (l/min)	Finish	Code no.
26	Chrome	34620000
	AXOR FinishPlus*	34620XXX

Bath thermostat for exposed installation

Features of all variants

/ projection 180 mm
/ 2 functions
/ thermostat cartridge, shut-off/ diverter valve
/ spray type spout: normal spray
/ maximum flow rate at 3 bar: 21 l/min
/ flow rate for bath spout at 3 bar: 21 l/min
/ flow rate of hand shower at 3 bar: 17 l/min
/ min. operating pressure: 1 bar
/ max. operating pressure: 10 bar
/ Safety stop at 40 °C
/ temperature limitation adjustable
/ non-return valve
/ with silencer
/ connection dimension: DN15
/ connection type: S-connections
/ centre distance: 150 ± 12 mm

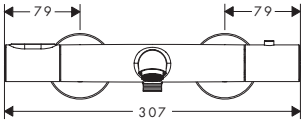

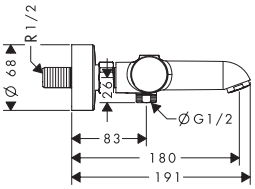

Special feature

Technologies

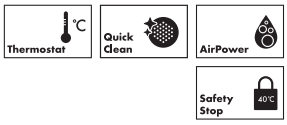

Centre distance (mm)	Finish	Code no.
150	Chrome	34435000
	AXOR FinishPlus*	34435XXX

Measurements within scale drawings are in mm.
Technical specifications and units of measure are subject to change.

Shower thermostat for exposed installation

Features of all variants

/ 1 function
/ thermostat cartridge, ceramic valve 180°
/ maximum flow rate at 3 bar: 20 l/min
/ min. operating pressure: 1 bar
/ max. operating pressure: 10 bar
/ Safety stop at 40 °C
/ temperature limitation adjustable
/ non-return valve
/ with silencer
/ centre distance: 150 ± 12 mm
/ connection dimension: DN15
/ connection type: S-connections

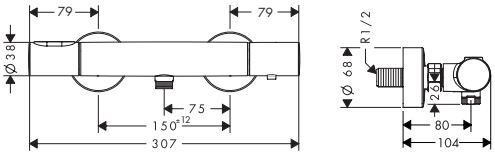

Special feature

Water Flow Control

Technologies

Thermostat, Safety Stop

Certificates/declarations

EPD

Centre distance (mm)	Finish	Code no.
150	Chrome	34635000
	AXOR FinishPlus*	34635XXX

Thermostatic modules concealed installation with plate

Features of all variants

/ 2 functions
/ simultaneous utilization of 2 functions
/ thermostat cartridge
/ maximum flow rate at 3 bar: 30 l/min
/ min. operating pressure: 1 bar
/ max. operating pressure: 10 bar
/ combination of highflow thermostat with shut-off valve and Duo diverter valve for controlling 2 consumers
/ Safety stop at 40 °C
/ temperature limitation adjustable
/ connection dimension: DN20
/ connection type: basic set

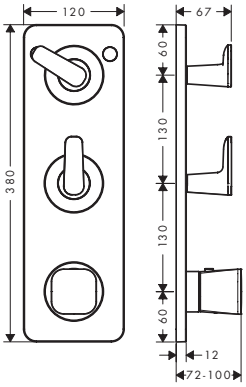

cubic cut

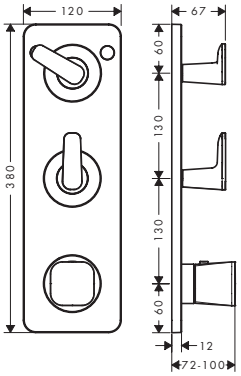

Special feature

Water Flow Control

Technologies

Thermostat, Safety Stop

Overview variants

Structure element	Max. flow rate at 3 bar (l/min)	Finish	Code no.
without structure	30	Chrome	49700000
		Brushed Bronze	49700140
		Brushed Black Chrome	49700340
		Matt Black	49700670
		Brushed Nickel	49700820
		Polished Gold Optic	49700990
		AXOR FinishPlus*	49700XXX

For more information about this product, please see the next page.

*AXOR FinishPlus: For further AXOR FinishPlus surfaces please see the AXOR FinishPlus overview on page 44.

Thermostatic modules concealed installation with plate

Overview variants

Structure element	Max. flow rate at 3 bar (l/min)	Finish	Code no.
cubic cut	30	Chrome	49701000
		Brushed Bronze	49701140
		Brushed Black Chrome	49701340
		Matt Black	49701670
		Brushed Nickel	49701820
		Polished Gold Optic	49701990
		AXOR FinishPlus*	49701XXX

Required parts:	Code no.
AXOR Citterio E Basic set for thermostatic module 380/120 for concealed installation for 2 functions	36701180

Thermostatic modules concealed installation with escutcheons

Features of all variants

/ consists of: shower thermostat, shut-off/diverter valve, shut-off valve
/ 3 functions
/ thermostat cartridge
/ maximum flow rate at 3 bar: 30 l/min
/ min. operating pressure: 1 bar
/ max. operating pressure: 10 bar
/ combination of highflow thermostat with shut-off valve and Quattro diverter valve for controlling 3 consumers
/ Safety stop at 40 °C
/ temperature limitation adjustable
/ connection dimension: DN20
/ connection type: basic set

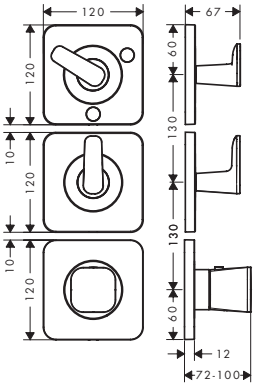

cubic cut

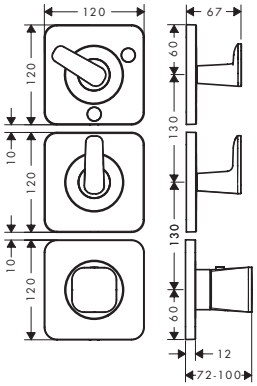

Special feature

Technologies

Overview variants

Structure element	Max. flow rate at 3 bar (l/min)	Finish	Code no.
without structure	30	Chrome	49710000
		Brushed Bronze	49710140
		Brushed Black Chrome	49710340
		Matt Black	49710670
		Brushed Nickel	49710820
		Polished Gold Optic	49710990
		AXOR FinishPlus*	49710XXX

Measurements within scale drawings are in mm.
Technical specifications and units of measure are subject to change.

Thermostatic modules concealed installation with escutcheons

Overview variants

Structure element	Max. flow rate at 3 bar (l/min)	Finish	Code no.
cubic cut	30	Chrome	49711000
		Brushed Bronze	49711140
		Brushed Black Chrome	49711340
		Matt Black	49711670
		Brushed Nickel	49711820
		Polished Gold Optic	49711990
		AXOR FinishPlus*	49711XXX

Required parts:		Code no.
	AXOR Citterio E Basic set for thermostatic module 380/120 for concealed installation for 3 functions	36708180

Thermostat for concealed installation softsquare for 1 function

Features

/ 1 function
/ comfortable turning on / off of outlets with large Select-paddle, precise temperature control thanks to vertical handle structure and haptic feedback from the thermostat handle
/ water flow control with stop function
/ thermostat cartridge
/ maximum flow rate at 1 bar: 10,8 l/min
/ maximum flow rate at 3 bar: 20,3 l/min
/ min. operating pressure: 1 bar
/ max. operating pressure: 10 bar
/ flat escutcheon for more space in the shower
/ escutcheon can be aligned by +/- 3°
/ easy installation due to pre-assembled function block
/ handles always at the same height regardless of the installation depth of the basic set
/ Safety stop at 40 °C
/ temperature limitation adjustable
/ the thermostat offers the possibility for thermal disinfection
/ material button: metal
/ material handles: metal
/ connection type: basic set iBox universal 2 (# 01400180)
/ Select-paddle is delivered with lasered On/Off symbol

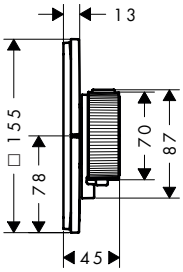

Special feature

Technologies

Finish	Code no.
Chrome	36758000
Brushed Bronze	36758140
Brushed Black Chrome	36758340
Matt Black	36758670
Brushed Nickel	36758820
Polished Gold Optic	36758990
AXOR FinishPlus*	36758XXX

Required parts:		Code no.
	AXOR iBox universal 2 Basic set	01400180

*AXOR FinishPlus: For further AXOR FinishPlus surfaces please see the AXOR FinishPlus overview on page 44.

Thermostat for concealed installation softsquare for 2 functions

Features

/ 2 functions
/ simultaneous use of several outlets
/ comfortable turning on / off of outlets with large Select-paddle, precise temperature control thanks to vertical handle structure and haptic feedback from the thermostat handle
/ water flow control with stop function
/ thermostat cartridge, Start/stop valve to operate the functions
/ maximum flow rate at 1 bar: 12,7 l/min
/ flow rate upper outlet: 20 l/min
/ flow rate lower outlet: 20 l/min
/ maximum flow rate at 3 bar: 22,1 l/min
/ min. operating pressure: 1 bar
/ max. operating pressure: 10 bar
/ flat escutcheon for more space in the shower
/ escutcheon can be aligned by +/- 3°
/ easy installation due to pre-assembled function block
/ handles always at the same height regardless of the installation depth of the basic set
/ Safety stop at 40 °C
/ temperature limitation adjustable
/ the thermostat offers the possibility for thermal disinfection
/ material button: metal
/ material handles: metal
/ connection type: basic set iBox universal 2 (# 01400180)
/ Select-paddles are delivered with lasered user symbols (Rain large and hand shower)

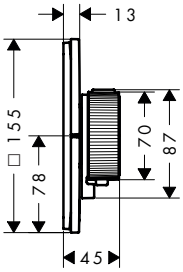

Special feature

Technologies

Finish	Code no.
Chrome	36754000
Brushed Bronze	36754140
Brushed Black Chrome	36754340
Matt Black	36754670
Brushed Nickel	36754820
Polished Gold Optic	36754990
AXOR FinishPlus*	36754XXX

Required parts:	Code no.
AXOR iBox universal 2 Basic set	01400180

Measurements within scale drawings are in mm.
Technical specifications and units of measure are subject to change.

Thermostat for concealed installation softsquare for 2 functions with integrated security combination according to EN1717

Features

/ 2 functions
/ comfortable turning on / off of outlets with large Select-paddle, precise temperature control thanks to vertical handle structure and haptic feedback from the thermostat handle
/ water flow control with stop function
/ thermostat cartridge, Start/stop valve to operate the functions
/ maximum flow rate at 1 bar: 14 l/min
/ flow rate upper outlet: 23 l/min
/ flow rate lower outlet: 23 l/min
/ maximum flow rate at 3 bar: 26 l/min
/ min. operating pressure: 1 bar
/ max. operating pressure: 10 bar
/ flat escutcheon for more space in the shower
/ escutcheon can be aligned by +/- 3°
/ easy installation due to pre-assembled function block
/ handles always at the same height regardless of the installation depth of the basic set
/ Safety stop at 40 °C
/ temperature limitation adjustable
/ the thermostat offers the possibility for thermal disinfection
/ with integrated safety combination EN 1717
/ material button: metal
/ material handles: metal
/ connection type: basic set iBox universal 2 (# 01400180)
/ Select-paddles are delivered with lasered user symbols (hand shower and bath tub)

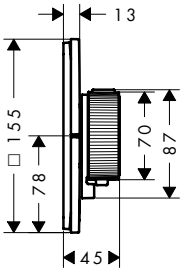

Special feature

Technologies

Finish	Code no.
Chrome	36755000
Brushed Bronze	36755140
Brushed Black Chrome	36755340
Matt Black	36755670
Brushed Nickel	36755820
Polished Gold Optic	36755990
AXOR FinishPlus*	36755XXX

Required parts:	Code no.
AXOR iBox universal 2 Basic set	01400180

*AXOR FinishPlus: For further AXOR FinishPlus surfaces please see the AXOR FinishPlus overview on page 44.

Thermostat HighFlow for concealed installation softsquare

Features

/ temperature and water flow control, precise temperature control thanks to vertical handle structure and haptic feedback from the thermostat handle
/ water flow control with stop function
/ thermostat cartridge
/ maximum flow rate at 1 bar: 11,5 l/min
/ flow rate upper outlet: 27 l/min
/ flow rate lower outlet: 27 l/min
/ flow rate by simultaneous use of all outlets: 34,8 l/min
/ maximum flow rate at 3 bar: 27 l/min
/ min. operating pressure: 1 bar
/ max. operating pressure: 10 bar
/ flat escutcheon for more space in the shower
/ escutcheon can be aligned by +/- 3 °
/ easy installation due to pre-assembled function block
/ handles always at the same height regardless of the installation depth of the basic set
/ Safety stop at 40 °C
/ temperature limitation adjustable
/ material button: metal
/ material handles: metal
/ connection type: basic set iBox universal 2 (# 01400180)

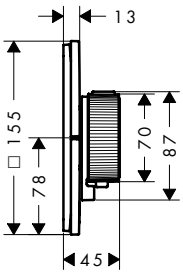

Special feature

Technologies

Finish	Code no.
Chrome	36775000
Brushed Bronze	36775140
Brushed Black Chrome	36775340
Matt Black	36775670
Brushed Nickel	36775820
Polished Gold Optic	36775990
AXOR FinishPlus*	36775XXX

Required parts:		Code no.
	AXOR iBox universal 2 Basic set	01400180

Optional parts:		Finish	Code no.
	AXOR ShowerSelect ID Valve for concealed installation softsquare for 3 functions	Chrome	36781000
		Brushed Bronze	36781140
		Brushed Black Chrome	36781340
		Matt Black	36781670
		Brushed Nickel	36781820
		Polished Gold Optic	36781990
		AXOR FinishPlus*	36781XXX

Measurements within scale drawings are in mm.
Technical specifications and units of measure are subject to change.

Thermostat HighFlow for concealed installation SoftSquare for 1 function and additional outlet

Features

/ 1 function and 1 additional outlet
/ Select push-button on/off control for 1 outlet, precise temperature control thanks to vertical handle structure and haptic feedback from the thermostat handle
/ water flow control with stop function
/ thermostat cartridge, Start/stop valve to operate the functions
/ maximum flow rate at 1 bar: 18,5 l/min
/ flow rate upper outlet: 23 l/min
/ flow rate lower outlet: 23 l/min
/ maximum flow rate at 3 bar: 32,8 l/min
/ min. operating pressure: 1 bar
/ max. operating pressure: 10 bar
/ flat escutcheon for more space in the shower
/ escutcheon can be aligned by +/- 3°
/ easy installation due to pre-assembled function block
/ handles always at the same height regardless of the installation depth of the basic set
/ Safety stop at 40 °C
/ temperature limitation adjustable
/ the thermostat offers the possibility for thermal disinfection
/ material button: metal
/ material handles: metal
/ connection type: basic set iBox universal 2 (# 01400180)
/ thermostat is delivered with buttons hand shower, bath tub, whirl, body shower and On/Off

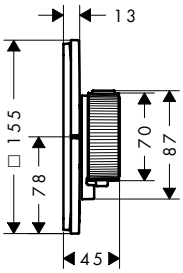

Special feature

Technologies

Finish	Code no.
Chrome	36778000
Brushed Bronze	36778140
Brushed Black Chrome	36778340
Matt Black	36778670
Brushed Nickel	36778820
Polished Gold Optic	36778990
AXOR FinishPlus*	36778XXX

Required parts:	Code no.
AXOR iBox universal 2 Basic set	01400180

Optional parts:	Finish	Code no.
AXOR ShowerSelect ID Valve for concealed installation softsquare for 3 functions	Chrome	36781000
	Brushed Bronze	36781140
	Brushed Black Chrome	36781340
	Matt Black	36781670
	Brushed Nickel	36781820
	Polished Gold Optic	36781990
	AXOR FinishPlus*	36781XXX

*AXOR FinishPlus: For further AXOR FinishPlus surfaces please see the AXOR FinishPlus overview on page 44.

Valve for concealed installation softsquare for 3 functions

Features

/ 3 functions
/ simultaneous use of several outlets
/ comfortable turning on / off of outlets with large Select-paddle
/ Start/stop valve to operate the functions
/ flow rate upper outlet: 26 l/min
/ flow rate left and right: 26 l/min
/ maximum flow rate at 3 bar: 32 l/min
/ min. operating pressure: 1 bar
/ max. operating pressure: 10 bar
/ escutcheon can be aligned by +/- 3°
/ easy installation due to pre-assembled function block
/ flat escutcheon for more space in the shower
/ valve is delivered with buttons Rain small, Rain large, hand sower, Waterfall and MonoRain
/ material button: metal

Finish	Code no.
Chrome	36781000
Brushed Bronze	36781140
Brushed Black Chrome	36781340
Matt Black	36781670
Brushed Nickel	36781820
Polished Gold Optic	36781990
AXOR FinishPlus*	36781XXX

Required parts:		Code no.
	AXOR iBox universal 2 Basic set	01400180

Optional parts:		Finish	Code no.
	AXOR ShowerSelect ID Thermostat HighFlow for concealed installation SoftSquare for 1 function and additional outlet	Chrome	36778000
		Brushed Bronze	36778140
		Brushed Black Chrome	36778340
		Matt Black	36778670
		Brushed Nickel	36778820
		Polished Gold Optic	36778990
		AXOR FinishPlus*	36778XXX
	AXOR ShowerSelect ID Thermostat HighFlow for concealed installation softsquare	Chrome	36775000
		Brushed Bronze	36775140
		Brushed Black Chrome	36775340
		Matt Black	36775670
		Brushed Nickel	36775820
		Polished Gold Optic	36775990
		AXOR FinishPlus*	36775XXX

Measurements within scale drawings are in mm.
Technical specifications and units of measure are subject to change.

Mixers for concealed installation

Features of all variants

/ maximum flow rate at 3 bar: 29,5 l/min
/ maximum flow rate at 1 bar: 15 l/min
/ with silencer
/ flat escutcheon for more space in the shower
/ easy installation due to pre-assembled function block
/ handles always at the same height regardless of the installation depth of the basic set
/ escutcheon can be aligned by +/- 3°
/ material escutcheon: metal
/ material handles: metal
/ min. operating pressure: 1 bar
/ max. operating pressure: 10 bar
/ connection type: basic set iBox universal 2 (# 01400180)

1 function

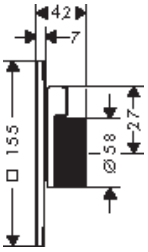

2 functions

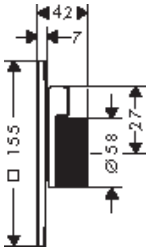

Special feature

Overview variants

Number of functions	Max. flow rate at 3 bar (l/min)	Finish	Code no.
1 function	29.5	Chrome	49651000
		Brushed Bronze	49651140
		Brushed Black Chrome	49651340
		Matt Black	49651670
		Brushed Nickel	49651820
		Polished Gold Optic	49651990
		AXOR FinishPlus*	49651XXX
2 functions	29.5	Chrome	49451000
		Brushed Bronze	49451140
		Brushed Black Chrome	49451340
		Matt Black	49451670
		Brushed Nickel	49451820
		Polished Gold Optic	49451990
		AXOR FinishPlus*	49451XXX

Required parts:		Code no.
	AXOR iBox universal 2 Basic set	01400180

Optional parts:		For	Finish	Code no.
	AXOR ShowerSelect ID Extension element softsquare 5 mm		Chrome	13640000
			Brushed Bronze	13640140
			Brushed Black Chrome	13640340
			Polished Gold Optic	13640990
			AXOR FinishPlus*	13640XXX
	AXOR ShowerSelect ID Extension element softsquare 22 mm		Chrome	13643000
			Brushed Bronze	13643140
			Brushed Black Chrome	13643340
			Matt Black	13643670
			Polished Gold Optic	13643990
			AXOR FinishPlus*	13643XXX
	Adapter for extension element E/Q			13628000

For more information about this product, please see the next page.

*AXOR FinishPlus: For further AXOR FinishPlus surfaces please see the AXOR FinishPlus overview on page 44.

Mixers for concealed installation

Optional parts:		For	Finish	Code no.
	Extension finish sets 25 - 75 mm			13632000
	Extension finish sets 25 mm			13638000
	Security combination according to EN 1717	49451XXX		13077000

Overhead shower 120/120 1jet EcoSmart with shower arm

Features of all variants

/ consists of: overhead shower, shower arm
/ shower head size: 120 x 120 mm
/ spray type: PowderRain
/ flow regulator: 7 l/min (with possible tolerances ± 10 %)
/ flow rate PowderRain spray at 3 bar: 6,6 l/min
/ function from: 4,4 l/min
/ maximum flow rate at 3 bar: 6,6 l/min
/ minimum flow pressure: 0,7 bar
/ projection: 122 mm
/ overhead shower angle adjustable
/ material spray disc: metal
/ overhead shower removable for cleaning
/ shower arm length: 90 mm
/ installation: wall, shower can be installed as a shoulder shower or overhead shower
/ connection thread: G ½
/ connection dimension: DN15
/ suitable for continous flow water heaters
/ EU taxonomy: max. 8 l/min – Do No Significant Harm (DNSH)

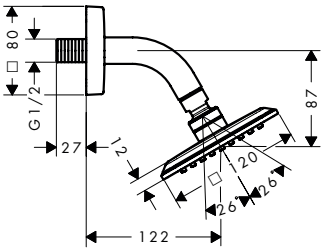

Special feature

EcoSmart

Technologies

Quick Clean

Spray types

Powder Rain

Shower head size	Number of sprays	Spray types	Function from (l/min)	Max. flow rate at 3 bar (l/min)	Min. flow pressure (bar)	Finish	Code no.
120/120	1	PowderRain	4.4	6.6	0.7	Chrome	28810000
						Brushed Bronze	28810140
						Brushed Black Chrome	28810340
						Brushed Nickel	28810820
						Polished Gold Optic	28810990
						AXOR FinishPlus*	28810XXX

This product is not available in the AXOR FinishPlus surface Matt Black.

Optional parts:		Finish	Code no.
	AXOR Citterio C Wall escutcheon 120/120 softsquare	Chrome	28801000
		AXOR FinishPlus*	28801XXX

Overhead showers 1jet with shower arm

Features of all variants

/ consists of: overhead shower, shower arm
/ shower head size: 270 x 270 mm
/ spray type: PowderRain
/ material spray disc: metal
/ overhead shower removable for cleaning
/ shower arm length: 390 mm
/ installation: wall
/ connection thread: G ½
/ suitable for continous flow water heaters

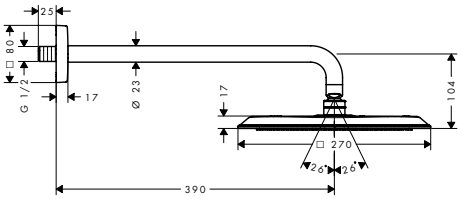

Special feature

EcoSmart

Technologies

Quick Clean

Spray types

Powder Rain

Measurements within scale drawings are in mm.
Technical specifications and units of measure are subject to change.

Overhead showers 1jet with shower arm

Overview variants

Shower head size	Number of sprays	Spray types	Function from (l/min)	Max. flow rate at 3 bar (l/min)	Min. flow pressure (bar)	Finish	Code no.
270/270	1	PowderRain	6	6.5	1.5	Chrome	28791000
						Brushed Bronze	28791140
						Brushed Black Chrome	28791340
						Matt Black	28791670
						Brushed Nickel	28791820
						Polished Gold Optic	28791990
						AXOR FinishPlus*	28791XXX
270/270	1	PowderRain	7.5	11	1	Chrome	28790000
						Brushed Bronze	28790140
						Brushed Black Chrome	28790340
						Matt Black	28790670
						Brushed Nickel	28790820
						Polished Gold Optic	28790990
						AXOR FinishPlus*	28790XXX

Optional parts:		Finish	Code no.
	AXOR Citterio C Wall escutcheon 120/120 softsquare	Chrome	28801000
		Matt Black	28801670
		AXOR FinishPlus*	28801XXX

Overhead showers 1jet with ceiling connector

Features of all variants

/ consists of: overhead shower, ceiling connector
/ shower head size: 270 x 270 mm
/ spray type: PowderRain
/ material spray disc: metal
/ overhead shower removable for cleaning
/ ceiling connection length: 100 mm
/ installation: ceiling mounting
/ connection thread: G ½
/ suitable for continous flow water heaters

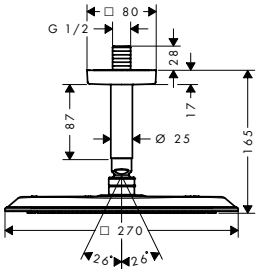

Special feature

EcoSmart

Technologies

Quick Clean

Spray types

Powder Rain

Overview variants

Shower head size	Number of sprays	Spray types	Function from (l/min)	Max. flow rate at 3 bar (l/min)	Min. flow pressure (bar)	Finish	Code no.
270/270	1	PowderRain	6	6.5	1.5	Chrome	28793000
						Brushed Bronze	28793140
						Brushed Black Chrome	28793340
						Matt Black	28793670
						Brushed Nickel	28793820
						Polished Gold Optic	28793990
						AXOR FinishPlus*	28793XXX

For more information about this product, please see the next page.

*AXOR FinishPlus: For further AXOR FinishPlus surfaces please see the AXOR FinishPlus overview on page 44.

Overhead showers 1jet with ceiling connector

Overview variants

Shower head size	Number of sprays	Spray types	Function from (l/min)	Max. flow rate at 3 bar (l/min)	Min. flow pressure (bar)	Finish	Code no.
270/270	1	PowderRain	7.5	11	1	Chrome	28792000
						Brushed Bronze	28792140
						Brushed Black Chrome	28792340
						Matt Black	28792670
						Brushed Nickel	28792820
						Polished Gold Optic	28792990
						AXOR FinishPlus*	28792XXX

Optional parts:		Finish	Code no.
	AXOR Citterio C Ceiling escutcheon 120/120 softsquare	Chrome	28802000
		Matt Black	28802670
		AXOR FinishPlus*	28802XXX

Overhead showers 1jet ceiling

Features of all variants

/ shower head size: 270 x 270 mm
/ spray type: Rain
/ material spray disc: metal
/ spray disc removable for cleaning
/ installation: ceiling mounting
/ connection type: basic set
/ suitable for continous flow water heaters

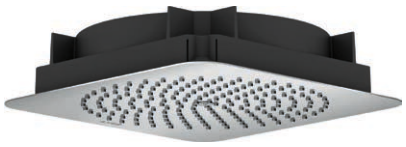

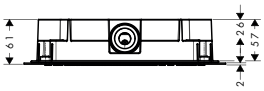

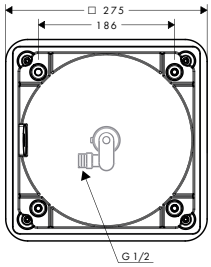

Special feature

Technologies

Spray types

Overview variants

Shower head size	Number of sprays	Spray types	Function from (l/min)	Max. flow rate at 3 bar (l/min)	Min. flow pressure (bar)	Finish	Code no.
270/270	1	Rain	4.3	6.8	1.2	Chrome	28795000
						Brushed Bronze	28795140
						Brushed Black Chrome	28795340
						Matt Black	28795670
						Brushed Nickel	28795820
						Polished Gold Optic	28795990
						AXOR FinishPlus*	28795XXX
270/270	1	Rain	4.1	11.3	1	Chrome	28794000
						Brushed Bronze	28794140
						Brushed Black Chrome	28794340
						Matt Black	28794670
						Brushed Nickel	28794820
						Polished Gold Optic	28794990
						AXOR FinishPlus*	28794XXX

Required parts:		Code no.
	AXOR Citterio C Basic set for overhead shower ceiling	26039180

Measurements within scale drawings are in mm.
Technical specifications and units of measure are subject to change.

Basic set for overhead shower ceiling

Features

/ minimum mounting depth: 60 mm / maximum mounting depth: 80 mm / connection dimension: G ½

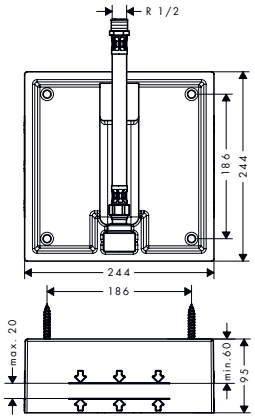

	Code no.
	26039180

Wall escutcheon 120/120 softsquare

Features

/ material: metal / wall-mounted

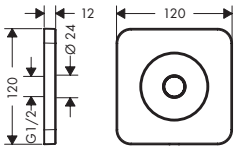

Finish	Code no.
Chrome	28801000
Matt Black	28801670
AXOR FinishPlus*	28801XXX

Optional parts:		Finish	Code no.
	AXOR Citterio C Overhead shower 270/270 1jet EcoSmart with shower arm	Chrome	28791000
		Matt Black	28791670
		AXOR FinishPlus*	28791XXX
	AXOR Citterio C Overhead shower 270/270 1jet with shower arm	Chrome	28790000
		Matt Black	28790670
		AXOR FinishPlus*	28790XXX
	AXOR Citterio C Overhead shower 120/120 1jet EcoSmart with shower arm	Chrome	28810000
		AXOR FinishPlus*	28810XXX

*AXOR FinishPlus: For further AXOR FinishPlus surfaces please see the AXOR FinishPlus overview on page 44.

Ceiling escutcheon 120/120 softsquare

Features

/ material: metal
/ ceiling installation

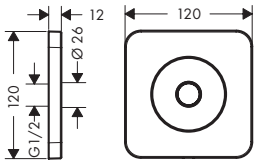

Finish	Code no.
Chrome	28802000
Matt Black	28802670
AXOR FinishPlus*	28802XXX

Optional parts:		Finish	Code no.
	AXOR Citterio C Overhead shower 270/270 1jet EcoSmart with ceiling connector	Chrome	28793000
		Matt Black	28793670
		AXOR FinishPlus*	28793XXX
	AXOR Citterio C Overhead shower 270/270 1jet with ceiling connector	Chrome	28792000
		Matt Black	28792670
		AXOR FinishPlus*	28792XXX

Porter unit 120/120 softsquare with baton hand shower 2jet and textile shower hose

Features of all variants

/ consists of: porter unit, baton hand shower, shower hose, shower holder
/ shower head size: 68 x 24 mm
/ spray type: Rain, MonoRain
/ QuickClean: Limescale deposits can simply be rubbed off with your finger
/ maximum flow rate at 3 bar: 8,7 l/min
/ minimum flow pressure: 1 bar
/ operating pressure: min. 1 bar/max. 10 bar
/ shower hose with cylindrical nut on both ends
/ shower hose length: 1600 mm
/ with non-return valve
/ integrated support function
/ wall mounting: screw fastening
/ rinseable filter washer

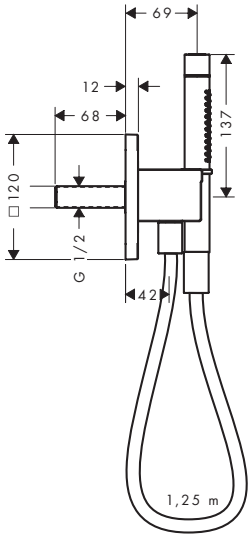

Technologies

Spray types

Number of sprays	Spray types	Function from (l/min)	Max. flow rate at 3 bar (l/min)	Min. flow pressure (bar)	Shower hose length (mm)	Finish	Code no.
2	Rain, MonoRain	5.6	8.7	1	1600	Chrome	49626000
						Brushed Bronze	49626140
						Brushed Black Chrome	49626340
						Matt Black	49626670
						Brushed Nickel	49626820
						Polished Gold Optic	49626990
						AXOR FinishPlus*	49626XXX

Measurements within scale drawings are in mm.
Technical specifications and units of measure are subject to change.

Shower controls/Thermostats

AXOR ShowerSelect ID
Thermostat for concealed installation softsquare for 2 functions

#36754XXX

page 88

AXOR Citterio M
Thermostat for concealed installation with shut-off/ diverter valve

#34725XXX

page 298

AXOR One
Thermostatic module for concealed installation for 2 functions

#45712XXX

page 123

Showers

AXOR Citterio E
Shower set 0.90 m with hand shower 120 3jet

#36735XXX

page 300

AXOR ShowerSolutions
Hand shower 130 3jet

#39772XXX

page 454

AXOR ShowerSphere
Overhead shower 370/220 2jet EcoSmart with adjustable shower arm

#39746XXX

page 417

Further complementary products

AXOR Universal Softsquare
Rail bath towel holder 600 mm

#42832XXX

page 569

AXOR FlushPlate
Flush plate for Geberit Sigma

#42530XXX

page 581

AXOR Bidette Showers
Bidette hand shower 1jet softsquare for cold water with shower holder and shower hose 1.25 m

#29241XXX

page 463

Basin

Bidet

Bath

Thermostatic module /
bath and shower mixer

Showerpipe

Shower sets

Overhead showers

Hand showers

Porter

Complementary products

AXOR ONE

DESIGN
–
BARBER OSGERBY

"AXOR One provokes the memory of water but heralds a new way of controlling it that is much more precise and incredibly refined."

EDWARD BARBER AND JAY OSGERBY

AXOR One

The essence of simplicity

A bathroom collection so elegant, elemental and pure, it could be realized only through radical innovation. Whether at the wash basin, bathtub or shower, familiar archetypes have been reinvented for greater clarity, enhanced function and superior control. Timeless by design, and available in Chrome and an array of exclusive AXOR FinishPlus surfaces, AXOR One brings exquisite beauty to any bathroom.

Design: Barber Osgerby

Characteristic design feature:

Minimalist design: A familiar archetype with innovative interaction.

The designer's idea:

Challenging the archetype through the pursuit of art and science, invention and interaction.

Special collection highlights:

/ Holistic design language of slender silhouettes, flat surfaces, soft corners and balanced proportions

/ Using Select technology: The mechanical faucet handles enable precise, water-saving on/off and temperature control

/ Great versatility through a choice of handle options: Select, lever, and cross handles

/ A collection of elegant archetypes for the wash basin, bathtub and shower

/ The action is effortless, intuitive and ultra-precise, and this same inventive design thinking characterizes the entire collection

→ Learn more about AXOR One: axor-design.com

The Essence of Simplicity with innovative Interaction

A collection of elegant archetypes for the wash basin, bathtub and shower, AXOR One is unified by a holistic design language of slender silhouettes, flat surfaces, soft corners and balanced proportions. The iconic mixers feature a gentle taper to their curved spouts, a subtle detail that signals exceptional quality of design and manufacturing. Utilizing Select technology, the mechanical mixer handles enable precise, water-saving on/off and temperate control. Positioning the cartridge underneath the wash basin makes the exceptionally slim silhouette possible. At the same time, it allows for fast installation as well as easy service and maintenance: The flexible horizontal hose arrangement simplifies installation and keeps the required space beneath the washbasin to a minimum.

Familiar Archetetype

With its archetypal round arch, the product looks familiar but is enhanced through innovation

Gentle tapered Spout

A subtle detail that signals both precision and exceptional quality of design and manufacturing

Minimalist Design

Reduced to the minimum, the product is simple in form and function

Select Technology with CoolStart function

The mechanical Select handle enables effortless, intuitive and ultra-precise control and includes a preset CoolStart function

Cartridge unit:

Minimal space needed beneath the wash basin

Flexible hose arrangement

Horizontal hose arrangement and integrated joint for easy and fast installation

On / Off:

Press down on its all-in-one controller—the Select handle—to start or stop the water.

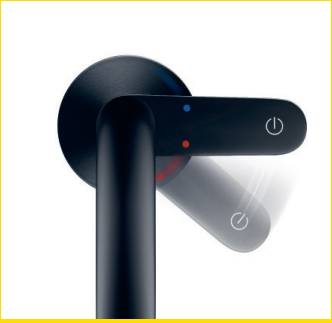

Temperature Control:

Swivel clockwise to increase the temperature. The handle includes a preset CoolStart function, an environmentally friendly technology that helps conserve resources.or stop the water.

The AXOR One collection is available in a variety of AXOR FinishPlus surfaces, making it the perfect choice for introducing color into the bathroom.

The minimalist design story continues with the wash basin mixers with lever handle. The M25XS cartridge allows for a flat handle design. The integrated aerator and the slightly tapered spout emphasizes the quality of design and manufacturing.

AXOR One offers three different handle options to suit individual preferences and interior design styles.

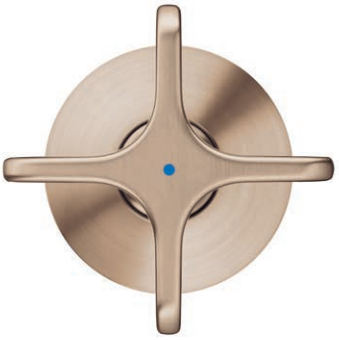

Newly introduced cross handles traverse the space between tradition and modernity, blending classic elegance with contemporary form.

The innovative Select handle enables intuitive interaction for an effortless user experience.

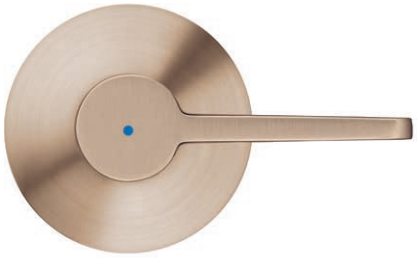

The minimalist lever handles enhance the sleek aesthetic in every corner of the bathroom

The showerpipe seamlessly integrates an overhead shower, hand shower, thermostat, and wall bar into a single product. The valve for the overhead shower is conveniently positioned on the vertical pipe, while the valve for the hand shower is located at the hose connection. This arrangement ensures easy operation and allows both outlets to be used simultaneously.

The AXOR One thermostat module combines all functions in a single control element for intuitive control of all consumers. Based on the user-friendly Select technology, operated by pressing instead of turning. The Select paddles have mechanical controls, offering high precision.

Temperature regulation:

/ Precisely controllable with the large, cylindrical knob

/ Safety lock limits temperature to 40°C

/ Adjustable maximum temperature

Operation:

/ Large symbols on the paddles indicate clearly which outlet is being used

/ The paddle icons can be applied easily after installation

Outlet Control:

/ Large Select paddles turn the water on and off easily

/ Complete control with finger, hand or even elbow operation

/ Up to three functions can be activated—separately or at the same time

/ A porter can be added

Volume Control

/ For economical water consumption

/ Volume control reduces water flow continuously by up to 50%—depending on flow volume and installation configuration

The floor-standing bathtub faucet catches the eye with a sleek, arche-typal form, distinguished by a high parabolic spout. Accompanied by the hand shower 75 1jet, the faucet balances a adically reduced aesthetic with exceptional functionality. A diverter elegantly integrated into the spout allows for easy switching of water flow to the hand shower.

The three-hole wall-mounted bath mixer is available with or without a hand shower, and can be fitted with either lever or cross handles, offering versatility and enabling individual expression in both form and function.

Basin mixers Select

Features of all variants

/ consists of: basin mixer, waste set
/ handle variant: Select
/ spray type: normal spray
/ maximum flow rate at 3 bar: 5 l/min
/ Select cartridge with temperature control
/ Select push-button on/off control
/ temperature limitation adjustable
/ suitable for continuous flow water heaters
/ push-open waste set G 1¼
/ material waste set: metal
/ connection type: G ⅜ hose connections
/ connection dimension: DN15
/ cold water in basic handle position
/ EU taxonomy: max. 6 l/min – Substantial Contribution (SC) possible

140

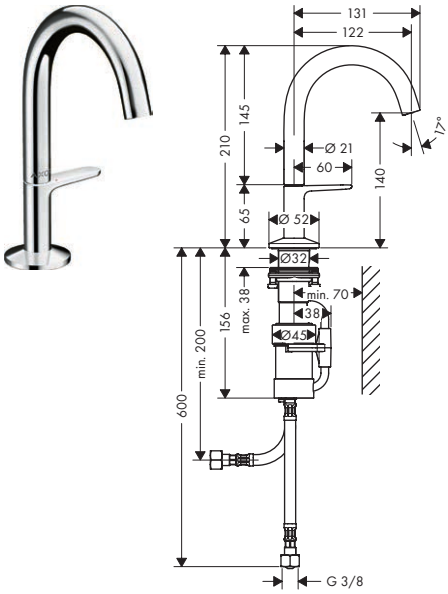

170

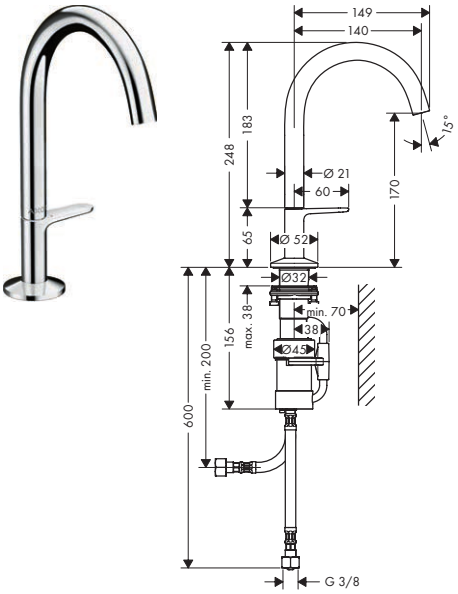

260

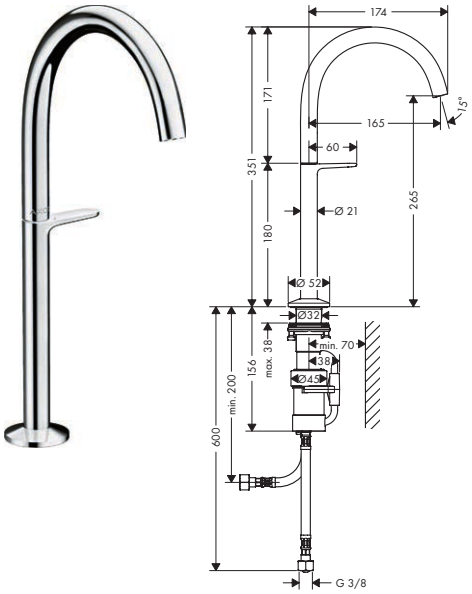

Special feature

Technologies

Overview variants

ComfortZone	Projection (mm)	Spout height (mm)	For wash bowls	Finish	Code no.
140	122	140	–	Chrome	48010000
				Brushed Bronze	48010140
				Brushed Black Chrome	48010340
				Matt Black	48010670
				Matt White	48010700
				Brushed Brass	48010950
				Polished Gold Optic	48010990
				AXOR FinishPlus*	48010XXX
170	140	170	–	Chrome	48020000
				Brushed Bronze	48020140
				Brushed Black Chrome	48020340
				Matt Black	48020670
				Matt White	48020700
				Brushed Brass	48020950
				Polished Gold Optic	48020990
				AXOR FinishPlus*	48020XXX
260	165	265	■	Chrome	48030000
				Brushed Bronze	48030140
				Brushed Black Chrome	48030340
				Matt Black	48030670
				Matt White	48030700
				Brushed Brass	48030950
				Polished Gold Optic	48030990
				AXOR FinishPlus*	48030XXX

Measurements within scale drawings are in mm.
Technical specifications and units of measure are subject to change.

2-hole basin mixer Select 260 with push-open waste set

Features of all variants

/ consists of: 2-hole basin mixer, waste set
/ ComfortZone: 260
/ projection: 165 mm
/ spout height: 267 mm
/ handle variant: Select
/ swivel range 120°
/ spray type: normal spray
/ maximum flow rate at 3 bar: 5 l/min
/ Select cartridge with temperature control
/ Select push-button on/off control
/ temperature limitation adjustable
/ suitable for continuous flow water heaters
/ push-open waste set G 1¼
/ material waste set: metal
/ connection type: G ⅜ hose connections
/ flexible arrangement of control unit and spout possible
/ the control unit needs approx. 20 cm space underneath the top
/ EU taxonomy: max. 6 l/min – Substantial Contribution (SC) possible

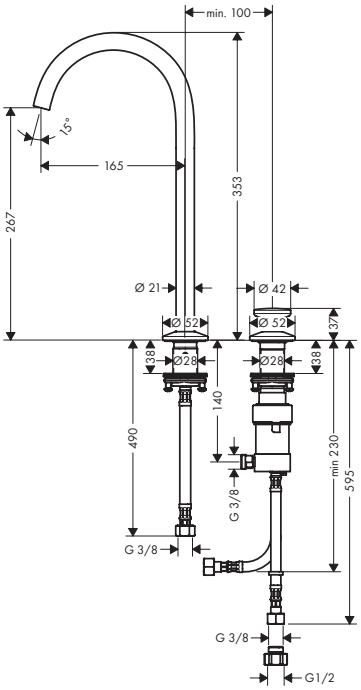

Special feature

EcoSmart

Technologies

AirPower | Comfort Zone | Select

ComfortZone	Projection (mm)	Spout height (mm)	Waste set	Finish	Code no.
260	165	267	push-open	Chrome	48060000
				Brushed Bronze	48060140
				Brushed Black Chrome	48060340
				Matt Black	48060670
				Matt White	48060700
				Brushed Brass	48060950
				Polished Gold Optic	48060990
				AXOR FinishPlus*	48060XXX

Optional parts:	Code no.
Hose extension set for 2-hole basin mixer	38960000

*AXOR FinishPlus: For further AXOR FinishPlus surfaces please see the AXOR FinishPlus overview on page 44.

3-hole basin mixer Select 170 with push-open waste set

Features of all variants

/ consists of: 3-hole basin mixer, waste set
/ ComfortZone: 170
/ projection: 140 mm
/ spout height: 169 mm
/ handle variant: Select
/ spray type: normal spray
/ maximum flow rate at 3 bar: 5 l/min
/ right handle: Select cartridge with temperature control
/ left handle: volume control
/ temperature limitation adjustable
/ suitable for continuous flow water heaters
/ push-open waste set G 1¼
/ material waste set: metal
/ connection type: G ⅜ hose connections
/ connection dimension: DN15
/ EU taxonomy: max. 6 l/min – Substantial Contribution (SC) possible

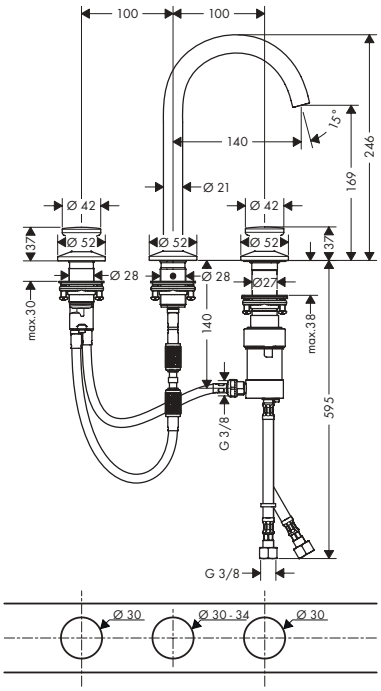

Special feature

EcoSmart

Technologies

AirPower | Comfort Zone | Select

ComfortZone	Projection (mm)	Spout height (mm)	Spray types	Waste set	Finish	Code no.
170	140	169	normal spray	push-open	Chrome	48070000
					Brushed Bronze	48070140
					Brushed Black Chrome	48070340
					Matt Black	48070670
					Matt White	48070700
					Brushed Brass	48070950
					Polished Gold Optic	48070990
					AXOR FinishPlus*	48070XXX

Optional parts:		Code no.
	Hose extension set for 3-hole basin mixer	38959000

Measurements within scale drawings are in mm.
Technical specifications and units of measure are subject to change.

3-hole basin mixers

Features of all variants

/ consists of: 3-hole basin mixer, waste set
/ ComfortZone: 170
/ projection: 140 mm
/ spout height: 169 mm
/ swivel range 120°
/ spray type: normal spray
/ maximum flow rate at 3 bar: 5 l/min
/ ceramic valves hot/cold 90°
/ suitable for continuous flow water heaters
/ push-open waste set G 1¼
/ material waste set: metal
/ connection type: G ⅜ hose connections
/ connection dimension: DN15
/ EU taxonomy: max. 6 l/min – Substantial Contribution (SC) possible

with lever handles

with cross handles

Special feature

EcoSmart

Technologies

AirPower | Comfort Zone

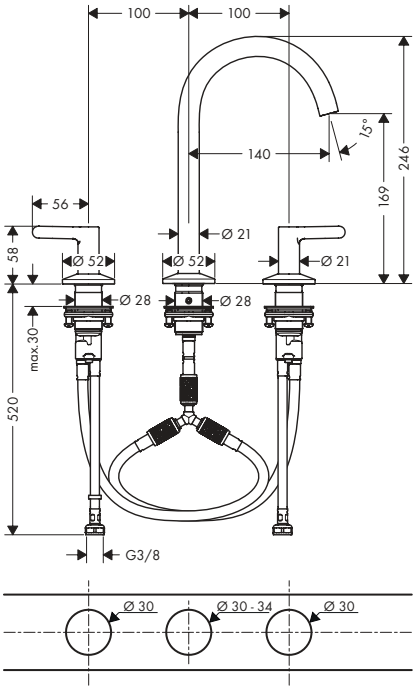

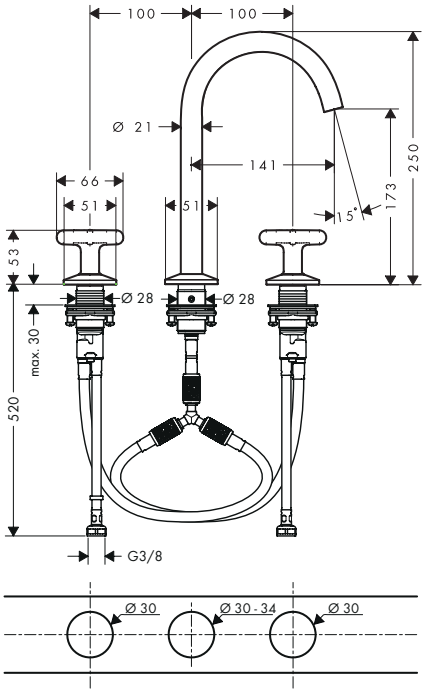

Overview variants

ComfortZone	Projection (mm)	Spout height (mm)	Waste set	Handle version	Finish	Code no.
170	140	169	push-open	lever	Chrome	48050000
					Brushed Bronze	48050140
					Brushed Black Chrome	48050340
					Matt Black	48050670
					Matt White	48050700
					Brushed Brass	48050950
					Polished Gold Optic	48050990
					AXOR FinishPlus*	48050XXX

For more information about this product, please see the next page.

*AXOR FinishPlus: For further AXOR FinishPlus surfaces please see the AXOR FinishPlus overview on page 44.

3-hole basin mixers

Overview variants

ComfortZone	Projection (mm)	Spout height (mm)	Waste set	Handle version	Finish	Code no.
170	140	169	push-open	cross	Chrome	48040000
					Brushed Bronze	48040140
					Brushed Black Chrome	48040340
					Matt Black	48040670
					Brushed Brass	48040950
					Polished Gold Optic	48040990
					AXOR FinishPlus*	48040XXX

Optional parts:		Code no.
	Hose extension set for 3-hole basin mixer	38959000

3-hole basin mixers for concealed installation wall-mounted with escutcheons

Features of all variants

/ consists of: 3-hole basin mixer for concealed installation wall-mounted, waste set
/ spray type: normal spray
/ maximum flow rate at 3 bar: 5 l/min
/ ceramic valves hot/cold 90°
/ suitable for continuous flow water heaters
/ non-closing waste set
/ connection type: basic set
/ connection dimension: DN15

with lever handles

with cross handles

Special feature

EcoSmart

Technologies

Quick Clean, AirPower

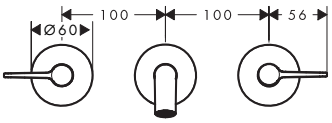

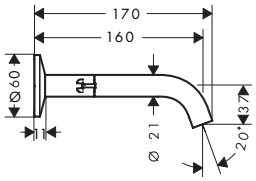

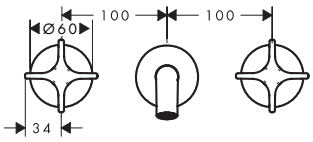

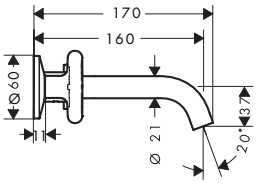

Overview variants

Projection (mm)	Handle version	Finish	Code no.
160	lever	Chrome	48150000
		Brushed Bronze	48150140
		Brushed Black Chrome	48150340
		Brushed Brass	48150950
		Polished Gold Optic	48150990
		AXOR FinishPlus*	48150XXX
220	lever	Chrome	48160000
		Brushed Bronze	48160140
		Brushed Black Chrome	48160340
		Matt Black	48160670
		Brushed Brass	48160950
		Polished Gold Optic	48160990
		AXOR FinishPlus*	48160XXX

Measurements within scale drawings are in mm.
Technical specifications and units of measure are subject to change.

3-hole basin mixers for concealed installation wall-mounted with escutcheons

Overview variants

Projection (mm)	Handle version	Finish	Code no.
160	cross	Chrome	48130000
		Brushed Bronze	48130140
		Brushed Black Chrome	48130340
		Brushed Brass	48130950
		Polished Gold Optic	48130990
		AXOR FinishPlus*	48130XXX
220	cross	Chrome	48140000
		Brushed Bronze	48140140
		Brushed Black Chrome	48140340
		Matt Black	48140670
		Brushed Brass	48140950
		Polished Gold Optic	48140990
		AXOR FinishPlus*	48140XXX

Required parts:		Code no.
	Basic set for 3-hole basin mixer for concealed installation wall-mounted	10303180

Optional parts:		Code no.
	Seal	96383000
	AXOR Starck Extension set 25 mm for basic set for 3-hole basin mixer wall-mounted	96259000

Basin mixers for concealed installation wall-mounted Select

Features of all variants

/ consists of: basin mixer for concealed installation wall-mounted, waste set
/ handle variant: Select
/ spray type: normal spray
/ maximum flow rate at 3 bar: 5 l/min
/ Select cartridge with temperature control
/ Select push-button on/off control
/ suitable for continuous flow water heaters
/ non-closing waste set
/ connection type: basic set
/ connection dimension: DN15
/ EU taxonomy: max. 6 l/min – Substantial Contribution (SC) possible

160

220

Special feature

EcoSmart

Technologies

AirPower Select

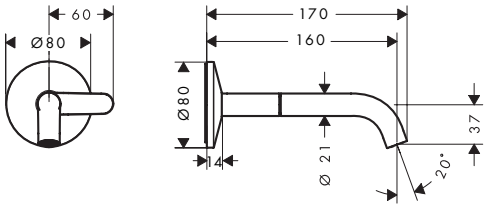

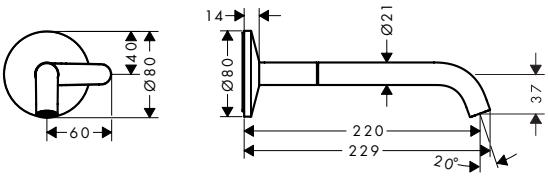

For more information about this product, please see the next page.

*AXOR FinishPlus: For further AXOR FinishPlus surfaces please see the AXOR FinishPlus overview on page 44.

Basin mixers for concealed installation wall-mounted Select

Overview variants

Projection (mm)	Finish	Code no.
160	Chrome	48180000
	Brushed Bronze	48180140
	Brushed Black Chrome	48180340
	Brushed Brass	48180950
	Polished Gold Optic	48180990
	AXOR FinishPlus*	48180XXX
220	Chrome	48112000
	Brushed Bronze	48112140
	Brushed Black Chrome	48112340
	Matt Black	48112670
	Matt White	48112700
	Brushed Brass	48112950
	Polished Gold Optic	48112990
	AXOR FinishPlus*	48112XXX

Required parts:		Code no.
	Basic set for basin mixer for concealed installation wall-mounted Select	13625180

Optional parts:		For	Finish	Code no.
	AXOR One Extension element	48180XXX	Chrome	13610000
			AXOR FinishPlus*	13610XXX
	AXOR One Escutcheon 90 mm	48180XXX	Chrome	13611000
			AXOR FinishPlus*	13611XXX

Single lever basin mixers

Features of all variants

/ consists of: single lever basin mixer, waste set
/ handle variant: lever handle
/ spray type: normal spray
/ maximum flow rate at 3 bar: 5 l/min
/ ceramic cartridge
/ temperature limitation adjustable
/ suitable for continuous flow water heaters
/ material waste set: metal
/ connection type: G ⅜ hose connections
/ connection dimension: DN15
/ EU taxonomy: max. 6 l/min – Substantial Contribution (SC) possible

70

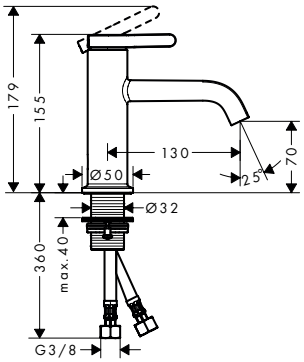

260

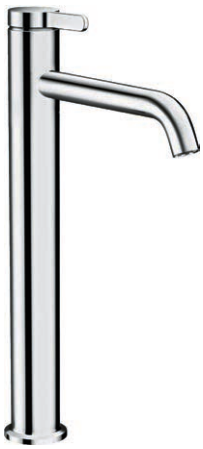

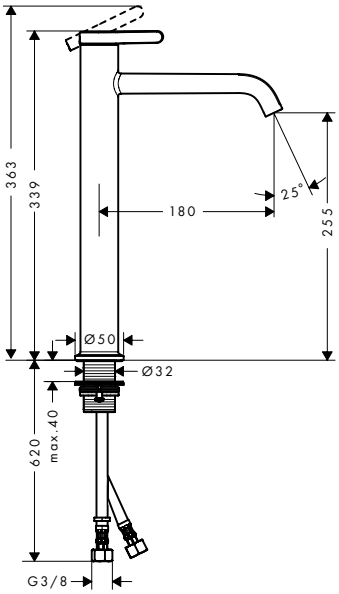

Special feature

EcoSmart

Technologies

AirPower

Comfort Zone

Measurements within scale drawings are in mm.
Technical specifications and units of measure are subject to change.

Single lever basin mixers

Overview variants

ComfortZone	Projection (mm)	Spout height (mm)	Waste set	For wash bowls	Finish	Code no.
70	130	70	pop-up	–	Chrome	48000000
					Brushed Bronze	48000140
					Brushed Black Chrome	48000340
					Matt Black	48000670
					Matt White	48000700
					Brushed Brass	48000950
					Polished Gold Optic	48000990
					AXOR FinishPlus*	48000XXX
70	130	70	non-closing	–	Chrome	48001000
					Brushed Bronze	48001140
					Brushed Black Chrome	48001340
					Matt Black	48001670
					Matt White	48001700
					Stainless Steel Optic	48001800
					Brushed Brass	48001950
					Polished Gold Optic	48001990
					AXOR FinishPlus*	48001XXX
260	180	255	non-closing	■	Chrome	48002000
					Brushed Bronze	48002140
					Brushed Black Chrome	48002340
					Matt Black	48002670
					Matt White	48002700
					Brushed Brass	48002950
					Polished Gold Optic	48002990
					AXOR FinishPlus*	48002XXX

Single lever basin mixers for concealed installation wall-mounted

Features of all variants

/ consists of: single lever basin mixer for concealed installation wall-mounted, waste set
/ handle variant: lever handle
/ spray type: normal spray
/ maximum flow rate at 3 bar: 5 l/min
/ ceramic cartridge
/ temperature limitation adjustable
/ suitable for continuous flow water heaters
/ non-closing waste set
/ connection type: basic set
/ connection dimension: DN15
/ handle can be positioned on the right or left, depending on the basic set installation
/ EU taxonomy: max. 6 l/min – Substantial Contribution (SC) possible

160

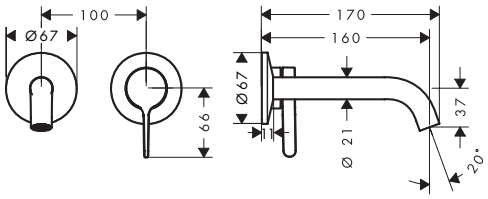

220

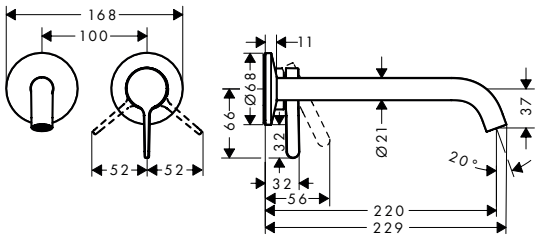

Special feature

EcoSmart

Technologies

AirPower

For more information about this product, please see the next page.

*AXOR FinishPlus: For further AXOR FinishPlus surfaces please see the AXOR FinishPlus overview on page 44.

Single lever basin mixers for concealed installation wall-mounted

Overview variants

Projection (mm)	Finish	Code no.
160	Chrome	48170000
	Brushed Bronze	48170140
	Brushed Black Chrome	48170340
	Brushed Brass	48170950
	Polished Gold Optic	48170990
	AXOR FinishPlus*	48170XXX
220	Chrome	48120000
	Brushed Bronze	48120140
	Brushed Black Chrome	48120340
	Matt Black	48120670
	Matt White	48120700
	Brushed Brass	48120950
	Polished Gold Optic	48120990
	AXOR FinishPlus*	48120XXX

Required parts:	Code no.
Basic set for single lever basin mixer for concealed installation wall-mounted	13623180

Single lever bidet mixer with pop-up waste set

Features of all variants

/ consists of: single lever bidet mixer, waste set
/ projection: 113 mm
/ spout height: 100 mm
/ aerator with ball pivot
/ spray type: normal spray
/ maximum flow rate at 3 bar: 5 l/min
/ ceramic cartridge
/ temperature limitation adjustable
/ suitable for continous flow water heaters
/ pop-up waste set G 1¼
/ material waste set: metal
/ connection type: G ⅜ hose connections
/ connection dimension: DN15
/ EU taxonomy: max. 6 l/min – Substantial Contribution (SC) possible

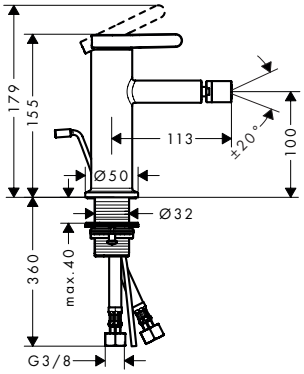

Special feature

EcoSmart

Technologies

AirPower

Projection (mm)	Spout height (mm)	Finish	Code no.
113	100	Chrome	48210000
		Brushed Bronze	48210140
		Brushed Black Chrome	48210340
		Matt Black	48210670
		Matt White	48210700
		Brushed Brass	48210950
		Polished Gold Optic	48210990
		AXOR FinishPlus*	48210XXX

Measurements within scale drawings are in mm.
Technical specifications and units of measure are subject to change.

Single lever bath mixer floor-standing

Features of all variants

/ consists of: single lever bath mixer floor standing, hand shower, shower hose, shower holder
/ 2 functions
/ projection: 220 mm
/ spray type mixer: normal spray
/ spray type hand shower: PowderRain
/ maximum flow rate at 3 bar: 21,5 l/min
/ flow rate for bath spout at 3 bar: 21,5 l/min
/ flow rate of hand shower at 3 bar: 8 l/min
/ ceramic cartridge
/ temperature limitation adjustable
/ diverter with automatic resetting
/ non-return valve
/ connection dimension: DN15
/ connection type: basic set
/ deck mounted
/ min. operating pressure: 1 bar
/ max. operating pressure: 10 bar

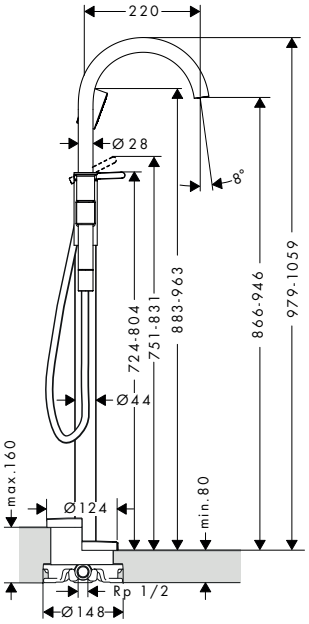

Technologies

AirPower

Spray types

Powder Rain

Projection (mm)	Finish	Code no.
220	Chrome	48440000
	Brushed Bronze	48440140
	Brushed Black Chrome	48440340
	Matt Black	48440670
	Matt White	48440700
	Brushed Brass	48440950
	Polished Gold Optic	48440990
	AXOR FinishPlus*	48440XXX

Required parts:		Code no.
	Basic set for mixers floor-standing	10452180

Optional parts:		Code no.
	Sealing foil for basic set bath mixer floor-standing	96441000
	AXOR Starck Extension 60 mm for pipe	97686000

*AXOR FinishPlus: For further AXOR FinishPlus surfaces please see the AXOR FinishPlus overview on page 44.

3-hole bath mixers for concealed installation for wall mounting

Features of all variants

/ consists of: 3-hole bath mixer, hand shower, shower holder, shower hose
/ 2 functions
/ projection: 220 mm
/ spray type mixer: normal spray
/ spray type hand shower: PowderRain
/ ceramic valves hot/cold 90°
/ diverter with automatic resetting
/ non-return valve
/ connection dimension: DN15
/ connection type: basic set
/ wall-mounted
/ min. operating pressure: 1 bar
/ max. operating pressure: 10 bar

with lever handles

with cross handles

Technologies

Spray types

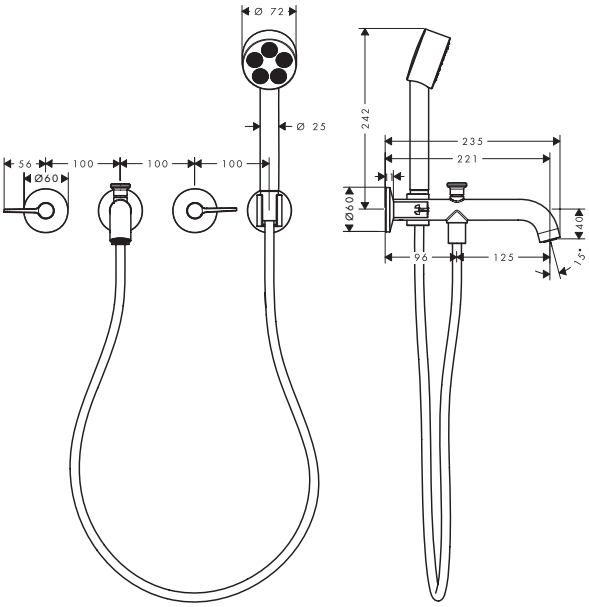

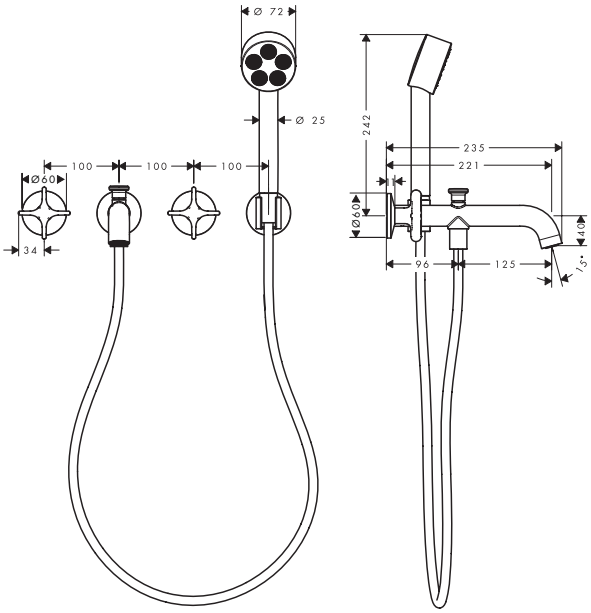

Overview variants

Projection (mm)	Handle version	Finish	Code no.
220	lever	Chrome	48444000
		Brushed Bronze	48444140
		Brushed Black Chrome	48444340
		Brushed Brass	48444950
		Polished Gold Optic	48444990
		AXOR FinishPlus*	48444XXX
220	cross	Chrome	48443000
		Brushed Bronze	48443140
		Brushed Black Chrome	48443340
		Brushed Brass	48443950
		Polished Gold Optic	48443990
		AXOR FinishPlus*	48443XXX

Measurements within scale drawings are in mm.
Technical specifications and units of measure are subject to change.

3-hole bath mixers for concealed installation for wall mounting

Required parts:		Code no.
	Basic set for 3-hole basin mixer for concealed installation wall-mounted	10303180

Optional parts:		Code no.
	Seal	96383000
	AXOR Starck Extension set 25 mm for basic set for 3-hole basin mixer wall-mounted	96259000

3-hole bath mixers for concealed installation for wall mounting

Features of all variants

/ 1 function
/ projection: 220 mm
/ spray type mixer: normal spray
/ ceramic valves hot/cold 90°
/ maximum flow rate at 3 bar: 20,5 l/min
/ connection dimension: DN15
/ connection type: basic set
/ wall-mounted
/ min. operating pressure: 1 bar
/ max. operating pressure: 10 bar

with lever handles

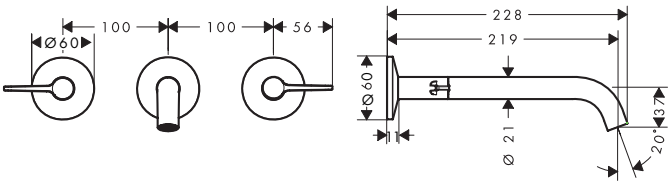

with cross handles

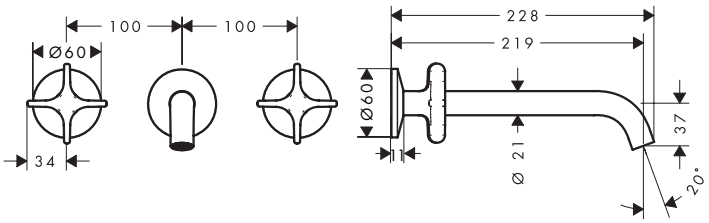

Technologies

AirPower

Overview variants

Projection (mm)	Handle version	Finish	Code no.
220	lever	Chrome	48431000
		Brushed Bronze	48431140
		Brushed Black Chrome	48431340
		Matt Black	48431670
		Brushed Brass	48431950
		Polished Gold Optic	48431990
		AXOR FinishPlus*	48431XXX
220	cross	Chrome	48430000
		Brushed Bronze	48430140
		Brushed Black Chrome	48430340
		Matt Black	48430670
		Brushed Brass	48430950
		Polished Gold Optic	48430990
		AXOR FinishPlus*	48430XXX

Required parts:		Code no.
	Basic set for 3-hole basin mixer for concealed installation wall-mounted	10303180

Optional parts:		Code no.
	Seal	96383000

For more information about this product, please see the next page.

*AXOR FinishPlus: For further AXOR FinishPlus surfaces please see the AXOR FinishPlus overview on page 44.

3-hole bath mixers for concealed installation for wall mounting

Optional parts:		Code no.
	AXOR Starck Extension set 25 mm for basic set for 3-hole basin mixer wall-mounted	96259000

2-hole rim mounted thermostatic bath mixer

Features of all variants

/ 2 functions
/ Safety stop at 40 °C
/ temperature limitation adjustable
/ suitable for remote spout
/ connection dimension: DN15
/ connection type: basic set
/ rim mounted

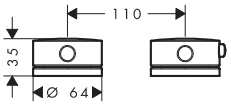

Special feature

Technologies

	Number of functions	Finish	Code no.
	2 functions	Chrome	48470000
		Brushed Bronze	48470140
		Brushed Black Chrome	48470340
		Brushed Brass	48470950
		Polished Gold Optic	48470990
		AXOR FinishPlus*	48470XXX

Required parts:		Code no.
	Basic set for 2-hole rim mounted thermostatic bath mixer	15486180

Optional parts:		Code no.
	Connection tube set for 2-hole rim mounted thermostatic bath mixer	13089000
	Flexible connection tube 800 mm	58308000

Measurements within scale drawings are in mm.
Technical specifications and units of measure are subject to change.

Thermostatic modules for concealed installation

Features of all variants

/ comfortable turning on / off of outlets with large Select-paddle
/ Eco-Function: flow rate regulation via lever handle, depending on volume flow and installation situation approx. 50% flow rate reduction
/ thermostat cartridge, Start/stop valve to operate the functions
/ flow rate per outlet: 24 l/min
/ min. operating pressure: 1 bar
/ max. operating pressure: 5 bar
/ Safety stop at 40 °C
/ temperature limitation adjustable
/ the thermostat offers the possibility for thermal disinfection
/ non-return valve
/ connection type: basic set

1 function

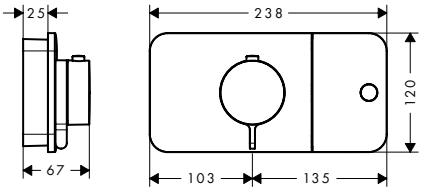

2 functions

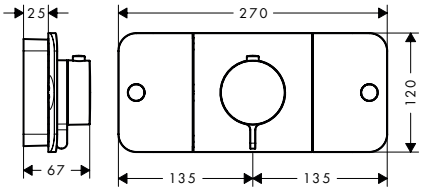

3 functions

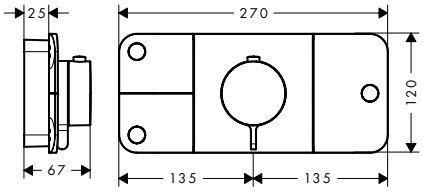

Special feature

Technologies

Certificates/declarations

Overview variants

Number of functions	Max. flow rate at 3 bar (l/min)	Flow rate per user	Finish	Code no.
1 function	24	24	Chrome	45711000
			Brushed Bronze	45711140
			Brushed Black Chrome	45711340
			Matt Black	45711670
			Matt White	45711700
			Brushed Brass	45711950
			Polished Gold Optic	45711990
			AXOR FinishPlus*	45711XXX
2 functions	30	24	Chrome	45712000
			Brushed Bronze	45712140
			Brushed Black Chrome	45712340
			Matt Black	45712670
			Matt White	45712700
			Brushed Brass	45712950
			Polished Gold Optic	45712990
			AXOR FinishPlus*	45712XXX
3 functions	30	24	Chrome	45713000
			Brushed Bronze	45713140
			Brushed Black Chrome	45713340
			Matt Black	45713670
			Matt White	45713700
			Brushed Brass	45713950
			Polished Gold Optic	45713990
			AXOR FinishPlus*	45713XXX

For more information about this product, please see the next page.

*AXOR FinishPlus: For further AXOR FinishPlus surfaces please see the AXOR FinishPlus overview on page 44.

Thermostatic modules for concealed installation

Required parts:		Code no.
	AXOR One Basic set for thermostatic module for concealed installation	45710180

Optional parts:		Finish	Code no.
	AXOR One Extension set 25 mm for basic set thermostatic module		45790000
		AXOR FinishPlus*	45790XXX

Shut-off valve for concealed installation

Features of all variants

/ comfortable turning on / off of outlets with large Select-paddle
/ connection type: basic set
/ 1 function
/ connection dimension: DN15
/ material: metal

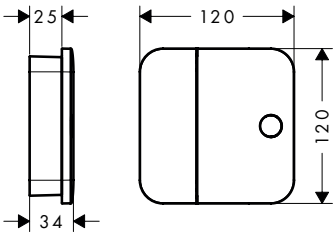

Technologies

Product dimensions (mm)	Finish	Code no.
120/120	Chrome	45771000
	Brushed Bronze	45771140
	Brushed Black Chrome	45771340
	Matt Black	45771670
	Matt White	45771700
	Brushed Brass	45771950
	Polished Gold Optic	45771990
	AXOR FinishPlus*	45771XXX

Required parts:		Code no.
	AXOR One Basic set for shut-off valve for concealed installation	45770180

Measurements within scale drawings are in mm.
Technical specifications and units of measure are subject to change.

Thermostatic modules for concealed installation

Features of all variants

/ consists of: thermostat, shut-off valve
/ 2 functions
/ simultaneous utilization of 2 functions
/ thermostat cartridge
/ suitable for horizontal and vertical installation
/ Safety stop at 40 °C
/ temperature limitation adjustable
/ connection dimension: DN20
/ connection type: basic set

with lever handles

with cross handles

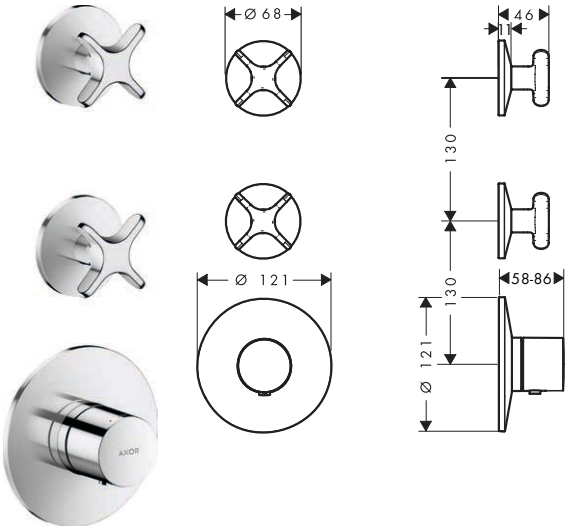

Special feature

Technologies

Overview variants

Handle version	Finish	Code no.
lever	Chrome	48722000
	Brushed Bronze	48722140
	Brushed Black Chrome	48722340
	Matt Black	48722670
	Brushed Brass	48722950
	Polished Gold Optic	48722990
	AXOR FinishPlus*	48722XXX
cross	Chrome	48712000
	Brushed Bronze	48712140
	Brushed Black Chrome	48712340
	Matt Black	48712670
	Brushed Brass	48712950
	Polished Gold Optic	48712990
	AXOR FinishPlus*	48712XXX

Required parts:	Code no.
AXOR One Basic set for thermostatic module for concealed installation for 2 functions	48720180

*AXOR FinishPlus: For further AXOR FinishPlus surfaces please see the AXOR FinishPlus overview on page 44.

Thermostatic modules for concealed installation

Features of all variants

/ consists of: thermostat, shut-off valve
/ 3 functions
/ simultaneous utilization of 3 functions
/ thermostat cartridge
/ maximum flow rate at 3 bar: 30.5 l/min
/ min. operating pressure: 1 bar
/ max. operating pressure: 10 bar
/ flow rate left and right: 37,9 l/min
/ suitable for horizontal and vertical installation
/ Safety stop at 40 °C
/ temperature limitation adjustable
/ connection dimension: DN20
/ connection type: basic set

with lever handles

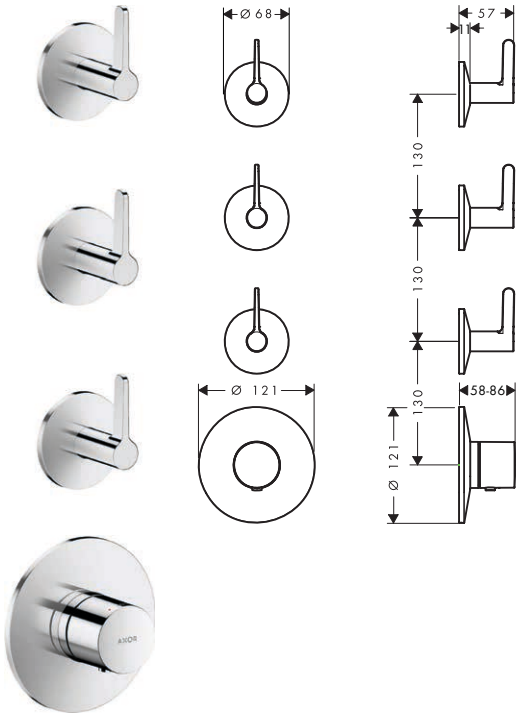

with cross handles

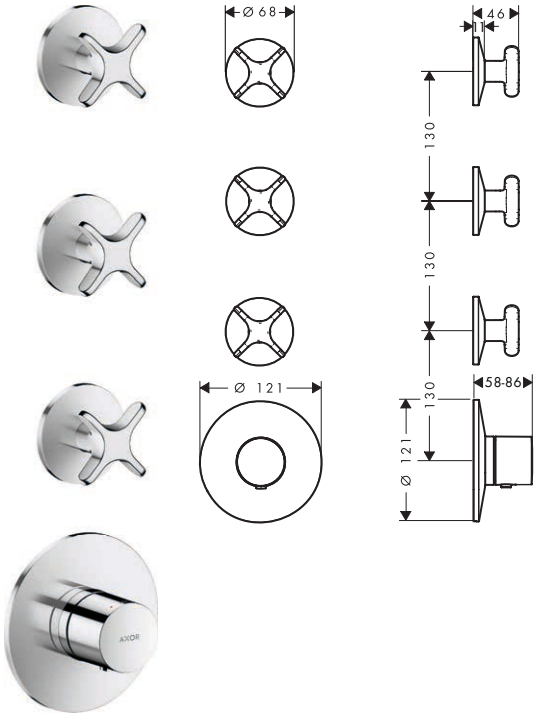

Special feature

Technologies

Overview variants

	Handle version	Finish	Code no.
	lever	Chrome	48723000
		Brushed Bronze	48723140
		Brushed Black Chrome	48723340
		Matt Black	48723670
		Brushed Brass	48723950
		Polished Gold Optic	48723990
		AXOR FinishPlus*	48723XXX
	cross	Chrome	48713000
		Brushed Bronze	48713140
		Brushed Black Chrome	48713340
		Matt Black	48713670
		Brushed Brass	48713950
		Polished Gold Optic	48713990
		AXOR FinishPlus*	48713XXX

Required parts:		Code no.
	AXOR One Basic set for thermostatic module for concealed installation for 3 functions	48710180

Measurements within scale drawings are in mm.
Technical specifications and units of measure are subject to change.

Thermostat for concealed installation

Features of all variants

/ 1 function
/ thermostat cartridge
/ min. operating pressure: 1,5 bar
/ max. operating pressure: 10 bar
/ Safety stop at 40 °C
/ temperature limitation adjustable
/ non-return valve
/ connection dimension: DN20
/ connection type: basic set

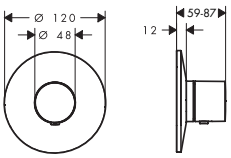

Technologies

Finish	Code no.
Chrome	48711000
Brushed Bronze	48711140
Brushed Black Chrome	48711340
Matt Black	48711670
Brushed Brass	48711950
Polished Gold Optic	48711990
AXOR FinishPlus*	48711XXX

Required parts:		Code no.
	AXOR ShowerSolutions Basic set for thermostatic module 120/120 for concealed installation	10754180

Optional parts:		Finish	Code no.
	AXOR ShowerSolutions Extension set 25 mm for thermostatic module	Chrome	10790000
		AXOR FinishPlus*	10790XXX

Shut-off valves for concealed installation

Features of all variants

/ volume control for 1 function
/ connection type: basic set
/ in a freely arranged installation, basic sets no.16973180, no.16974180 or no.16970180 can also be used
/ in a joined installation (10 mm distance) with no. 48722000, no. 48723000 or no. 48712000, no. 48713000, the basic set no. 10971180 must be used
/ in a joined installation (10 mm distance) with no. 48711000, the basic sets no. 10754180 and no. 10971180 must be used
/ 1 function
/ connection dimension: DN15/DN20
/ material: metal

lever handle

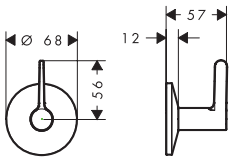

cross handle

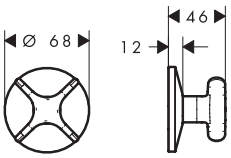

For more information about this product, please see the next page.

*AXOR FinishPlus: For further AXOR FinishPlus surfaces please see the AXOR FinishPlus overview on page 44.

Shut-off valves for concealed installation

Overview variants

Handle version	Finish	Code no.
lever	Chrome	48772000
	Brushed Bronze	48772140
	Brushed Black Chrome	48772340
	Matt Black	48772670
	Brushed Brass	48772950
	Polished Gold Optic	48772990
	AXOR FinishPlus*	48772XXX
cross	Chrome	48771000
	Brushed Bronze	48771140
	Brushed Black Chrome	48771340
	Matt Black	48771670
	Brushed Brass	48771950
	Polished Gold Optic	48771990
	AXOR FinishPlus*	48771XXX

Required parts (choose one):		Code no.
	AXOR ShowerSolutions Basic set for shut-off valve 120/120 for concealed installation	10971180
	Basic set 52 l/min for shut-off valve for concealed installation spindle	16973180
	Basic set 40 l/min for shut-off valve for concealed installation ceramic	16974180
	Basic set 130 l/min for shut-off valve for concealed installation spindle	16970180

Optional parts:		Code no.
	Extension set 25 mm for shut-off/ diverter valve Trio-/ Quattro	92990000

Basic sets for thermostatic module

Features of all variants

/ connection from left or right
/ connection dimension: DN15
/ sound-decoupled installation
/ suitable for horizontal and vertical installation

2 functions

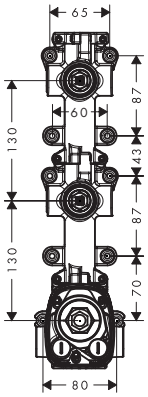

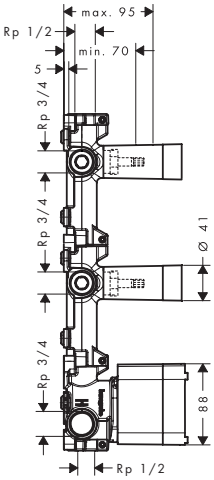

3 functions

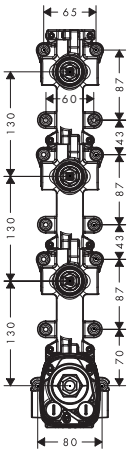

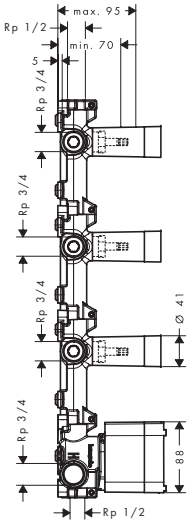

Measurements within scale drawings are in mm.
Technical specifications and units of measure are subject to change.

Basic sets for thermostatic module

Overview variants

Number of functions	Code no.
2 functions	48720180
3 functions	48710180

Mixers for concealed installation

Features of all variants

/ temperature limitation adjustable
/ with silencer
/ flat escutcheon for more space in the shower
/ can be used as bath or shower mixer
/ easy installation due to pre-assembled function block
/ handles always at the same height regardless of the installation depth of the basic set
/ escutcheon can be aligned by +/- 3°
/ material escutcheon: metal
/ material handles: metal
/ min. operating pressure: 1 bar
/ max. operating pressure: 10 bar
/ connection type: basic set iBox universal 2 (# 01400180)

1 function

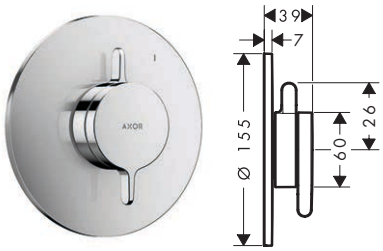

2 functions

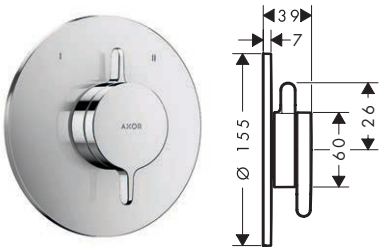

Special feature

Overview variants

Number of functions	Max. flow rate at 3 bar (l/min)	Finish	Code no.
1 function	29.5	Chrome	48615000
		Brushed Bronze	48615140
		Brushed Black Chrome	48615340
		Matt Black	48615670
		Brushed Brass	48615950
		Polished Gold Optic	48615990
		AXOR FinishPlus*	48615XXX
2 functions	29.5	Chrome	48415000
		Brushed Bronze	48415140
		Brushed Black Chrome	48415340
		Matt Black	48415670
		Brushed Brass	48415950
		Polished Gold Optic	48415990
		AXOR FinishPlus*	48415XXX

Required parts:		Code no.
	AXOR iBox universal 2 Basic set	01400180

Optional parts:		For	Code no.
	Security combination according to EN 1717	48415XXX	13077000

*AXOR FinishPlus: For further AXOR FinishPlus surfaces please see the AXOR FinishPlus overview on page 44.

Showerpipes 1jet with thermostat

Features of all variants

/ consists of: overhead shower, hand shower, slider, shower thermostat, shower hose, shower bar
/ overhead shower AXOR One 280 1jet
/ shower head size overhead shower: 280 mm
/ spray type overhead shower: PowderRain and Rain in combination
/ spray type hand shower: PowderRain
/ minimum flow pressure: 0,9 bar max.
/ max. operating pressure: 10 bar
/ ball-joint: overhead shower angle adjustable
/ height-adjustable slider
/ swivel shower arm: swivelling shower arm
/ SafetyStop at 40°C
/ temperature and water flow control
/ mounting type: concealed
/ connection type: basic set
/ connection thread: G ½
/ intrinsically safe against backflow
/ 2 functions

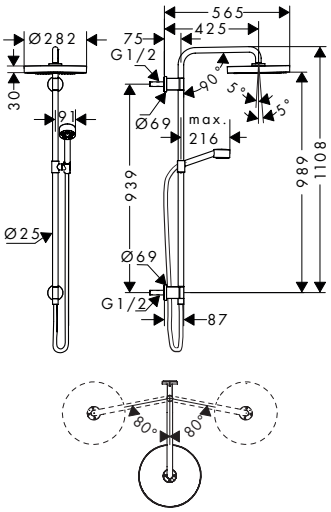

Special feature

Technologies

Spray types

Overview variants

Shower head size	Number of sprays	Spray types	Function from (l/min)	Max. flow rate at 3 bar (l/min)	Min. flow pressure (bar)	Finish	Code no.
280	1	PowderRain and Rain in combination	6.2	8	0.9	Chrome	48797000
						Brushed Bronze	48797140
						Brushed Black Chrome	48797340
						Matt Black	48797670
						Brushed Brass	48797950
						Polished Gold Optic	48797990
						AXOR FinishPlus*	48797XXX
280	1	PowderRain and Rain in combination	8.8	12	0.9	Chrome	48796000
						Brushed Bronze	48796140
						Brushed Black Chrome	48796340
						Matt Black	48796670
						Brushed Brass	48796950
						Polished Gold Optic	48796990
						AXOR FinishPlus*	48796XXX

Required parts:		Code no.
	Basic set for Showerpipe/ shower column	10902180

Measurements within scale drawings are in mm.
Technical specifications and units of measure are subject to change.

Showerpipes 1jet with thermostat

Features of all variants

/ consists of: overhead shower, hand shower, slider, shower thermostat, shower hose, shower bar
/ overhead shower AXOR One 280 1jet
/ shower head size overhead shower: 280 mm
/ spray type overhead shower: PowderRain and Rain in combination
/ spray type hand shower: PowderRain max
/ max. operating pressure: 10 bar
/ ball-joint: overhead shower angle adjustable
/ height-adjustable slider
/ swivel shower arm: swivelling shower arm
/ SafetyStop at 40°C
/ temperature and water flow control
/ mounting type: exposed installation
/ connection thread: G ½
/ intrinsically safe against backflow
/ 2 functions

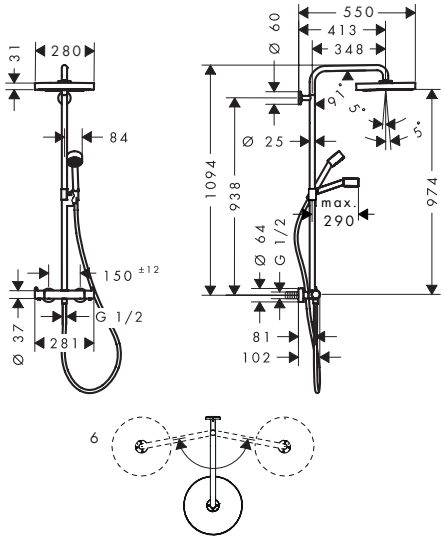

Special feature

Technologies

Spray types

Overview variants

Shower head size	Number of sprays	Spray types	Function from (l/min)	Max. flow rate at 3 bar (l/min)	Min. flow pressure (bar)	Finish	Code no.
280	1	PowderRain and Rain in combination	6	8	1	Chrome	48795000
						Brushed Bronze	48795140
						Brushed Black Chrome	48795340
						Matt Black	48795670
						Brushed Brass	48795950
						Polished Gold Optic	48795990
						AXOR FinishPlus*	48795XXX
280	1	PowderRain and Rain in combination	8.8	13.2	1.7	Chrome	48794000
						Brushed Bronze	48794140
						Brushed Black Chrome	48794340
						Matt Black	48794670
						Brushed Brass	48794950
						Polished Gold Optic	48794990
						AXOR FinishPlus*	48794XXX

*AXOR FinishPlus: For further AXOR FinishPlus surfaces please see the AXOR FinishPlus overview on page 44.

Showerpipe 280 1jet for concealed installation

Features of all variants

/ consists of: overhead shower, hand shower, slider, wall outlet, shower hose, shower bar
/ overhead shower AXOR One 280 1jet
/ shower head size overhead shower: 280 mm
/ spray type overhead shower: PowderRain and Rain in combination
/ requires a mixer for 2 functions
/ spray type hand shower: PowderRain
/ flow rate of hand shower at 3 bar: 8,3 l/min
/ maximum flow rate for Showerpipe at 3 bar: 12,7 l/min
/ minimum flow pressure: 2 bar
/ max. operating pressure: 10 bar
/ ball-joint: overhead shower angle adjustable
/ shower holder inclination angle can be adjusted continously
/ mounting type: concealed
/ shower bar diameter: 25 mm
/ height-adjustable slider
/ swivel shower arm: swivelling shower arm
/ connection dimension: DN15

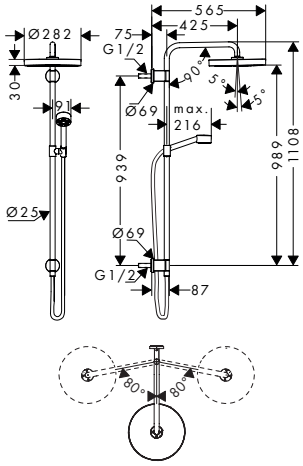

Technologies

Spray types

Shower head size	Number of sprays	Spray types	Function from (l/min)	Max. flow rate at 3 bar (l/min)	Min. flow pressure (bar)	Finish	Code no.
280	1	PowderRain and Rain in combination	8.8	12.7	2	Chrome	48790000
						Brushed Bronze	48790140
						Brushed Black Chrome	48790340
						Matt Black	48790670
						Matt White	48790700
						Brushed Brass	48790950
						Polished Gold Optic	48790990
						AXOR FinishPlus*	48790XXX

Required parts:

		Code no.
	AXOR One Basic set for Showerpipe	48798180

Optional parts:

		Finish	Code no.
	AXOR One Thermostatic module for concealed installation for 2 functions	Chrome	45712000
		Brushed Bronze	45712140
		Brushed Black Chrome	45712340
		Matt Black	45712670
		Matt White	45712700
		Brushed Brass	45712950
		Polished Gold Optic	45712990
		AXOR FinishPlus*	45712XXX

Measurements within scale drawings are in mm.
Technical specifications and units of measure are subject to change.

Basic set for Showerpipe

Features

/ suitable for AXOR One Showerpipe 48790XXX
/ connection dimension: G ½
/ sound-decoupled installation
/ minimum mounting depth: 46 mm
/ maximum mounting depth: 74 mm

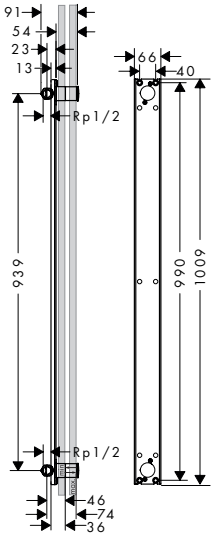

Code no.
48798180

Shower set 75 1jet EcoSmart with wall connection

Features of all variants

/ consists of: hand shower, shower bar, shower hose, slider
/ shower head size: 73 mm
/ spray type: PowderRain
/ QuickClean: Limescale deposits can simply be rubbed off with your finger
/ maximum flow rate at 3 bar: 9,1 l/min
/ minimum flow pressure: 0,8 bar
/ operating pressure: min. 1.5 bar/max. 6 bar
/ wall supports of metal
/ profile pipe: round
/ shower bar diameter: 25 mm
/ drilling distance: 929 mm
/ shower hose with conical nut on both ends
/ pivot connector prevents hose from tangling
/ metal hand shower holder

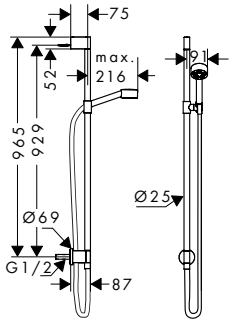

Special feature

EcoSmart

Technologies

Quick Clean

Spray types

Powder Rain

Drilling distance (mm)	Shower head size	Spray types	Function from (l/min)	Max. flow rate at 3 bar (l/min)	Min. flow pressure (bar)	Finish	Code no.
929	75	PowderRain	5.8	9.1	0.8	Chrome	48791000
						Brushed Bronze	48791140
						Brushed Black Chrome	48791340
						Matt Black	48791670
						Matt White	48791700
						Brushed Brass	48791950
						Polished Gold Optic	48791990
						AXOR FinishPlus*	48791XXX

*AXOR FinishPlus: For further AXOR FinishPlus surfaces please see the AXOR FinishPlus overview on page 44.

Shower bar 0,90 m with wall connection and shower hose 1.60 m

Features of all variants

/ consists of: shower bar, slider, wall outlet, shower hose
/ pivot connector prevents hose from tangling
/ for shower hoses with a conical nut
/ pipe length: 965 mm
/ shower bar diameter: 25 mm
/ profile pipe: round
/ drilling distance: 929 mm
/ shower hose length: 1600 mm
/ slider steplessly adjustable
/ wall supports of metal
/ metal hand shower holder

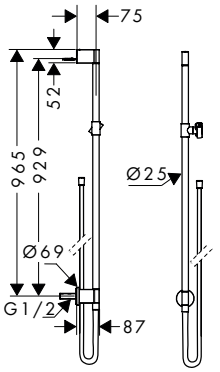

Length (m)	Shower hose length (mm)	Finish	Code no.
0,90	1600	Chrome	48792000
		Brushed Bronze	48792140
		Brushed Black Chrome	48792340
		Matt Black	48792670
		Matt White	48792700
		Brushed Brass	48792950
		Polished Gold Optic	48792990
		AXOR FinishPlus*	48792XXX

Overhead shower 75 1jet EcoSmart with shower arm

Features of all variants

/ consists of: overhead shower, shower arm
/ shower head size: 73 mm
/ spray type: PowderRain
/ flow rate PowderRain spray at 3 bar: 8,7 l/min
/ function from: 6,3 l/min
/ maximum flow rate at 3 bar: 8,7 l/min
/ minimum flow pressure: 1 bar
/ projection: 116 mm
/ overhead shower angle adjustable
/ material spray disc: metal
/ overhead shower removable for cleaning
/ shower arm length: 85 mm
/ installation: wall
/ connection thread: G ½
/ connection dimension: DN15
/ suitable for continous flow water heaters

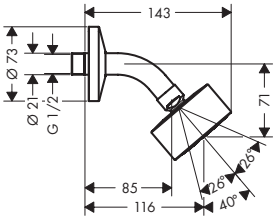

Special feature

Technologies

Spray types

Measurements within scale drawings are in mm.
Technical specifications and units of measure are subject to change.

Overhead shower 75 1jet EcoSmart with shower arm

Shower head size	Number of sprays	Spray types	Function from (l/min)	Max. flow rate at 3 bar (l/min)	Min. flow pressure (bar)	Finish	Code no.
75	1	PowderRain	6.3	8.7	1	Chrome	48490000
						Brushed Bronze	48490140
						Brushed Black Chrome	48490340
						Matt Black	48490670
						Matt White	48490700
						Brushed Brass	48490950
						Polished Gold Optic	48490990
						AXOR FinishPlus*	48490XXX

Overhead shower 2jet, 1jet with shower arm

Features of all variants

/ consists of: overhead shower, shower arm
/ shower head size: 280 mm
/ material spray disc: metal
/ overhead shower removable for cleaning
/ installation: wall
/ connection dimension: DN15
/ suitable for continous flow water heaters

2 spray types

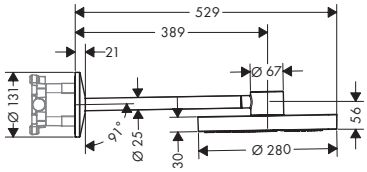

1 spray type

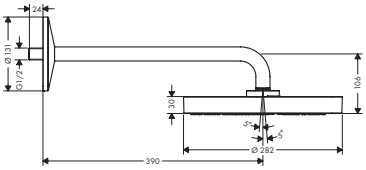

Technologies

Quick Clean

Spray types

Powder Rain

Rain

Overview variants

Shower head size	Number of sprays	Spray types	Function from (l/min)	Max. flow rate at 3 bar (l/min)	Min. flow pressure (bar)	Length shower arm (mm)	Finish	Code no.
280	2	PowderRain, Rain	6.7	12	1.5	389	Chrome	48492000
							Brushed Bronze	48492140
							Brushed Black Chrome	48492340
							Matt Black	48492670
							Matt White	48492700
							Brushed Brass	48492950
							Polished Gold Optic	48492990
							AXOR FinishPlus*	48492XXX
280	1	PowderRain and Rain in combination	8.7	12.3	1.2	390	Chrome	48491000
							Brushed Bronze	48491140
							Brushed Black Chrome	48491340
							Matt Black	48491670
							Matt White	48491700
							Brushed Brass	48491950
							Polished Gold Optic	48491990
							AXOR FinishPlus*	48491XXX

Required parts:	For	Code no.
AXOR ShowerSolutions Basic set for overhead shower with shower arm	48492XXX	35361180

*AXOR FinishPlus: For further AXOR FinishPlus surfaces please see the AXOR FinishPlus overview on page 44.

Overhead showers 2jet, 1jet with ceiling connector

Features of all variants

/ consists of: overhead shower, ceiling connector
/ shower head size: 280 mm
/ material spray disc: metal
/ overhead shower removable for cleaning
/ metal ceilling connector
/ installation: ceiling mounting
/ connection dimension: DN15
/ suitable for continous flow water heaters

2 spray types

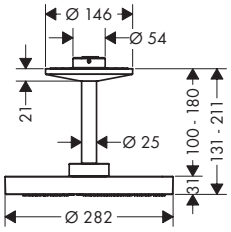

1 spray type

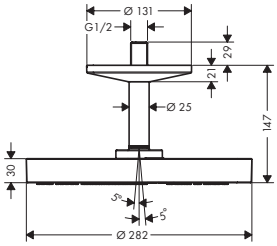

Technologies

Quick Clean

Spray types

Powder Rain

Rain

Overview variants

Shower head size	Number of sprays	Spray types	Function from (l/min)	Max. flow rate at 3 bar (l/min)	Min. flow pressure (bar)	Finish	Code no.
280	2	PowderRain, Rain	1	18	1	Chrome	48494000
						Brushed Bronze	48494140
						Brushed Black Chrome	48494340
						Matt Black	48494670
						Matt White	48494700
						Brushed Brass	48494950
						Polished Gold Optic	48494990
						AXOR FinishPlus*	48494XXX
280	1	PowderRain and Rain in combination	9.2	12.2	1.4	Chrome	48493000
						Brushed Bronze	48493140
						Brushed Black Chrome	48493340
						Matt Black	48493670
						Matt White	48493700
						Brushed Brass	48493950
						Polished Gold Optic	48493990
						AXOR FinishPlus*	48493XXX

Required parts:		For	Code no.
	AXOR ShowerSolutions Basic set for overhead shower with ceiling connector	48494XXX	26434180

Optional parts:		For	Finish	Code no.
	AXOR One Ceiling connector 300 mm for overhead shower 280 2jet	48494XXX	Chrome	48496000
			Brushed Bronze	48496140
			Brushed Black Chrome	48496340
			Matt Black	48496670
			Matt White	48496700
			Brushed Brass	48496950
			Polished Gold Optic	48496990
			AXOR FinishPlus*	48496XXX
	AXOR One Ceiling connector 300 mm for overhead shower 280 1jet	48493XXX	Chrome	48495000
			Brushed Bronze	48495140
			Brushed Black Chrome	48495340
			Matt Black	48495670
			Matt White	48495700
			Brushed Brass	48495950
			Polished Gold Optic	48495990
			AXOR FinishPlus*	48495XXX

Measurements within scale drawings are in mm.
Technical specifications and units of measure are subject to change.

Hand shower 75 1jet EcoSmart

Features of all variants

/ shower head size: 73 mm
/ spray type: PowderRain
/ QuickClean: Limescale deposits can simply be rubbed off with your finger
/ maximum flow rate at 3 bar: 9,1 l/min
/ function from: 5,8 l/min
/ minimum flow pressure: 0,8 bar
/ material: metal
/ with internal water conduction
/ rinseable filter washer
/ connection thread: G ½
/ suitable for continous flow water heaters

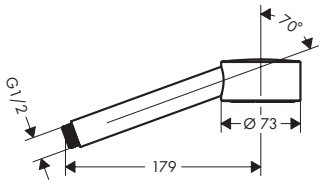

Special feature

Technologies

Spray types

Shower head size	Number of sprays	Spray types	Function from (l/min)	Max. flow rate at 3 bar (l/min)	Min. flow pressure (bar)	Finish	Code no.
75	1	PowderRain	5.8	9.1	0.8	Chrome	48651000
						Brushed Bronze	48651140
						Brushed Black Chrome	48651340
						Matt Black	48651670
						Matt White	48651700
						Brushed Brass	48651950
						Polished Gold Optic	48651990
						AXOR FinishPlus*	48651XXX

Hand shower 2jet

Features of all variants

/ shower head size: 124 x 24 mm
/ spray type: Rain, RainFlow
/ convenient spray selection via Select button
/ QuickClean: Limescale deposits can simply be rubbed off with your finger
/ maximum flow rate at 3 bar: 11,5 l/min
/ function from: 10,5 l/min
/ minimum flow pressure: 2,4 bar
/ with internal water conduction
/ rinseable filter washer
/ connection thread: G ½
/ suitable for continous flow water heaters
/ not recommended for rim-/ tile-mounted mixers

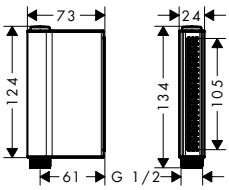

Technologies

Spray types

Shower head size	Number of sprays	Spray types	Function from (l/min)	Max. flow rate at 3 bar (l/min)	Min. flow pressure (bar)	Finish	Code no.
124/24	2	Rain, RainFlow	10.5	11.5	2.4	Chrome	45720000
						Brushed Bronze	45720140
						Brushed Black Chrome	45720340
						Matt Black	45720670
						Matt White	45720700
						Brushed Brass	45720950
						Polished Gold Optic	45720990
						AXOR FinishPlus*	45720XXX

*AXOR FinishPlus: For further AXOR FinishPlus surfaces please see the AXOR FinishPlus overview on page 44.

Affusion pipe set

Features of all variants

/ consists of: affusion pipe, shower holder, wall outlet, textile shower hose
/ maximum flow rate at 3 bar: 13 l/min
/ operating pressure: min. 1 bar/max. 10 bar
/ suitable for cold water connection
/ Laminar spray with spray former
/ spray is not enriched with air
/ shower hose with cylindrical nut on both ends
/ pivot connector prevents hose from tangling
/ shower hose length: 2000 mm
/ connection type: G ½
/ with non-return valve
/ integrated support function
/ wall supports of metal
/ wall mounting: screw fastening
/ rinseable filter washer
/ not intrinsically safe against backflow

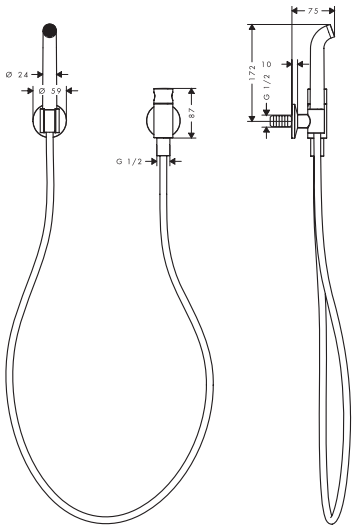

Number of sprays	Max. flow rate at 3 bar (l/min)	Finish	Code no.
1	13	Chrome	48655000
		Brushed Bronze	48655140
		Brushed Black Chrome	48655340
		Brushed Brass	48655950
		Polished Gold Optic	48655990
		AXOR FinishPlus*	48655XXX

Affusion pipe

Features of all variants

/ maximum flow rate at 3 bar: 13 l/min
/ Laminar spray with spray former
/ spray is not enriched with air
/ suitable for cold water connection
/ rinseable filter washer
/ connection thread: G ½
/ suitable for continous flow water heaters

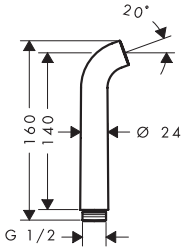

Number of sprays	Max. flow rate at 3 bar (l/min)	Finish	Code no.
1	13	Chrome	48656000
		Brushed Bronze	48656140
		Brushed Black Chrome	48656340
		Brushed Brass	48656950
		Polished Gold Optic	48656990
		AXOR FinishPlus*	48656XXX

Measurements within scale drawings are in mm.
Technical specifications and units of measure are subject to change.

Porter unit

Features

/ for hoses with cylindrical nuts
/ integrated support function
/ maximum flow rate at 3 bar: 15 l/min
/ metal
/ connection type: G ½

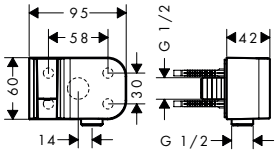

Finish	Code no.
Chrome	45723000
Brushed Bronze	45723140
Brushed Black Chrome	45723340
Matt Black	45723670
Matt White	45723700
Brushed Brass	45723950
Polished Gold Optic	45723990
AXOR FinishPlus*	45723XXX

Porter unit round

Features

/ for shower hoses with a conical nut
/ integrated support function
/ maximum flow rate at 3 bar: 15 l/min
/ metal
/ connection type: G ½

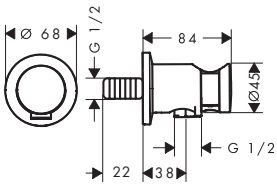

Finish	Code no.
Chrome	48780000
Brushed Bronze	48780140
Brushed Black Chrome	48780340
Matt Black	48780670
Brushed Brass	48780950
Polished Gold Optic	48780990
AXOR FinishPlus*	48780XXX

Wall outlet stop with shut-off valve

Features

/ connection type: DN15
/ hose connection DN15
/ with non-return valve
/ maximum flow rate at 3 bar: 21,8 l/min

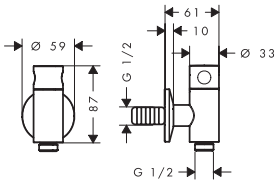

Finish	Code no.
Chrome	48781000
Brushed Bronze	48781140
Brushed Black Chrome	48781340
Brushed Brass	48781950
Polished Gold Optic	48781990
AXOR FinishPlus*	48781XXX

*AXOR FinishPlus: For further AXOR FinishPlus surfaces please see the AXOR FinishPlus overview on page 44.

Possible product combinations

Shower controls

AXOR ShowerSelect ID
Thermostat for concealed installation round
for 2 functions

#36750XXX

page 519

Electronic faucets

AXOR Uno
Electronic basin mixer with temperature
pre-adjustment with mains connection 230 V

#38010XXX

page 591

AXOR Uno
Electronic basin mixer for concealed installation
wall-mounted with spout 225 mm

#38120XXX

page 589

Bath spouts

AXOR Uno
Bath spout curved

#38411XXX

page 351

AXOR Uno
Bath spout curved floor-standing

#38412XXX

page 350

Further complementary products

AXOR Universal Circular
Bath towel rail 600 mm

#42860XXX

page 561

AXOR Suite Basins & Bathtub
Wash bowl 400 without tap hole and overflow

#42001XXX

page 602

AXOR Drain
Finish set shower drain 700

#42520XXX

page 632

AXOR FlushPlate
Flush plate for Geberit Sigma

#42530XXX

page 581

AXOR Bidette Showers
Bidette hand shower 1jet round for cold water
with shower holder and shower hose 1.25 m

#29240XXX

page 463

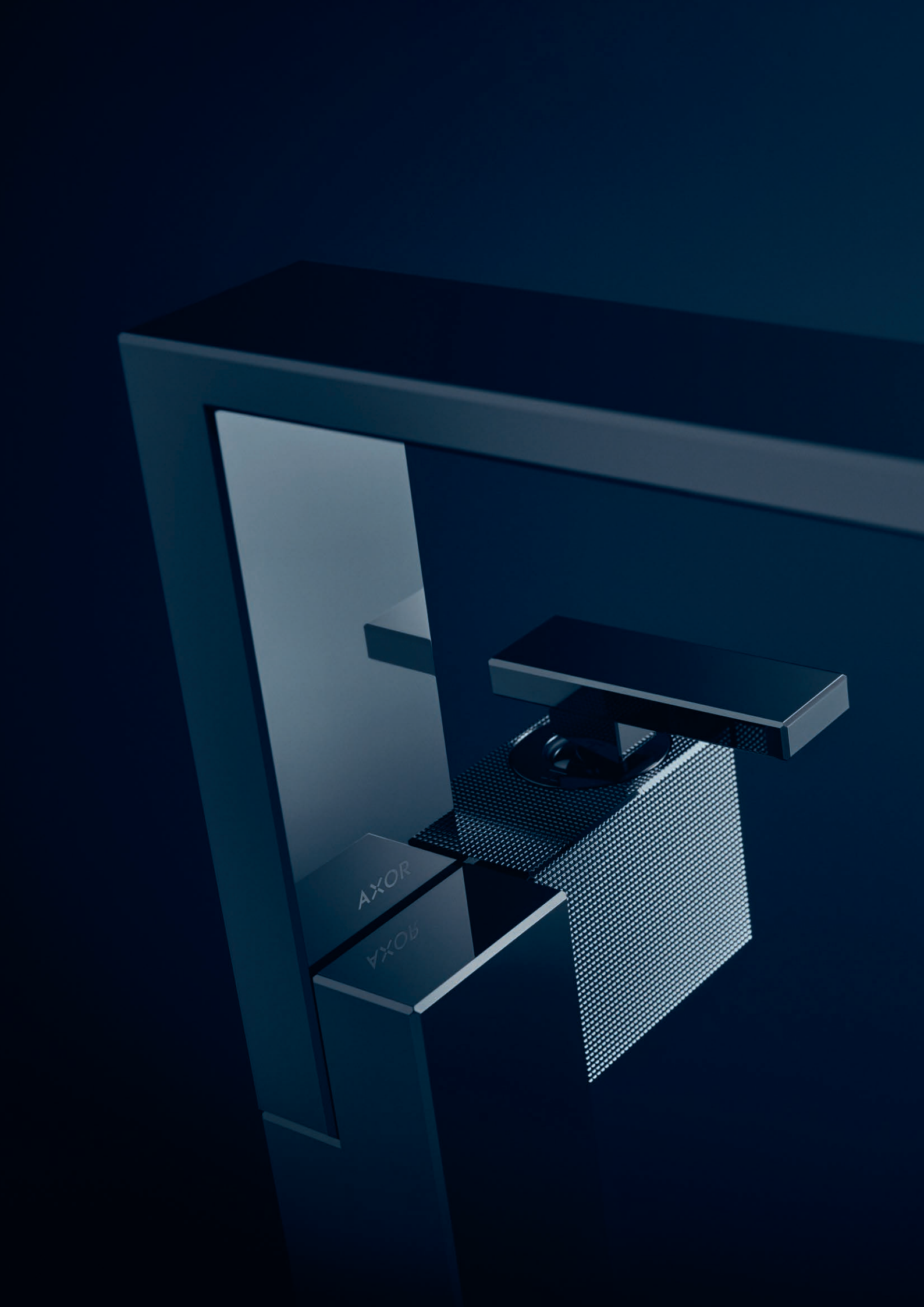
AXOR

Basin

Bidet

Bath

Shower

Thermostatic mixers / valves / diverters

Complementary products

AXOR EDGE

DESIGN

–

JEAN-MARIE MASSAUD

AXOR

"With AXOR Edge, we explore the world of extreme refinement an uniqueness."

JEAN-MARIE MASSAUD

AXOR Edge

The power of architectonics

AXOR Edge is a masterpiece in the tradition of the early 20th century avantgarde. Cubes, the distinctive design element, are put together asymmetrically to form an architectonic sculpture. In addition to the geometric shapes, the collection is characterized by the ultra-precision of its surfaces and edges, which turns the fixtures into brilliant, high-gloss jewels for the bathroom.

Design: Jean-Marie Massaud

Characteristic design feature:

Avant-garde design: Asymmetrically arranged blocks create a mixer that is an architectonic sculpture.

The designer's idea:

Jewels for the bathroom: With AXOR Edge we wanted to make a sculpture out of an object we use every day, a sculpture that evokes emotion with its precise edges, high-gloss surfaces and refined structures.

Special collection highlights:

/ High-gloss surfaces: The brilliance is generated by especially precise milling of the surfaces and edges

/ New production technology: Using a diamond-cutting machine of the latest generation. It sets new technological standards in the manufacturing process. The precision is comparable to that of the watch, jewelry and optical industries

/ Diamond-cut: Fine, luxurious structural details provide exciting contrasts and a special sensory experience

/ Complete set of bathroom fittings: Mixers for the wash basin and bathtub as well as thermostats for the shower

/ AXOR Edge is the second collection created in cooperation with French star designer Jean-Marie Massaud

→ Learn more about AXOR Edge: axor-design.com

When diamonds are used in a production process, it's to ensure the greatest precision and the finest details with the most refined materials. Precision is the foundation for brilliance, and production with diamonds is the benchmark for perfect surfaces and edges. Manufacturing AXOR Edge depends on precision to thousandths of a millimeter. An exactness that is realized by using a diamond-cutting machine of the newest generation, a tool like those used in the aerospace and laser industries.

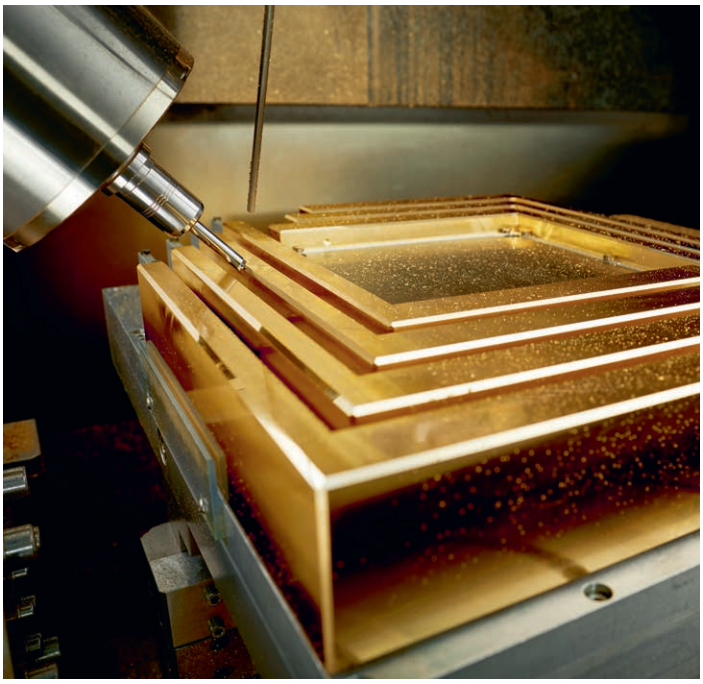

The beveled chamfers are milled at an angle of exactly 45° and join together with absolute precision. This creates a surface without any unevenness, which reflects light perfectly. Standards for testing gloss level in quality assurance, redefined especially for this collection, ensure that exactly these high requirements are met.

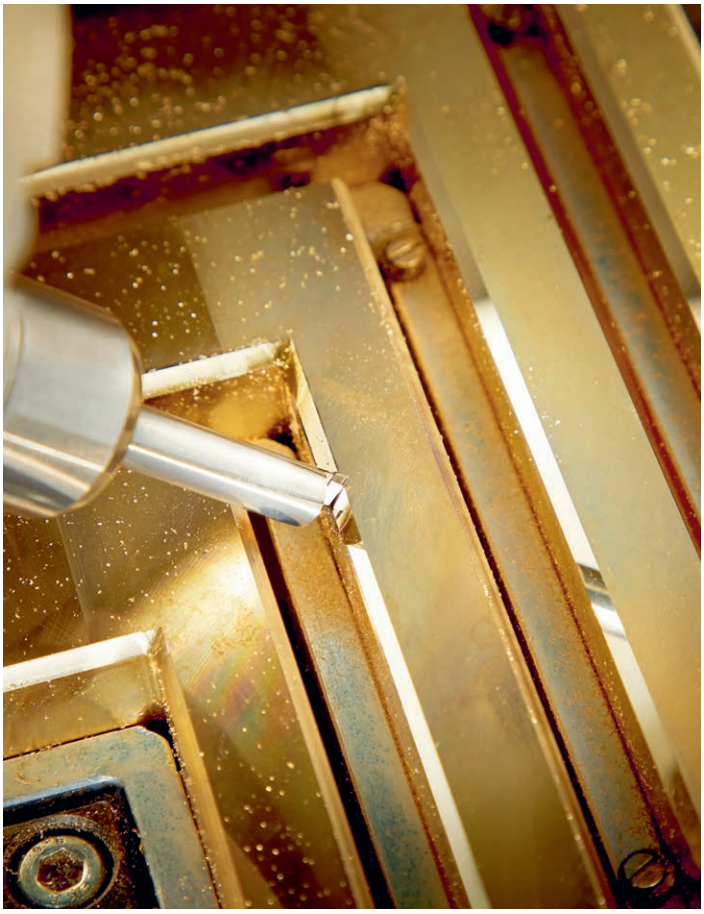

A diamond is used to mill the beveled chamfer at an angle of exactly 45° to a high gloss.

The fine pattern structures are created with the same precision: the diamond cut. By milling the solid block of brass line by line in several steps, precise pyramid frustums are formed, creating a luxurious detail that provides exciting contrasts.

A line that will become a diamond cut in the finished appearance is milled up to five times.

Bringing high-gloss and ultra-precision together in one mixer

AXOR Edge mixers break through boundaries: High-gloss surfaces are a striking feature of the collection. To achieve this brilliance, the highest precision is required in production so that light breaks perfectly on the surface of the mixer. That's why a diamond-cutting machine is used. It creates facets on the surfaces and chamfers of the mixer with precision to the micrometer, generating a fascinating play of light and shadow. Exactly these precise details—the meticulous 45° chamfer and the innovative, three-dimensional diamond cut—turn the mixer into a gem.

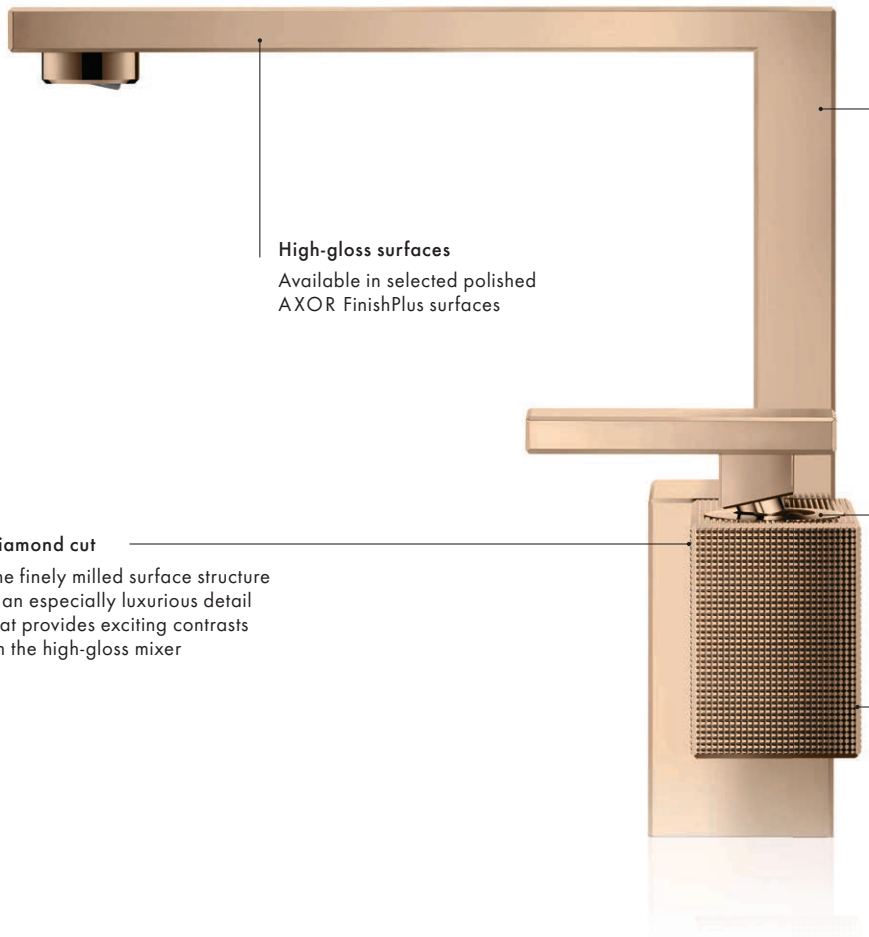

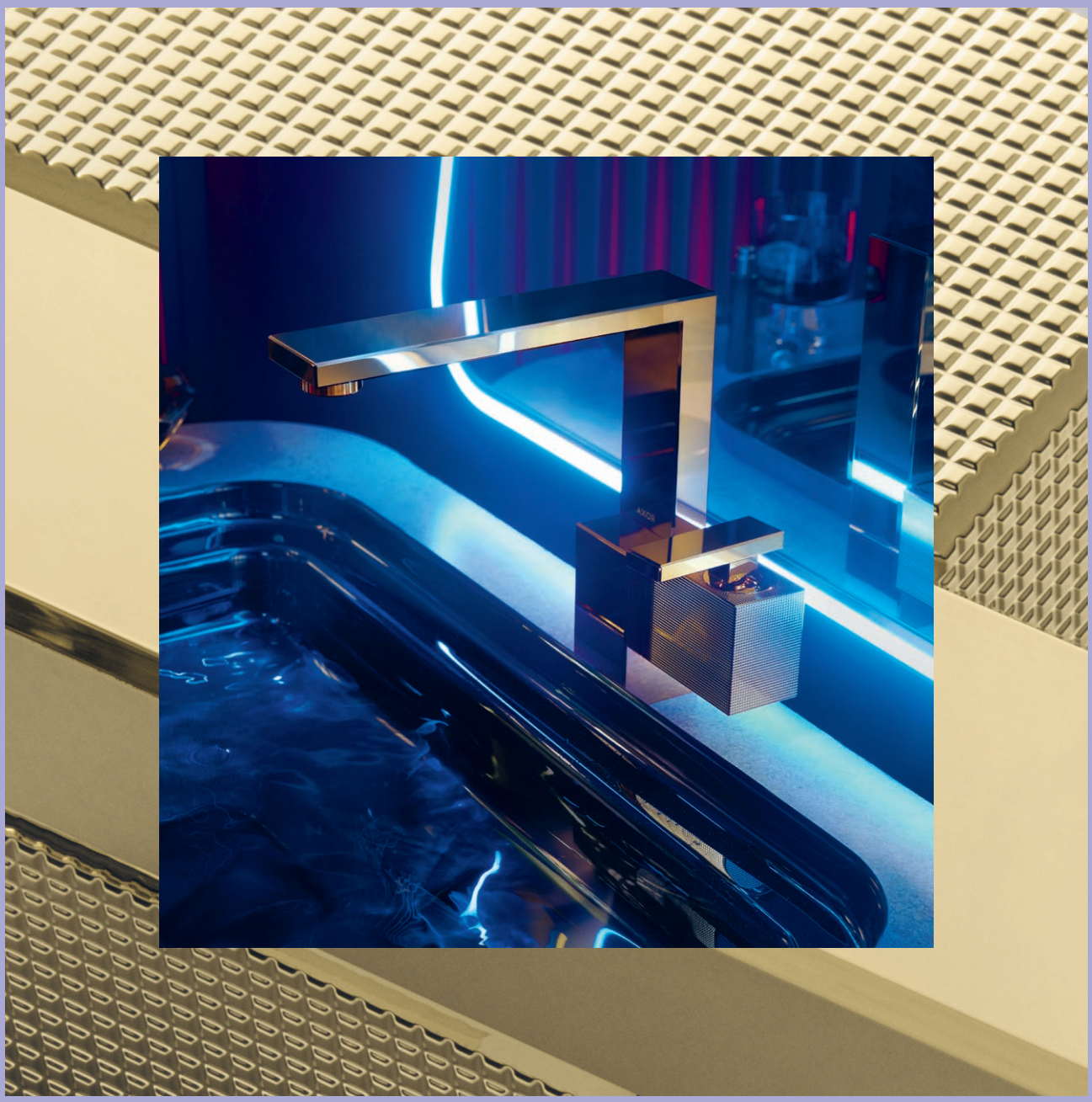

Easy to select outlets
Selecting the proper outlet is simple thanks to engraved, easy to read icons

Volume control
Control volume with the on / off function for water flow

Diamond cut
The three-dimensionality of the diamond cut, with its precise pyramid frustums, creates a new sensory experience

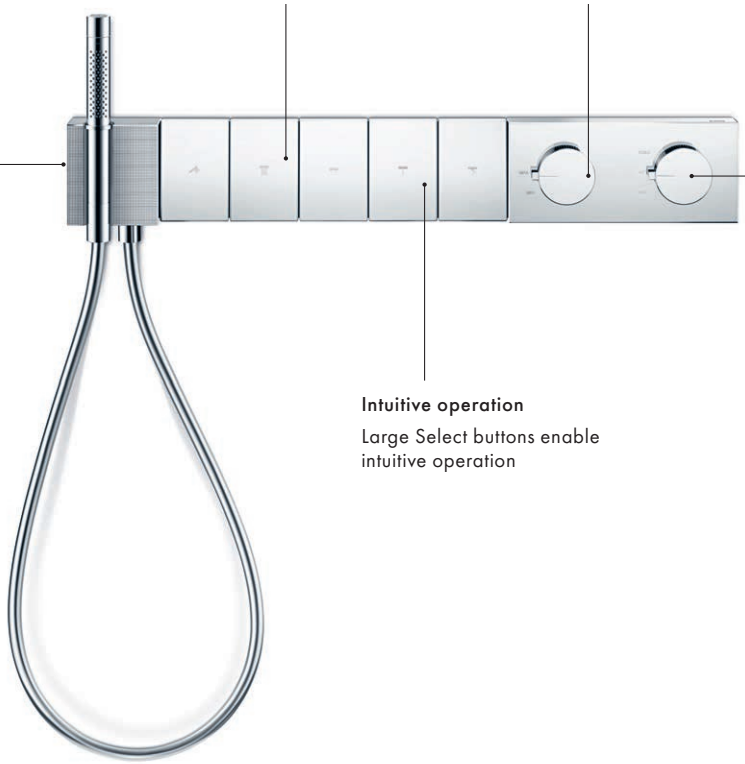

Temperature adjustment
Thermostatic mixer with clear temperature display

Intuitive operation
Large Select buttons enable intuitive operation

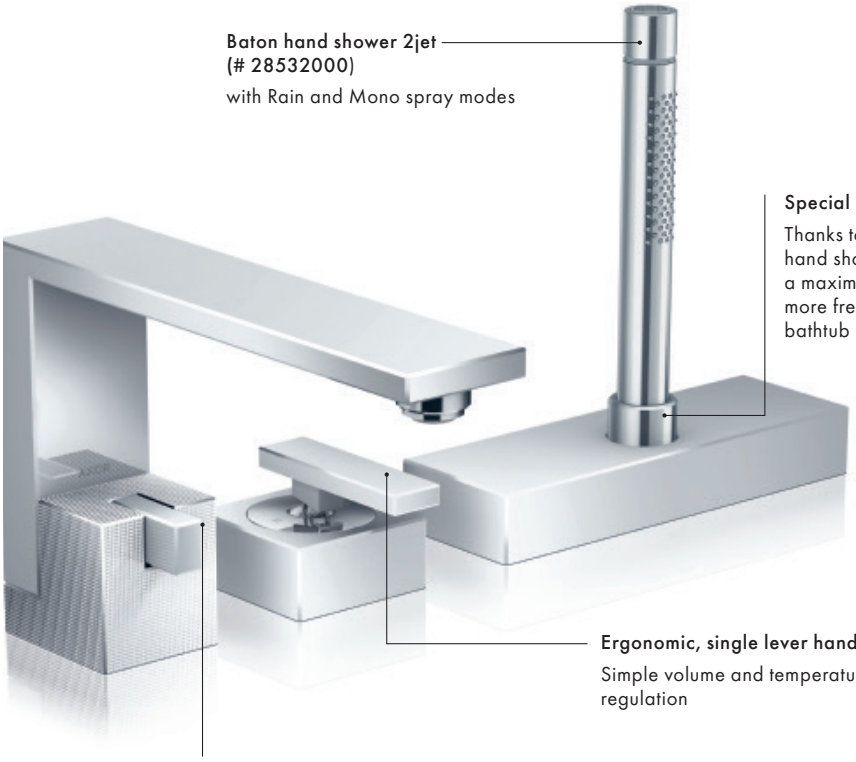

User-friendly, convenient hose coiling system

The sBox for bathtubs features an innovative hose coiling system included in the scope of delivery for the basic set of the AXOR Edge three-hole single lever rim-mounted mixer and the basic set of the AXOR Edge rim-mounted set. With the sBox, the hose coils up smoothly, quietly and safely. The hand shower's maximum extended length is 1.45 m.

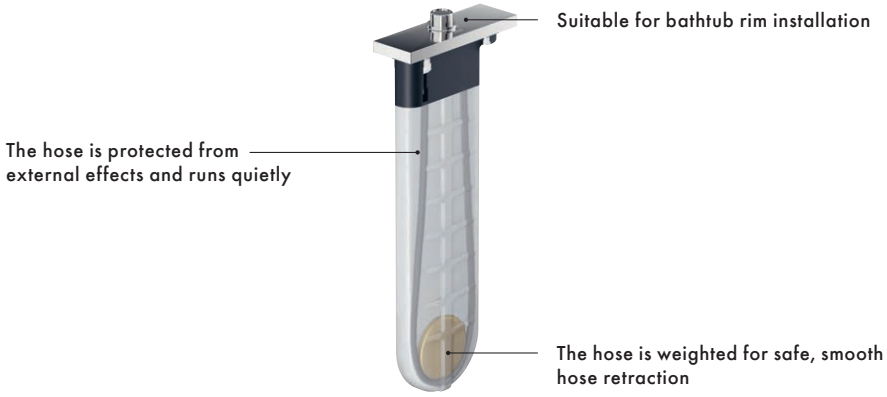

AXOR

Single lever basin mixers with diamond cut

Features of all variants

/ consists of: single lever basin mixer, waste set
/ handle variant: lever handle
/ spray type: normal spray
/ maximum flow rate at 3 bar: 5 l/min
/ ceramic cartridge
/ temperature limitation adjustable
/ suitable for continuous flow water heaters
/ push-open waste set G 1¼
/ material waste set: metal
/ connection type: G ⅜ hose connections
/ connection dimension: DN15
/ EU taxonomy: max. 6 l/min – Substantial Contribution (SC) possible

130

190

280

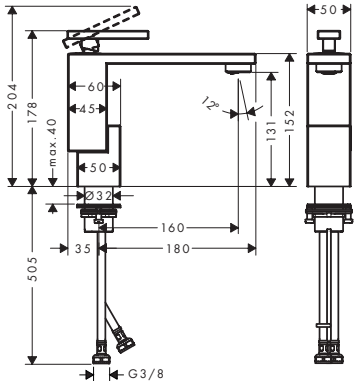

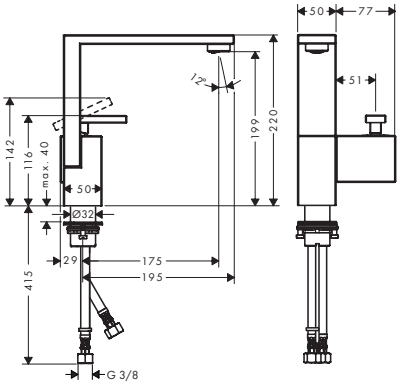

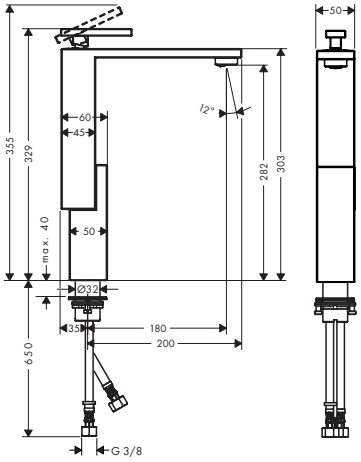

Special feature

EcoSmart

Technologies

AirPower
Comfort Zone

Overview variants

ComfortZone	Projection (mm)	Spout height (mm)	For wash bowls	Finish	Code no.
130	160	131	–	Chrome	46011000
				AXOR FinishPlus*	46011XXX
190	175	199	–	Chrome	46021000
				AXOR FinishPlus*	46021XXX
280	180	282	■	Chrome	46031000
				AXOR FinishPlus*	46031XXX

This product is not available in brushed AXOR FinishPlus surfaces.

Measurements within scale drawings are in mm.
Technical specifications and units of measure are subject to change.

3-hole basin mixer 130 with push-open waste set – diamond cut

Features of all variants

/ consists of: 3-hole basin mixer, waste set
/ ComfortZone: 130
/ projection: 173 mm
/ spout height: 130 mm
/ handle variant: lever handle
/ spray type: normal spray
/ maximum flow rate at 3 bar: 5 l/min
/ ceramic valves hot/cold 90°
/ suitable for continuous flow water heaters
/ push-open waste set G 1¼
/ material waste set: metal
/ connection type: G ⅜ hose connections
/ connection dimension: DN15
/ EU taxonomy: max. 6 l/min – Substantial Contribution (SC) possible

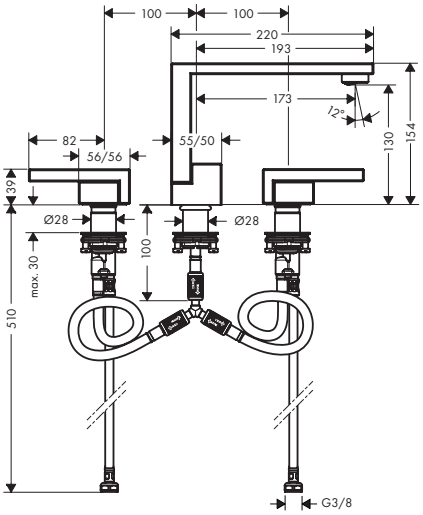

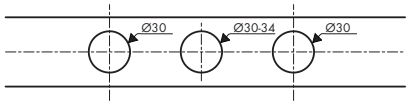

Special feature

Technologies

ComfortZone	Projection (mm)	Spout height (mm)	Structure element	Finish	Code no.
130	173	130	diamond cut	Chrome	46051000
				AXOR FinishPlus*	46051XXX

This product is not available in brushed AXOR FinishPlus surfaces.

Optional parts:	Code no.
Hose extension set for 3-hole basin mixer	38959000

3-hole basin mixer for concealed installation wall-mounted with spout 190 mm and push-open waste set – diamond cut

Features of all variants

/ consists of: 3-hole basin mixer, waste set
/ projection: 190 mm
/ handle variant: lever handle
/ spray type: normal spray
/ maximum flow rate at 3 bar: 5 l/min
/ ceramic valves hot/cold 90°
/ suitable for continuous flow water heaters
/ push-open waste set G 1¼
/ material waste set: metal
/ connection type: basic set
/ connection dimension: DN15
/ EU taxonomy: max. 6 l/min - Substantial Contribution (SC) possible

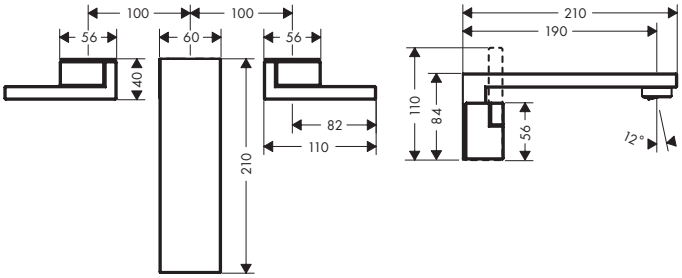

Special feature

Technologies

Projection (mm)	Structure element	Finish	Code no.
190	diamond cut	Chrome	46061000
		AXOR FinishPlus*	46061XXX

For more information about this product, please see the next page.

*AXOR FinishPlus: For further AXOR FinishPlus surfaces please see the AXOR FinishPlus overview on page 44.

3-hole basin mixer for concealed installation wall-mounted with spout 190 mm and push-open waste set – diamond cut

This product is not available in brushed AXOR FinishPlus surfaces.

Required parts:		Code no.
	Basic set for 3-hole basin mixer for concealed installation wall-mounted	10303180

Optional parts:		Code no.
	Seal	96383000
	AXOR Starck Extension set 25 mm for basic set for 3-hole basin mixer wall-mounted	96259000

Single lever basin mixer floor-standing with push-open waste set – diamond cut

Features of all variants

/ consists of: single lever basin mixer, waste set
/ projection: 235 mm
/ handle variant: lever handle
/ spray type: normal spray
/ maximum flow rate at 3 bar: 5 l/min
/ ceramic cartridge
/ temperature limitation adjustable
/ suitable for continuous flow water heaters
/ push-open waste set G 1¼
/ material waste set: metal
/ connection type: basic set
/ connection dimension: DN15
/ EU taxonomy: max. 6 l/min – Substantial Contribution (SC) possible

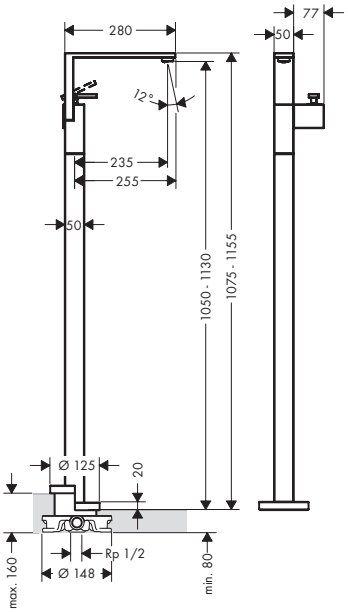

Special feature

EcoSmart

Technologies

AirPower

Projection (mm)	Structure element	Finish	Code no.
235	diamond cut	Chrome	46041000
		AXOR FinishPlus*	46041XXX

This product is not available in brushed AXOR FinishPlus surfaces.

Required parts:		Code no.
	Basic set for mixers floor-standing	10452180

Optional parts:		Code no.
	Sealing foil for basic set bath mixer floor-standing	96441000

Measurements within scale drawings are in mm.
Technical specifications and units of measure are subject to change.

Single lever bidet mixer with push-open waste set – diamond cut

Features of all variants

/ consists of: single lever bidet mixer, waste set
/ projection: 149 mm
/ spout height: 99 mm
/ aerator with ball pivot
/ spray type: normal spray
/ maximum flow rate at 3 bar: 7 l/min
/ ceramic cartridge
/ temperature limitation adjustable
/ suitable for continous flow water heaters
/ push-open waste set G 1¼
/ material waste set: metal
/ connection type: G ⅜ hose connections
/ connection dimension: DN15

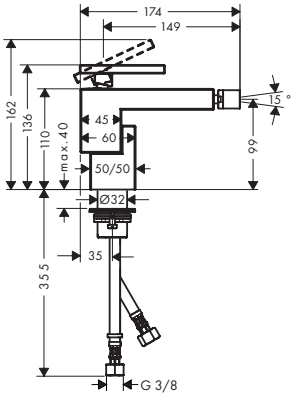

Special feature

EcoSmart

Technologies

AirPower

Projection (mm)	Spout height (mm)	Structure element	Finish	Code no.
149	99	diamond cut	Chrome	46211000
			AXOR FinishPlus*	46211XXX

This product is not available in brushed AXOR FinishPlus surfaces.

3-hole rim mounted bath mixer – diamond cut

Features of all variants

/ consists of: 3-hole rim mounted single lever bath mixer, baton hand shower, shower holder
/ 2 functions
/ projection: 210 mm
/ spray type mixer: normal spray
/ spray type hand shower: Rain, MonoRain
/ maximum pull-out length of hand shower: 1,45 m
/ maximum flow rate at 3 bar: 20 l/min
/ flow rate for bath spout at 3 bar: 20 l/min
/ flow rate of hand shower at 3 bar: 9 l/min
/ ceramic cartridge
/ temperature limitation adjustable
/ non-return valve
/ suitable for continous flow water heaters
/ connection dimension: DN15
/ connection type: basic set
/ installation on bath rim
/ min. operating pressure: 1 bar
/ max. operating pressure: 10 bar
/ no additional maintenance opening required

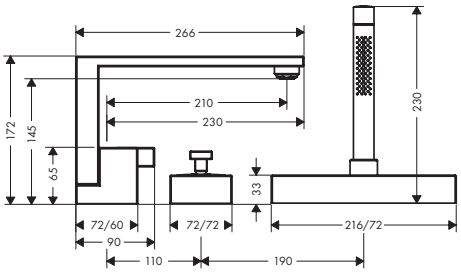

Technologies

Quick clean

AirPower

Spray types

Rain

Mono Rain

Projection (mm)	Structure element	Finish	Code no.
210	diamond cut	Chrome	46431000
		AXOR FinishPlus*	46431XXX

This product is not available in brushed AXOR FinishPlus surfaces.

Required parts:	Code no.
Basic set for 3-hole rim mounted single lever bath mixer	15487180

*AXOR FinishPlus: For further AXOR FinishPlus surfaces please see the AXOR FinishPlus overview on page 44.

Rim mounted bath set

Features of all variants

/ consists of: baton hand shower, escutcheon, hose box, shower hose
/ suitable for installation on bath rim
/ sBox for quiet, smooth and protected hose guidance
/ connection thread: G ½
/ connection dimension: DN15
/ no additional maintenance opening required
/ maximum pull-out length of hand shower: 1,45 m
/ removable for service at any time
/ maximum flow rate at 3 bar: 14,5 l/min
/ spray type hand shower: Rain, MonoRain

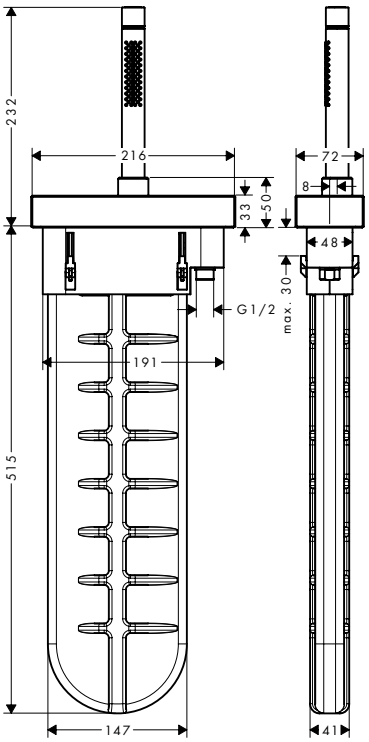

Spray types

Max. flow rate at 3 bar (l/min)	Min. flow pressure (bar)	Finish	Code no.
14.5	1	Chrome	46470000
		AXOR FinishPlus*	46470XXX

This product is not available in brushed AXOR FinishPlus surfaces.

Required parts:	Code no.
sBox Rim and tile mounted bath basic set	15490180

Optional parts:	Code no.
sBox Installation plate for tile mounted installation	28014000
sBox Mounting angle set for installation plate for tile mounted installation	28011000

Measurements within scale drawings are in mm.
Technical specifications and units of measure are subject to change.

Single lever bath mixer floor-standing – diamond cut

Features of all variants

/ consists of: single lever bath mixer floor standing, baton hand shower, shower holder, shower hose
/ 2 functions
/ projection: 255 mm
/ spray type mixer: normal spray
/ spray type hand shower: Rain, MonoRain
/ maximum flow rate at 3 bar: 23 l/min
/ flow rate for bath spout at 3 bar: 23 l/min
/ flow rate of hand shower at 3 bar: 13 l/min
/ ceramic cartridge
/ temperature limitation adjustable
/ diverter with automatic resetting
/ non-return valve
/ suitable for continous flow water heaters
/ connection dimension: DN15
/ connection type: basic set
/ deck mounted
/ min. operating pressure: 1 bar
/ max. operating pressure: 10 bar

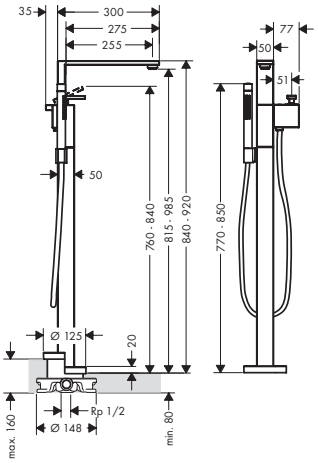

Technologies

Spray types

Projection (mm)	Structure element	Finish	Code no.
255	diamond cut	Chrome	46441000
		AXOR FinishPlus*	46441XXX

This product is not available in brushed AXOR FinishPlus surfaces.

Required parts:		Code no.
	Basic set for mixers floor-standing	10452180

Optional parts:		Code no.
	Sealing foil for basic set bath mixer floor-standing	96441000
	AXOR Starck Extension 60 mm for pipe	97686000

*AXOR FinishPlus: For further AXOR FinishPlus surfaces please see the AXOR FinishPlus overview on page 44.

Bath spout diamond cut

Features of all variants

/ 1 function
/ projection: 190 mm
/ wall-mounted
/ maximum flow rate at 3 bar: 23 l/min
/ connection dimension: G ½
/ spray type: normal spray

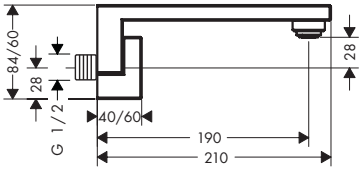

Technologies

Projection (mm)	Structure element	Finish	Code no.
190	diamond cut	Chrome	46411000
		AXOR FinishPlus*	46411XXX

This product is not available in brushed AXOR FinishPlus surfaces.

Porter unit with baton hand shower 2jet and shower hose – diamond cut

Features of all variants

/ consists of: baton hand shower, porter unit, shower holder, shower hose
/ shower head size: 68 x 24 mm
/ spray type: Rain, MonoRain
/ QuickClean: Limescale deposits can simply be rubbed off with your finger
/ maximum flow rate at 3 bar: 16,2 l/min
/ minimum flow pressure: 1 bar
/ operating pressure: min. 1 bar/max. 10 bar
/ shower hose with cylindrical nut on both ends
/ shower hose length: 1250 mm
/ with non-return valve
/ integrated support function
/ wall mounting: screw fastening

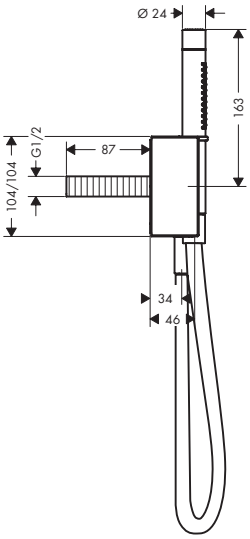

Technologies

Spray types

Number of sprays	Spray types	Max. flow rate at 3 bar (l/min)	Min. flow pressure (bar)	Structure element	Finish	Code no.
2	Rain, MonoRain	16.2	1	diamond cut	Chrome	46521000
					AXOR FinishPlus*	46521XXX

This product is not available in brushed AXOR FinishPlus surfaces.

Measurements within scale drawings are in mm.
Technical specifications and units of measure are subject to change.

Thermostatic modules Select for concealed installation

Features of all variants

/ consists of: thermostatic module, shower holder, baton hand shower, shower hose
/ simultaneous use of several outlets
/ depending on volume flow and installation situation approx. 50% flow rate reduction and integrated shut off function
/ thermostat cartridge, Start/stop valve to operate the functions
/ flow rate of hand shower at 3 bar: 13 l/min
/ min. operating pressure: 1 bar
/ max. operating pressure: 10 bar
/ Safety stop at 40 °C
/ temperature limitation adjustable
/ for shower hoses with a cylindrical nut
/ connection type: basic set

2 functions

3 functions

4 functions

5 functions

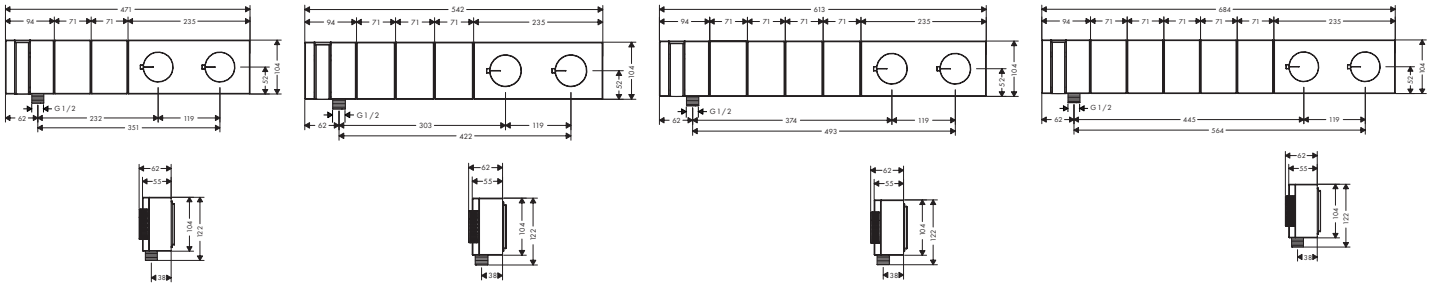

Special feature

Technologies

Overview variants

Number of functions	Max. flow rate at 3 bar (l/min)	Structure element	Finish	Code no.
2 functions	35	diamond cut	Chrome	46701000
			AXOR FinishPlus*	46701XXX
3 functions	38	diamond cut	Chrome	46711000
			AXOR FinishPlus*	46711XXX
4 functions	39	diamond cut	Chrome	46721000
			AXOR FinishPlus*	46721XXX
5 functions	38	diamond cut	Chrome	46731000
			AXOR FinishPlus*	46731XXX

This product is not available in brushed AXOR FinishPlus surfaces.

Required parts:	For	Code no.
Basic set for thermostatic module Select for 2 functions	46701XXX	18310180
Basic set for thermostatic module Select for 3 functions	46711XXX	18311180
Basic set for thermostatic module Select for 4 functions	46721XXX	18312180
Basic set for thermostatic module Select for 5 functions	46731XXX	18313180

*AXOR FinishPlus: For further AXOR FinishPlus surfaces please see the AXOR FinishPlus overview on page 44.

Thermostat HighFlow for concealed installation – diamond cut

Features of all variants

/ 1 function
/ thermostat cartridge
/ flow rate upper outlet: 42 l/min
/ flow rate lower outlet: 42 l/min
/ maximum flow rate at 3 bar: 59 l/min
/ min. operating pressure: 1 bar
/ max. operating pressure: 10 bar
/ Safety stop at 40 °C
/ temperature limitation adjustable
/ non-return valve
/ with silencer

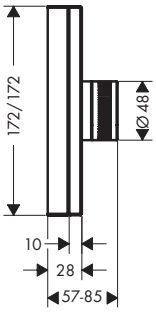

Technologies

Thermostat

Structure element	Finish	Code no.
diamond cut	Chrome	46741000
	AXOR FinishPlus*	46741XXX

This product is not available in brushed AXOR FinishPlus surfaces.

Required parts (choose one):			Code no.
Option 1		AXOR iBox universal 2 Basic set	01400180
	+	Adapter plate for iBox universal 2	13588000
Option 2		AXOR iBox universal Basic set	01700180

Thermostat for concealed installation with shut-off valve – diamond cut

Features of all variants

/ 1 function
/ thermostat cartridge, ceramic valves 90°
/ maximum flow rate at 3 bar: 26 l/min
/ min. operating pressure: 1 bar
/ max. operating pressure: 10 bar
/ Safety stop at 40 °C
/ temperature limitation adjustable
/ non-return valve
/ with silencer
/ connection type: basic set

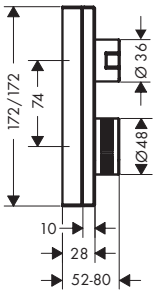

Special feature

Water Flow Control

Technologies

Thermostat

Structure element	Finish	Code no.
diamond cut	Chrome	46751000
	AXOR FinishPlus*	46751XXX

This product is not available in brushed AXOR FinishPlus surfaces.

Required parts (choose one):			Code no.
Option 1		AXOR iBox universal 2 Basic set	01400180
	+	Adapter plate for iBox universal 2	13588000
Option 2		AXOR iBox universal Basic set	01700180

Measurements within scale drawings are in mm.
Technical specifications and units of measure are subject to change.

Thermostat for concealed installation with shut-off/ diverter valve – diamond cut

Features of all variants

/ 2 functions
/ thermostat cartridge
/ flow rate upper outlet: 25 l/min
/ flow rate lower outlet: 29 l/min
/ maximum flow rate at 3 bar: 29 l/min
/ min. operating pressure: 1 bar
/ max. operating pressure: 10 bar
/ Safety stop at 40 °C
/ temperature limitation adjustable
/ non-return valve
/ with silencer
/ connection type: basic set

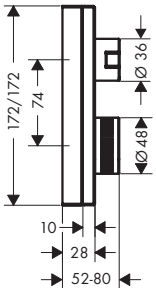

Special feature

Technologies

	Structure element	Finish	Code no.
	diamond cut	Chrome	46761000
		AXOR FinishPlus*	46761XXX

This product is not available in brushed AXOR FinishPlus surfaces.

Required parts (choose one):			Code no.
Option 1		AXOR iBox universal 2 Basic set	01400180
+		Adapter plate for iBox universal 2	13588000
Option 2		AXOR iBox universal Basic set	01700180

Shut-off valve for concealed installation – diamond cut

Features of all variants

/ connection type: DN15/DN20
/ 1 function
/ noise class: II

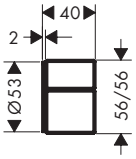

	Structure element	Finish	Code no.
	diamond cut	Chrome	46771000
		AXOR FinishPlus*	46771XXX

This product is not available in brushed AXOR FinishPlus surfaces.

Required parts:		Code no.
	Basic set 52 l/min for shut-off valve for concealed installation spindle	16973180
	Basic set 40 l/min for shut-off valve for concealed installation ceramic	16974180
	Basic set 130 l/min for shut-off valve for concealed installation spindle	16970180

Optional parts:		Code no.
	Extension set 25 mm for shut-off/ diverter valve Trio-/ Quattro	92990000

*AXOR FinishPlus: For further AXOR FinishPlus surfaces please see the AXOR FinishPlus overview on page 44.

Possible product combinations

Showers

AXOR ShowerComposition
Shower module 250/250 2jet with shoulder shower

#12594XXX

page 397

AXOR ShowerComposition
Shower panel with thermostat, overhead shower 110/220 1jet and shoulder shower

#12595XXX

page 398

AXOR ShowerSolutions
ShowerHeaven 1200/300 4jet without lighting

#10637XXX

page 415

Shower controls

AXOR ShowerSelect ID
Thermostat for concealed installation square for 2 functions

#36752XXX

page 519

Further complementary products

AXOR Universal Rectangular
Bath towel rail 600 mm

#42661XXX

page 554

AXOR Suite Basins & Bathtub
Wash bowl 400 without tap hole and overflow

#42001XXX

page 602

AXOR Drain
Finish set shower drain 700

#42520XXX

page 632

Basin

Bidet

Bath

Plates

Complementary products

AXOR MYEDITION

DESIGN
–
PHOENIX

WIENER
SEIFE

"AXOR MyEdition offers perfectly coordinated multisensory experiences."

ANDREAS DIEFENBACH, PHOENIX

AXOR MyEdition

A personal statement

With its monolithic, linear design, AXOR MyEdition provides you with a stage for self-expression. A wide selection of cover plates made of exclusive materials leaves room for your own creativity. The collection responds to a human desire to have something unique, to stand out from the crowd and to move in new directions.

Design: PHOENIX

Characteristic design feature:

Monolith: The distinctive rectangle, due to its weight and size, is monolithic.

The designer's idea:

A stage for your own creativity: Numerous options for individualization offer customers a platform for self-realization.

Special collection highlights:

/ With the neutral carrier plate, AXOR MyEdition lets you create a customized design using the custom material plate

/ A new dimension of individualization with carefully selected natural materials and exclusive surface finishes

/ A new look and feel with the use of natural materials such as glass, metal, wood, marble and leather, each with its own unique surface structure

/ A sensual contrast to linear design: Innovative water design with the velvety soft PowderRain spray mode, available for the first time on a wash basin mixer

/ Isolated water conduction: Prevents direct water contact with the body of the mixer

/ Integration or contrast: The perfect complement to the interior design or a statement in the bathroom

→ Learn more about AXOR MyEdition: axor-design.com

An avant-garde concept and an ingenious connection

A metal body with a chrome finish or one of the AXOR FinishPlus PVD surface. Crowned with a fascinating cover plate: With its exclusive material portfolio, AXOR Signature opens up groundbreaking potential. Metal, mirror glass, black glass and refined natural materials such as wood, marble and leather offer more appeal and new sensory experiences. AXOR MyEdition is the first.

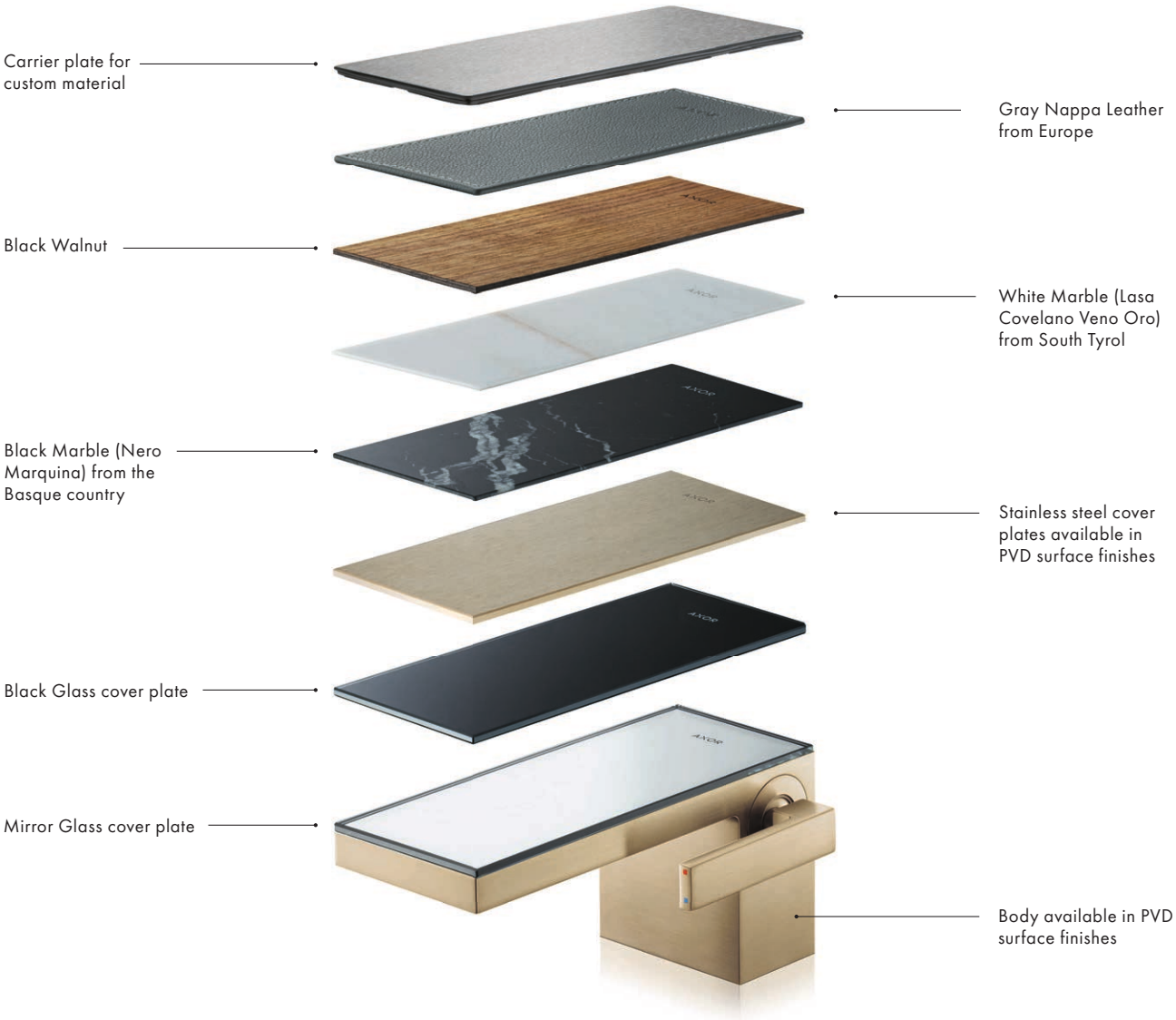

The following variants are available as standard for all nine AXOR MyEdition products with their own item numbers:

/ PVD surface finishes (body) / Mirror Glass cover plate) (-000)
/ Brushed Bronze / Black Glass (-600)

In addition to the standard variants, the products can be configured individually and ordered with separate item numbers for body and cover plate.

Natural materials for the bathroom– each cover plate is one of a kind

The refined materials reveal themselves in unique ways in AXOR MyEdition cover plates. Each design version is developed in an intensive process, made with precision craftsmanship and tested under the harshest conditions for mixer use in internal fatigue testing. The result is a perfect whole.

The elegant walnut veneer provides a fascinating example. Delicate sheets of wood are used to produce sturdy components with an attractive surface pattern, strikingly brown in color with a striped grain.

The white Lasa marble from South Tyrol is characterized by its fine, gold veins. The cover plates are shaved from the marble block in extremely thin layers, which are meticulously processed to produce stone veneer with a perfect surface feel. Its dark counterpart, Nero Marquina, comes from quarries in the Basque Country of northern Spain. Deep black, with a distinctive white veining, it evokes the ultimate in elegance. Just as meticulous is the selection of nappa leather of European origin. Due to precision processing, it is especially resilient, so it is also suitable for use in wet areas.

Each cover plate is one of a kind. This makes each AXOR MyEdition mixer into an unmistakable original. For the ultimate in individualization for wash basins and bathtubs.

To ensure the durability of the cover plates, individual cleaning recommendations are enclosed for each material.

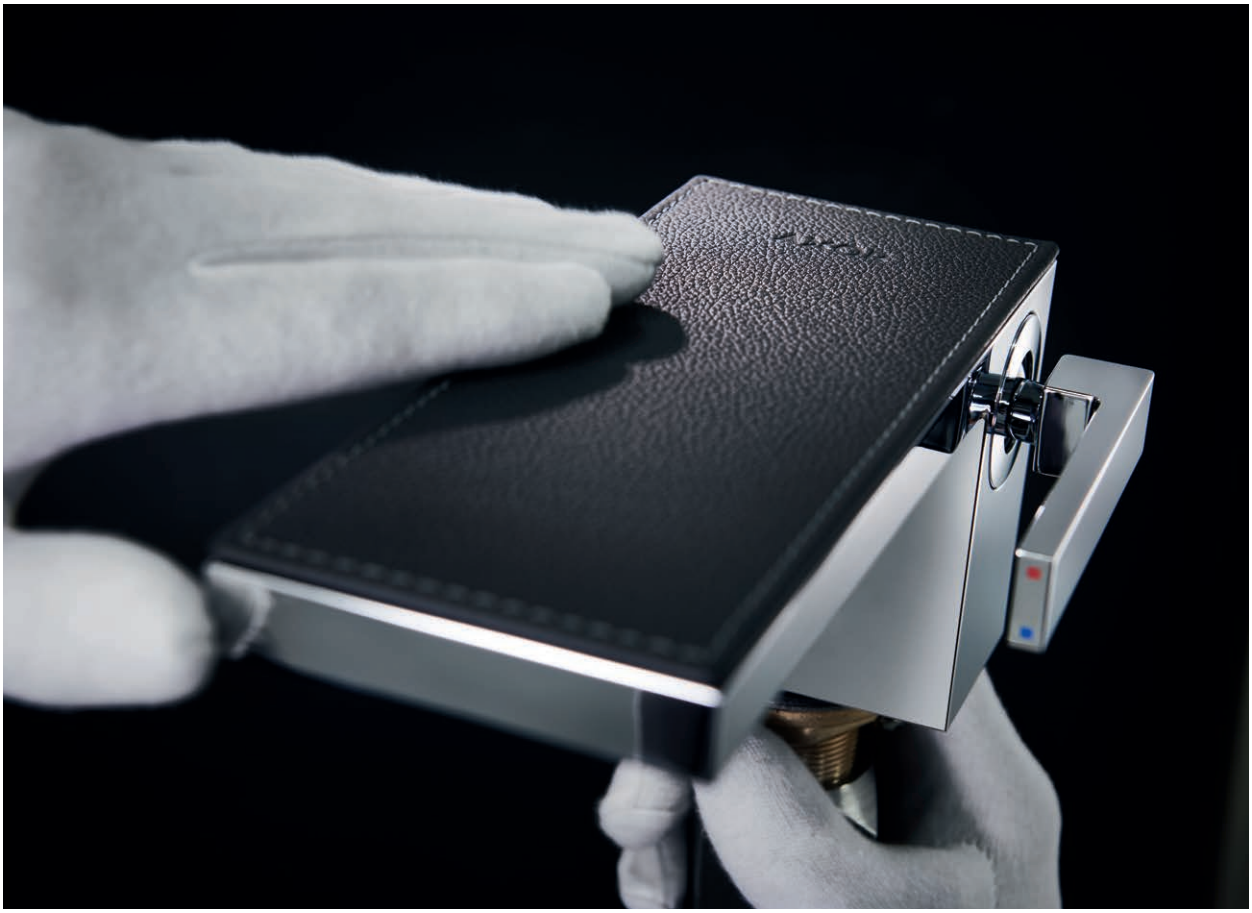

Consistent design language– for mixer and spray

New spray formers:
The shape of the water spray is derived from the product design. In this case, a rectangular spray former was developed which, in a fixed position, is equipped with PowderRain spray mode as well as QuickClean function for easily removing calcium deposits.

PowderRain spray mode:
AXOR MyEdition is the first collection with the PowderRain spray mode. Satiny smooth droplets emerge from 170 of the finest spray nozzles for a sensual, soft and luxuriant spray experience.

Isolated water conduction:
A separated water conduction is integrated into the metal basic set which separates the conduit from the body so it remains free of lead and nickel concentrations.

Materials
The cover plate, a variable element on the mixer, can be individualized as desired, e.g. with innovative materials such as leather, marble or wood

Independent elements
The fine line separating body and cover plate has the appearance of a shadow gap. This separation between the independent elements is what makes individualization possible

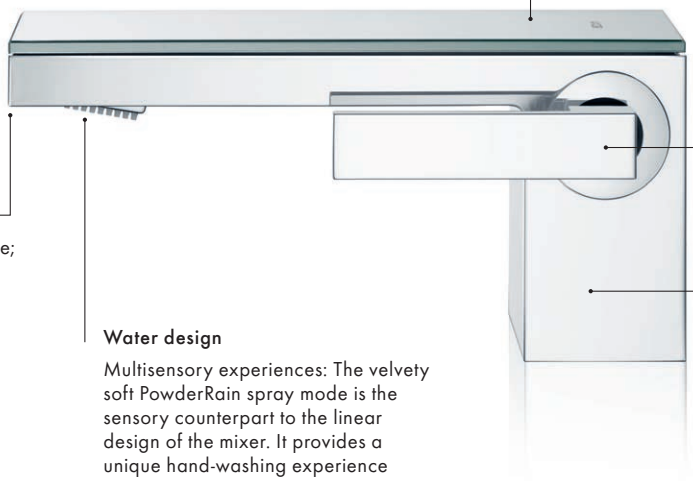

Ergonomics
The M25LS cartridge enables side handle placement for ergonomic use

Monolith
Clear, angular design language; solid form

Individualization
The body is the constant element of the mixer and, together with the free dom of choice in selecting monochromatic or combined AXOR FinishPlus PVD surfaces, it forms the basis for maximum individualization

Water design
Multisensory experiences: The velvety soft PowderRain spray mode is the sensory counterpart to the linear design of the mixer. It provides a unique hand-washing experience

Available as standard for AXOR MyEdition are the variants Chrome/Mirror Glass (-000) and Chrome/Black Glass (-600). Glass is particularly hygienic, sturdy and resistant to harsh cleaning agents.

The cover plate in natural Black Walnut has very fine dark brown coloring in various shades. In combination with the AXOR FinishPlus surface Matt Black, it's a real eye-catcher.

The brilliantly white Lasa Covelano Vena Oro Marble is fascinating with its fine, golden veining. It is sourced from a quarry in the Jenn Cliff Massif, the highest quarry in Europe, at an elevation of more than 2,220 meters.

The black Nero Marquina Marble is an exquisite, black limestone with distinctive, white quartz veining. Because it can be polished, it is called marble. The white quartz veins were formed in the later stages of the rock's development.

European Nappa Leather brings a sense of coziness to the bathroom. The gray leather has a fine, natural structure and a soft, smooth feel.

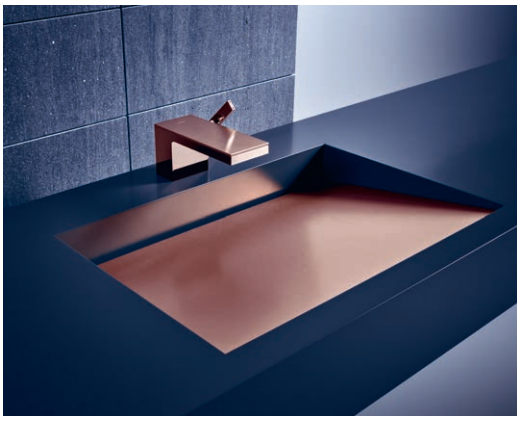

AXOR FinishPlus surfaces bring color into the bathroom. In addition to color-in-color combinations with polished or hand-brushed variants, bi-color variants can also be realized simply by exchanging the body and top.

Individualization for the bathtub

The individualization concept of AXOR MyEdition can also be applied to bathtubs.

The black Nero Marquina Marble cover plate with its striking white veining is a distinctive highlight on the four-hole rim-mounted mixer.

Especially impressive as well is the white Lasa Covelano Vena Oro Marble cover plate in combination with the floor-standing bathtub mixer.

AXOR offers a modular cover plate to realize different AXOR MyEdition faucet, each adorned with its customer's own, personally chosen material. In this way, a personal statement becomes a meaningful narrative, symbolizing a certain element, a special mood, a remembered landscape, a lasting image. The ideas materialized in the mixer's cover plate and surface finish reflect the texture of one's own identity.

COLLECTION OVERVIEW AND COMBINATION OPTIONS

PRODUCT COVER PLATES

PRODUCT BODY			Mirror Glass			Black Glass			Chrome			Matt Black		
			Plate 200	Plate 245	Plate 117	Plate 200	Plate 245	Plate 117	Plate 200	Plate 245	Plate 117	Plate 200	Plate 245	Plate 117
	Single lever basin mixer 70	Standard products Chrome, Matt Black	47010000			47010600 47010670								
	Single lever basin mixer 70 without plate	Chrome	47012000 47900000			47012000 47900600			47012000 47903000			47012000 47903000		
		15 PVD surface finishes, Matt Black	47012XXX 47900000			47012XXX 47900600			47012XXX 47903000			47012XXX 47903000		
	Single lever basin mixer 110	Standard products Chrome, Matt Black	47030000			47030600 47030670								
	Single lever basin mixer 110 without plate	Chrome	47032000 47900000			47032000 47900600			47032000 47903000			47032000 47903000		
		15 PVD surface finishes, Matt Black	47032XXX 47900000			47032XXX 47900600			47032XXX 47903000			47032XXX 47903000		
	Single lever basin mixer 230	Standard products Chrome, Matt Black		47020000			47020600 47020670							
	Single lever basin mixer 230 without plate	Chrome		47022000 47901000			47022000 47901600			47022000 47904000			47022000 47904670	
		15 PVD surface finishes, Matt Black		47022XXX 47901000			47022XXX 47901600			47022XXX 47904000			47022XXX 47904670	
	3-hole basin mixer 70	Standard products Chrome, Matt Black	47050000			47050600 47050670								
	3-hole basin mixer 70 without plate	Chrome	47052000 47900000			47052000 47900600			47052000 47903000				47052000 47904670	
		15 PVD surface finishes, Matt Black	47052XXX 47900000			47052XXX 47900600			47052XXX 47903000				47052XXX 47904670	
	3-hole basin mixer 110	Standard products Chrome, Matt Black	47070000			47070600 47070670								
	3-hole basin mixer 110 without plate	Chrome	47072000 47900000			47072000 47900600			47072000 47903000				47072000 47904670	
		15 PVD surface finishes, Matt Black	47072XXX 47900000			47072XXX 47900600			47072XXX 47903000				47072XXX 47904670	
	Single lever basin mixer for concealed installation	Standard products Chrome, Matt Black		47060600 47060670			47070600 47070670							
	Single lever basin mixer for concealed installation without plate	Chrome		47062000 47901000			47062000 47901600			47062000 47904000			47062000 47904670	
		15 PVD surface finishes, Matt Black		47062XXX 47901000			47062XXX 47901600			47062XXX 47904000			47062XXX 47904670	
	3-hole basin mixer for concealed installation	Standard products Chrome, Matt Black		47080000			47080600 47080670							
	3-hole basin mixer for concealed installation without plate	Chrome		47082000 47901000			47082000 47901600			47082000 47904000			47082000 47904670	
		15 PVD surface finishes, Matt Black		47082XXX 47901600			47082XXX 47901600			47082XXX 47904000			47082XXX 47904670	
	Single lever basin mixer floor-standing	Standard products Chrome, Matt Black		47040000			47040600 47040670							
	Single lever basin mixer floor-standing without plate	Chrome		47042000 47901000			47042000 47901600			47042000 47904000			47042000 47904670	
		15 PVD surface finishes, Matt Black		47042XXX 47901000			47042XXX 47901600			47042XXX 47904000			47042XXX 47904670	
	Single lever bidet mixer	Standard products Chrome, Matt Black			47210000			47210600 47210670						
	Single lever bidet mixer without plate	Chrome			47212000 47902000			47212000 47902600			47212000 47905000			47212000 47905670
		15 PVD surface finishes, Matt Black			47212XXX 47902000			47212XXX 47902600			47212XXX 47905000			47212XXX 47905670
	4-hole rim mounted bath mixer	Standard products Chrome, Matt Black	47430600 47430670			47070600 47070670								
	4-hole rim mounted bath mixer without plate	Chrome	47432000 47900000			47432000 47900600			47432000 47903000			47432000 47903670		
		15 PVD surface finishes, Matt Black	47432XXX 47900000			47432XXX 47900600			47432XXX 47903000			47432XXX 47903670		
	Single lever bath mixer floor-standing	Standard products Chrome, Matt Black		47440000			47440600 47440670							
	Single lever bath mixer floor-standing without plate	Chrome		47442000 47901000			47442000 47901600			47442000 47904000			47442000 47904670	
		15 PVD surface finishes, Matt Black		47442XXX 47901000			47442XXX 47901600			47442XXX 47904000			47442XXX 47904670	
	Bath spout	Standard products Chrome, Matt Black	47410000			47410600 47410670								
	Bath spout without plate	Chrome	47412000 47900000			47412000 47900600			47412000 47903000			47412000 47903670		
		15 PVD surface finishes, Matt Black	47412XXX 47900000			47412XXX 47900600			47412XXX 47903000			47412XXX 47903670		

*For exact positioning of the individual material on the AXOR MyEdition support plate, the corresponding template is required as an optional accessory. AXOR MyEdition products are available with surfaces in Chrome/Mirror Glass -000, Chrome/Black Glass -600 as well as in AXOR FinishPlus -xxx surfaces.

15 PVD surface finishes			Wood: Black Walnut			White Marble: Lasa Covelano Vena Oro			Black Marble: Nero Marquina			Leather: Gray Nappa Leather			Carrier plate for custom material		
Plate 200	Plate 245	Plate 117	Plate 200	Plate 245	Plate 117	Plate 200	Plate 245	Plate 117	Plate 200	Plate 245	Plate 117	Plate 200	Plate 245	Plate 117	Plate 200	Plate 245	Plate 117
47012000 47903XXX			47012000 47906000			47012000 47909000			47012000 47913000			47012000 47916000			47012000 47921000*		
47012XXX 47903XXX			47012XXX 47906000			47012XXX 47909000			47012XXX 47913000			47012XXX 47916000			47012XXX 47921000*		
47032000 47903XXX			47032000 47906000			47032000 47909000			47032000 47913000			47032000 47916000			47032000 47921000*		
47032XXX 47903XXX			47032XXX 47906000			47032XXX 47909000			47032XXX 47913000			47032XXX 47916000			47032XXX 47921000*		
	47022000 47904XXX			47022000 47907000			47022000 47910000			47022000 47914000			47022000 47917000			47022000 47922000*	
	47022XXX 47904XXX			47022XXX 47907000			47022XXX 47910000			47022XXX 47914000			47022XXX 47917000			47022XXX 47922000*	
47052000 47903XXX			47052000 47906000			47052000 47909000			47052000 47913000			47052000 47916000			47052000 47921000*		
47052XXX 47903XXX			47052XXX 47906000			47052XXX 47909000			47052XXX 47913000			47052XXX 47916000			47052XXX 47921000*		
47072000 47903XXX			47072000 47906000			47072000 47909000			47072000 47913000			47072000 47916000			47072000 47921000*		
47072XXX 47903XXX			47072XXX 47906000			47072XXX 47909000			47072XXX 47913000			47072XXX 47916000			47072XXX 47921000*		
	47062000 47904XXX			47062000 47907000			47062000 47910000			47062000 47914000			47062000 47917000			47062000 47922000*	
	47062XXX 47904XXX			47062XXX 47907000			47062XXX 47910000			47062XXX 47914000			47062XXX 47917000			47062XXX 47922000*	
	47082000 47904XXX			47082000 47907000			47082000 47910000			47082000 47914000			47082000 47917000			47082000 47922000*	
	47082XXX 47904XXX			47082XXX 47907000			47082XXX 47910000			47082XXX 47914000			47082XXX 47917000			47082xxx 47922000	
	47042000 47904XXX			47042000 47907000			47042000 47910000			47042000 47914000			47042000 47917000			47042000 47922000*	
	47042XXX 47904XXX			47042XXX 47907000			47042XXX 47910000			47042XXX 47914000			47042XXX 47917000			47042XXX 47922000*	
		47212000 47905XXX			47212000 47908000			47212000 47911000			47212000 47915000			47212000 47918000			47212000 47923000*
		47212XXX 47905XXX			47212XXX 47908000			47212XXX 47911000			47212XXX 47915000			47212XXX 47918000			47212XXX 47923000*
47432000 47903XXX			47432000 47906000			47432000 47909000			47432000 47913000			47432000 47916000			47432000 47921000*		
47432XXX 47903XXX			47432XXX 47906000			47432XXX 47909000			47432XXX 47913000			47432XXX 47916000			47432XXX 47921000*		
	47442000 47904XXX			47442000 47907000			47442000 47910000			47442000 47914000			47442000 47917000			47442000 47922000*	
	47442XXX 47904XXX			47442XXX 47907000			47442XXX 47910000			47442XXX 47914000			47442XXX 47917000			47442XXX 47922000*	
47412000 47903XXX			47412000 47906000			47412000 47909000			47412000 47913000			47412000 47916000			47412000 47921000*		
47412XXX 47903XXX			47412XXX 47906000			47412XXX 47909000			47412XXX 47913000			47412XXX 47916000			47412XXX 47921000*		

Single lever basin mixers

Features of all variants

/ handle variant: lever handle
/ spray type: PowderRain
/ maximum flow rate at 3 bar: 5 l/min
/ ceramic cartridge
/ temperature limitation adjustable
/ with isolated water conduction – without contact with nickel and lead
/ suitable for continuous flow water heaters
/ push-open waste set G 1¼
/ connection type: G ⅜ hose connections
/ connection dimension: DN15
/ EU taxonomy: max. 6 l/min – Substantial Contribution (SC) possible

70 with plate

110 with plate

230 without plate

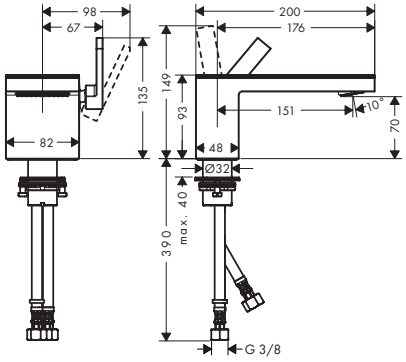

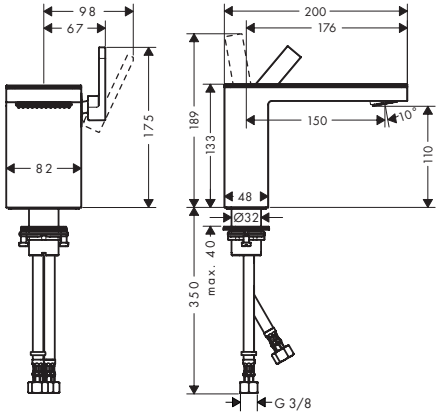

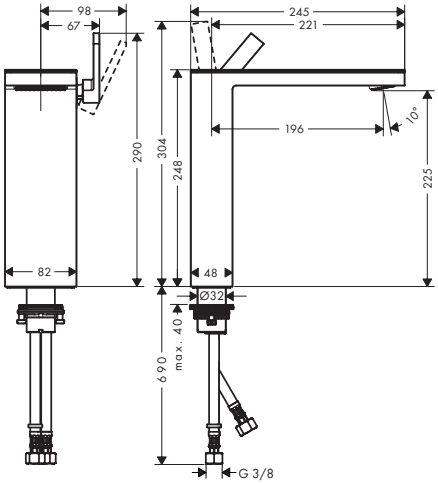

Special feature

Technologies

Overview variants

ComfortZone	Projection (mm)	Spout height (mm)	For wash bowls	Cover	Finish	Code no.
70	151	70	–	with plate	Chrome/Mirror Glass	47010000
					Chrome/Black Glass	47010600
					Matt Black/Black Glass	47010670
70	151	70	–	without plate	Chrome	47012000
					Brushed Bronze	47012140
					Brushed Black Chrome	47012340
					Matt Black	47012670
					AXOR FinishPlus*	47012XXX
110	150	110	–	with plate	Chrome/Mirror Glass	47030000
					Chrome/Black Glass	47030600
					Matt Black/Black Glass	47030670
110	150	110	–	without plate	Chrome	47032000
					Brushed Bronze	47032140
					Brushed Black Chrome	47032340
					Matt Black	47032670
					AXOR FinishPlus*	47032XXX

Measurements within scale drawings are in mm.
Technical specifications and units of measure are subject to change.

Single lever basin mixers

Overview variants

ComfortZone	Projection (mm)	Spout height (mm)	For wash bowls	Cover	Finish	Code no.
230	196	225	■	with plate	Chrome/Mirror Glass	47020000
					Chrome/Black Glass	47020600
					Matt Black/Black Glass	47020670
230	196	225	■	without plate	Chrome	47022000
					Brushed Bronze	47022140
					Brushed Black Chrome	47022340
					Matt Black	47022670
					AXOR FinishPlus*	47022XXX

Single lever basin mixers for concealed installation wall-mounted

Features of all variants

/ projection: 221 mm
/ spout height: 82 mm
/ handle variant: lever handle
/ spray type: PowderRain
/ maximum flow rate at 3 bar: 5 l/min
/ ceramic cartridge
/ temperature limitation adjustable
/ with isolated water conduction – without contact with nickel and lead
/ suitable for continuous flow water heaters
/ non-closing waste set
/ connection type: basic set
/ connection dimension: DN15
/ handle can be positioned on the right or left, depending on the basic set installation
/ EU taxonomy: max. 6 l/min – Substantial Contribution (SC) possible

221 with plate

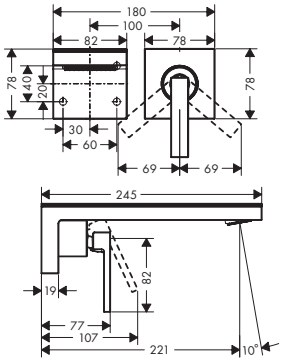

221 without plate

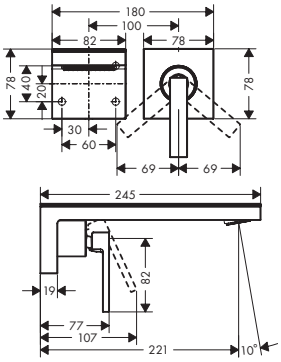

Special feature

EcoSmart

Technologies

Quick Clean

Overview variants

Projection (mm)	Cover	Finish	Code no.
221	with plate	Chrome/Mirror Glass	47060000
		Chrome/Black Glass	47060600
		Matt Black/Black Glass	47060670
221	without plate	Chrome	47062000
		Brushed Bronze	47062140
		Brushed Black Chrome	47062340
		Matt Black	47062670
		AXOR FinishPlus*	47062XXX

Required parts:		Code no.
	Basic set for single lever basin mixer for concealed installation wall-mounted	13623180

Optional parts:		Code no.
	Extension set 25 mm for single lever basin mixer wall-mounted	13586000

*AXOR FinishPlus: For further AXOR FinishPlus surfaces please see the AXOR FinishPlus overview on page 44.

3-hole basin mixers

Features of all variants

/ handle variant: lever handle
/ spray type: PowderRain
/ maximum flow rate at 3 bar: 5 l/min
/ ceramic valves hot/cold 90°
/ with isolated water conduction – without contact with nickel and lead
/ suitable for continuous flow water heaters
/ push-open waste set G 1¼
/ connection type: G ⅜ hose connections
/ connection dimension: DN15
/ EU taxonomy: max. 6 l/min – Substantial Contribution (SC) possible

70 with plate

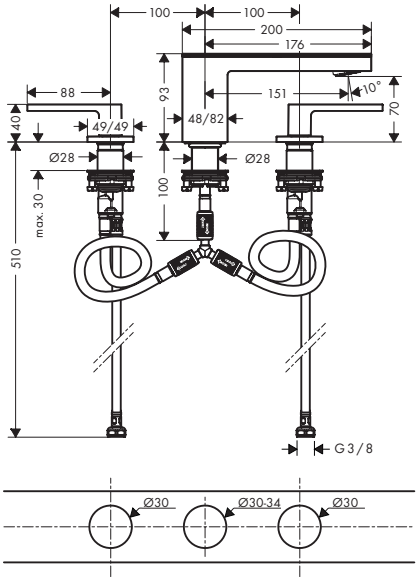

70 without plate

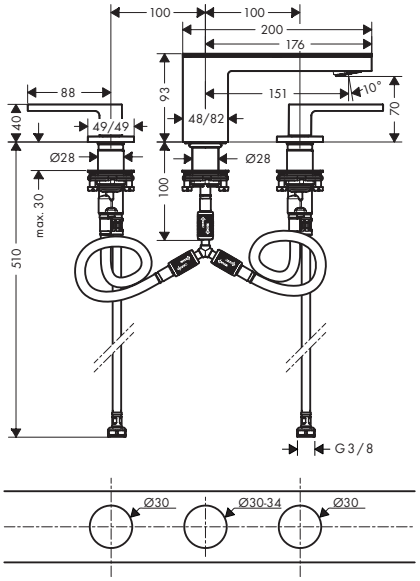

110 with plate

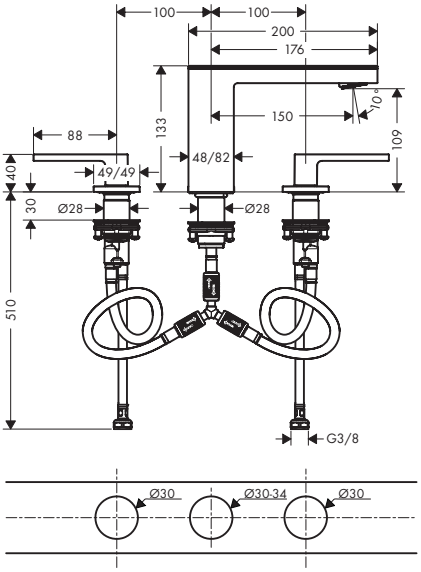

Special feature

Technologies

Overview variants

ComfortZone	Projection (mm)	Spout height (mm)	Cover	Finish	Code no.
70	151	70	with plate	Chrome/Mirror Glass	47050000
				Chrome/Black Glass	47050600
				Matt Black/Black Glass	47050670
70	151	70	without plate	Chrome	47052000
				Brushed Bronze	47052140
				Brushed Black Chrome	47052340
				Matt Black	47052670
				AXOR FinishPlus*	47052XXX
110	150	109	with plate	Chrome/Mirror Glass	47070000
				Chrome/Black Glass	47070600
				Matt Black/Black Glass	47070670
110	150	109	without plate	Chrome	47072000
				Brushed Bronze	47072140
				Brushed Black Chrome	47072340
				Matt Black	47072670
				AXOR FinishPlus*	47072XXX

Optional parts:		Code no.
	Hose extension set for 3-hole basin mixer	38959000

Measurements within scale drawings are in mm.
Technical specifications and units of measure are subject to change.

3-hole basin mixers for concealed installation wall-mounted

Features of all variants

/ projection: 221 mm
/ handle variant: lever handle
/ spray type: PowderRain
/ maximum flow rate at 3 bar: 5 l/min
/ ceramic valves hot/cold 90°
/ with isolated water conduction – without contact with nickel and lead
/ suitable for continuous flow water heaters
/ non-closing waste set
/ connection type: basic set
/ connection dimension: DN15
/ EU taxonomy: max. 6 l/min – Substantial Contribution (SC) possible

221 with plate

221 without plate

Special feature

Technologies

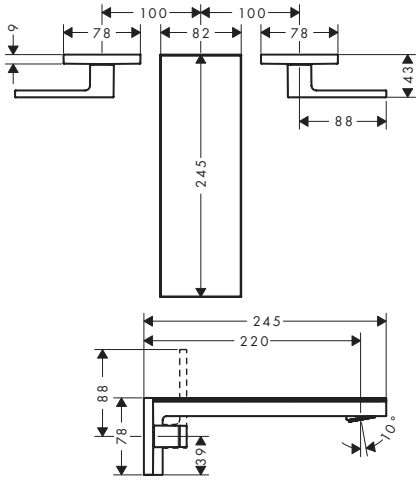

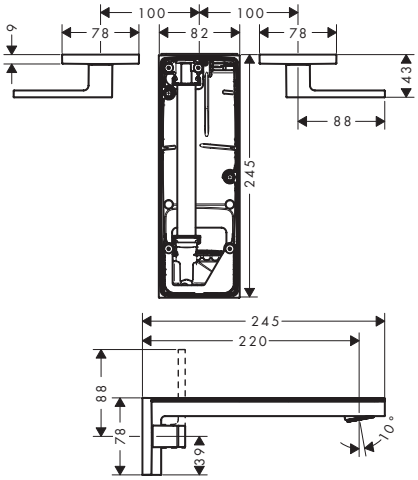

Overview variants

Projection (mm)	Cover	Finish	Code no.
221	with plate	Chrome/Mirror Glass	47080000
		Chrome/Black Glass	47080600
		Matt Black/Black Glass	47080670
221	without plate	Chrome	47082000
		Brushed Bronze	47082140
		Brushed Black Chrome	47082340
		Matt Black	47082670
		AXOR FinishPlus*	47082XXX

Required parts:		Code no.
	Basic set for 3-hole basin mixer for concealed installation wall-mounted	10303180

Optional parts:		Code no.
	Seal	96383000
	AXOR Starck Extension set 25 mm for basic set for 3-hole basin mixer wall-mounted	96259000

*AXOR FinishPlus: For further AXOR FinishPlus surfaces please see the AXOR FinishPlus overview on page 44.

Single lever basin mixers floor-standing

Features of all variants

/ projection: 196 mm
/ spout height: 1158 mm
/ handle variant: lever handle
/ spray type: PowderRain
/ maximum flow rate at 3 bar: 5 l/min
/ ceramic cartridge
/ temperature limitation adjustable
/ with isolated water conduction – without contact with nickel and lead
/ suitable for continuous flow water heaters
/ push-open waste set G 1¼
/ connection type: basic set
/ connection dimension: DN15
/ EU taxonomy: max. 6 l/min – Substantial Contribution (SC) possible

with plate

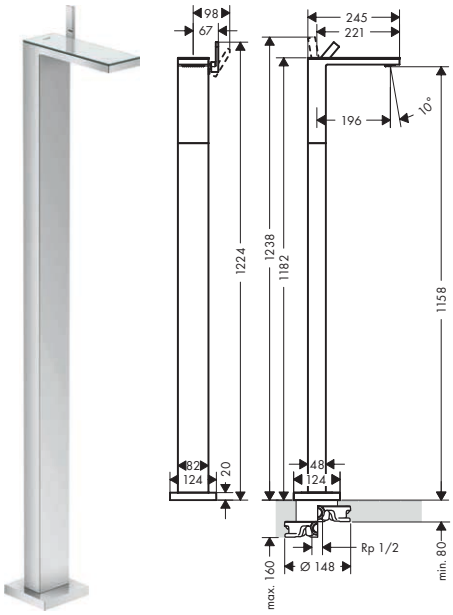

without plate

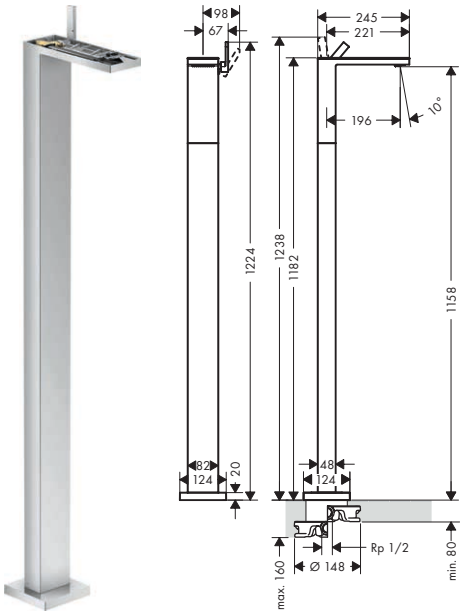

Special feature

EcoSmart

Technologies

Quick Clean

Overview variants

Projection (mm)	Cover	Finish	Code no.
196	with plate	Chrome/Mirror Glass	47040000
		Chrome/Black Glass	47040600
		Matt Black/Black Glass	47040670
196	without plate	Chrome	47042000
		Brushed Bronze	47042140
		Brushed Black Chrome	47042340
		Matt Black	47042670
		AXOR FinishPlus*	47042XXX

Required parts:		Code no.
	Basic set for mixers floor-standing	10452180

Optional parts:		Code no.
	Sealing foil for basic set bath mixer floor-standing	96441000

Measurements within scale drawings are in mm.
Technical specifications and units of measure are subject to change.

Single lever bidet mixers

Features of all variants

/ projection: 121 mm
/ spout height: 83 mm
/ aerator with ball pivot
/ spray type: normal spray
/ maximum flow rate at 3 bar: 5 l/min
/ ceramic cartridge
/ temperature limitation adjustable
/ isolated water conduction – without contact with nickel and lead
/ suitable for continous flow water heaters
/ push-open waste set G 1¼
/ connection type: G ⅜ hose connections
/ connection dimension: DN15
/ EU taxonomy: max. 6 l/min – Substantial Contribution (SC) possible

with plate

without plate

Special feature

EcoSmart

Technologies

AirPower

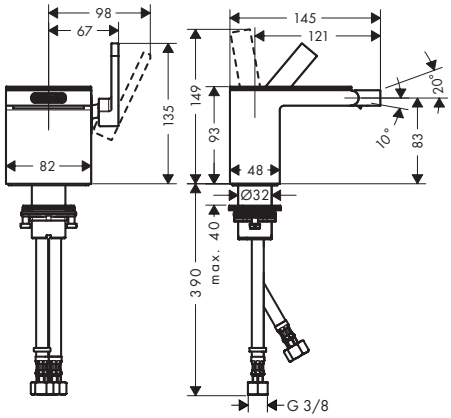

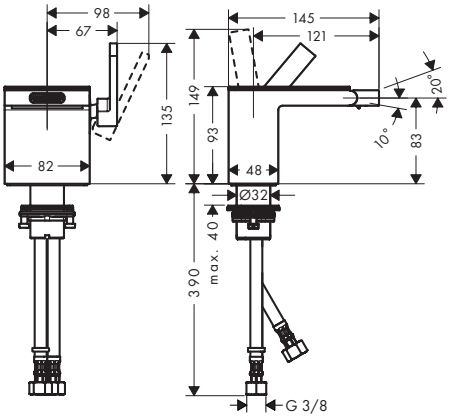

Overview variants

Projection (mm)	Spout height (mm)	Cover	Finish	Code no.
121	83	with plate	Chrome/Mirror Glass	47210000
			Chrome/Black Glass	47210600
			Matt Black/Black Glass	47210670
121	83	without plate	Chrome	47212000
			Brushed Bronze	47212140
			Brushed Black Chrome	47212340
			Matt Black	47212670
			AXOR FinishPlus*	47212XXX

*AXOR FinishPlus: For further AXOR FinishPlus surfaces please see the AXOR FinishPlus overview on page 44.

4-hole rim mounted bath mixers

Features of all variants

/ 2 functions
/ projection: 151 mm
/ spray type mixer: normal spray
/ maximum pull-out length of hand shower: 1.10 m
/ maximum flow rate at 3 bar: 22 l/min
/ flow rate for bath spout at 3 bar: 22 l/min
/ flow rate of hand shower at 3 bar: 16 l/min
/ ceramic valves hot/cold 90°
/ diverter with automatic resetting
/ connection dimension: DN15
/ connection type: basic set
/ installation on bath rim
/ min. operating pressure: 1 bar
/ max. operating pressure: 10 bar
/ spray type hand shower: Rain, MonoRain

with plate

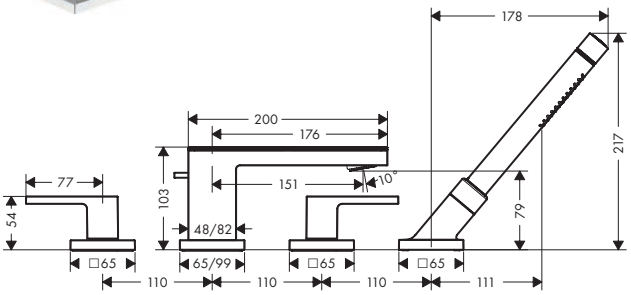

without plate

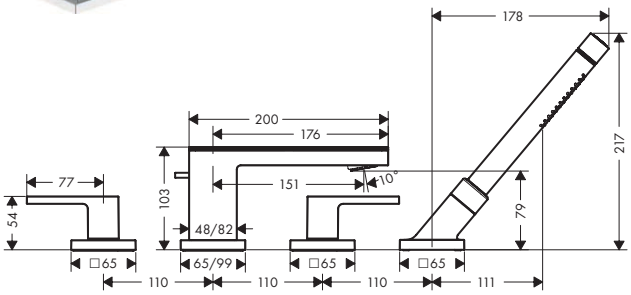

Technologies

Quick Clean

Spray types

Rain
Mono Rain

Overview variants

Projection (mm)	Cover	Finish	Code no.
151	with plate	Chrome/Mirror Glass	47430000
		Chrome/Black Glass	47430600
		Matt Black/Black Glass	47430670
151	without plate	Chrome	47432000
		Brushed Bronze	47432140
		Brushed Black Chrome	47432340
		Matt Black	47432670
		AXOR FinishPlus*	47432XXX

Required parts:		Code no.
	Basic set for 4-hole rim mounted bath mixer	15480180

Optional parts:		Code no.
	Secuflex insert extension	98806000

Bath spouts

Features of all variants

/ 1 function
/ projection: 176 mm
/ wall-mounted
/ maximum flow rate at 3 bar: 24 l/min
/ connection dimension: DN15
/ spray type: normal spray

with plate

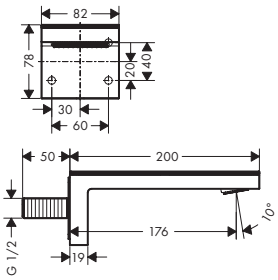

without plate

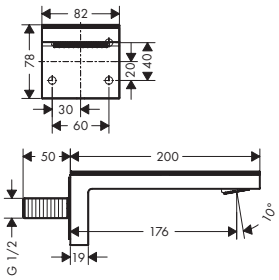

Technologies

Quick Clean

Measurements within scale drawings are in mm.
Technical specifications and units of measure are subject to change.

Bath spouts

Overview variants

Projection (mm)	Cover	Finish	Code no.
176	with plate	Chrome/Mirror Glass	47410000
		Chrome/Black Glass	47410600
		Matt Black/Black Glass	47410670
176	without plate	Chrome	47412000
		Brushed Bronze	47412140
		Brushed Black Chrome	47412340
		Matt Black	47412670
		AXOR FinishPlus*	47412XXX

Plates metal

Features of all variants

/ material: metal / removable

117

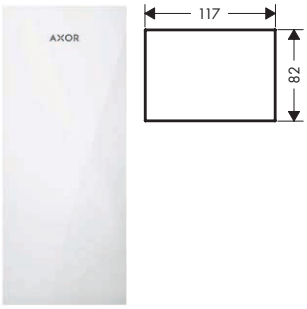

200

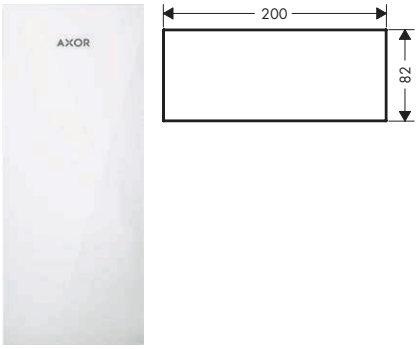

245

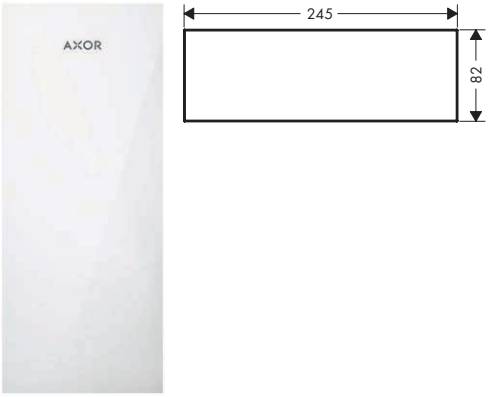

Overview variants

Length (mm)	Finish	Code no.
117	Chrome	47905000
	Brushed Bronze	47905140
	Brushed Black Chrome	47905340
	Matt Black	47905670
	AXOR FinishPlus*	47905XXX
200	Chrome	47903000
	Brushed Bronze	47903140
	Brushed Black Chrome	47903340
	Matt Black	47903670
	AXOR FinishPlus*	47903XXX
245	Chrome	47904000
	Brushed Bronze	47904140
	Brushed Black Chrome	47904340
	Matt Black	47904670
	AXOR FinishPlus*	47904XXX

*AXOR FinishPlus: For further AXOR FinishPlus surfaces please see the AXOR FinishPlus overview on page 44.

Plates glass

Features of all variants

/ material: glass
/ removable

117

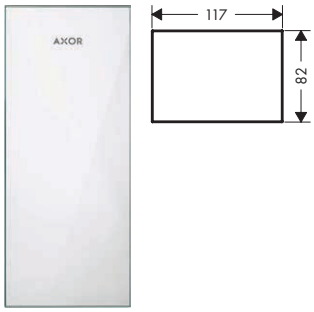

200

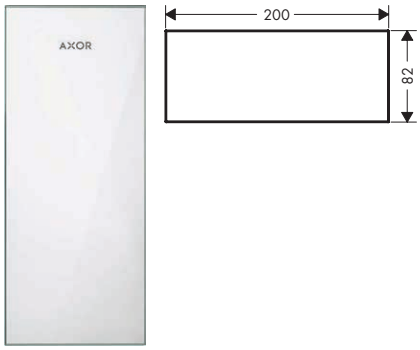

245

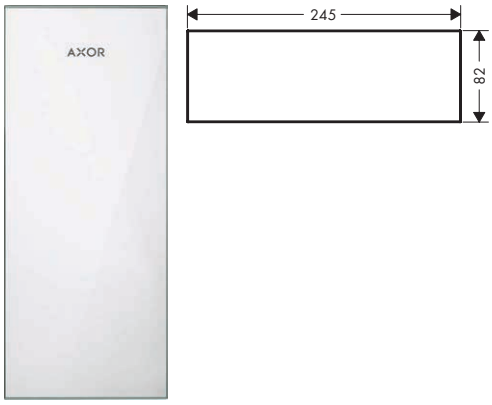

Overview variants

Length (mm)	Finish	Code no.
117	Mirror	47902000
	Black	47902600
200	Mirror	47900000
	Black	47900600
245	Mirror	47901000
	Black	47901600

Plates American Walnut

Features of all variants

/ material: walnut
/ removable
/ since wood is a natural material, each piece is unique, and wood markings may vary

117

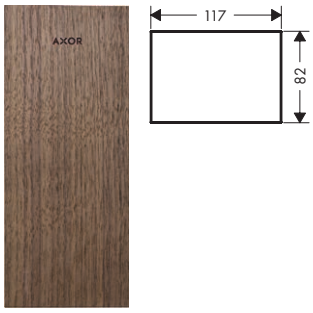

200

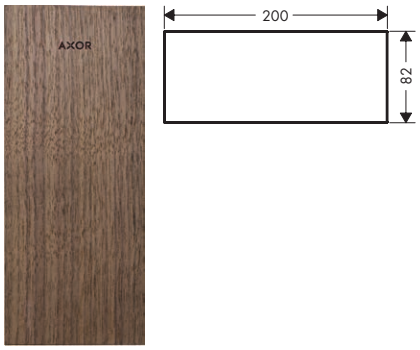

245

Overview variants

Length (mm)	Finish	Code no.
117	Black Walnut	47908000
200	Black Walnut	47906000
245	Black Walnut	47907000

Measurements within scale drawings are in mm.
Technical specifications and units of measure are subject to change.

Plates Marble Lasa Covelano Vena Oro

Features of all variants

/ material: marble
/ removable
/ since marble is a natural material, each piece is unique, and marbling markings may vary

117

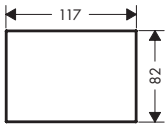

200

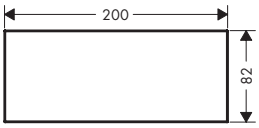

245

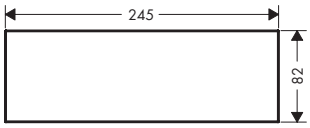

Overview variants

Length (mm)	Finish	Code no.
117	Marble Lasa Covelano Vena Oro	47911000
200	Marble Lasa Covelano Vena Oro	47909000
245	Marble Lasa Covelano Vena Oro	47910000

Plates Marble Nero Marquina

Features of all variants

/ material: marble
/ removable
/ since marble is a natural material, each piece is unique, and marbling markings may vary

117

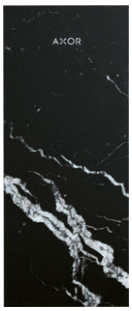

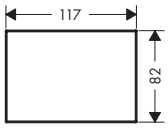

200

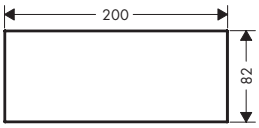

245

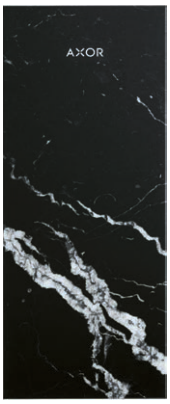

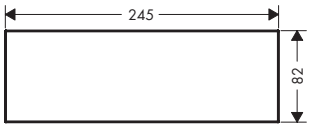

Overview variants

Length (mm)	Finish	Code no.
117	Marble Nero Marquina	47915000
200	Marble Nero Marquina	47913000
245	Marble Nero Marquina	47914000

*AXOR FinishPlus: For further AXOR FinishPlus surfaces please see the AXOR FinishPlus overview on page 44.

Plates Leather

Features of all variants

/ material: leather
/ removable

117

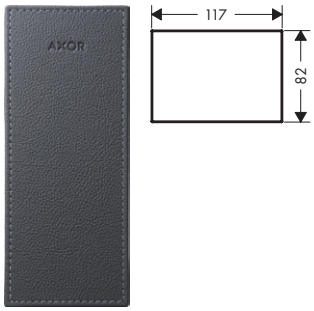

200

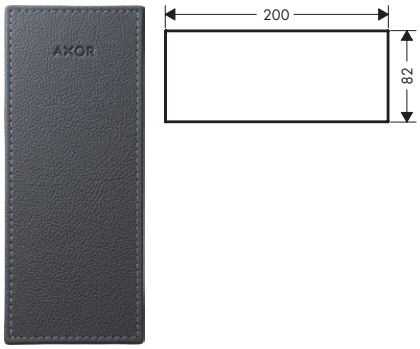

245

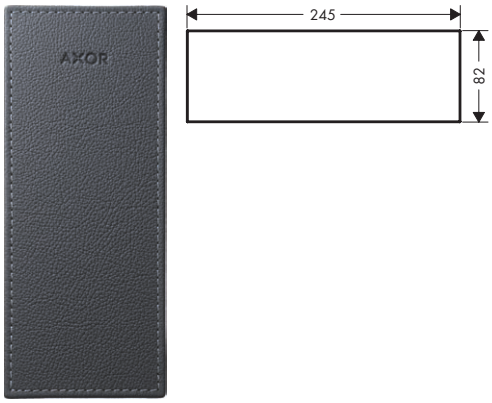

Overview variants

Length (mm)	Finish	Code no.
117	Leather	47918000
200	Leather	47916000
245	Leather	47917000

Mounting plates

Features of all variants

/ the mounting plate is required to attach an individual material to the AXOR MyEdition products without plate
/ material thickness: 3-5 mm
/ material: stainless steel
/ the corresponding AXOR MyEdition template is required for exact positioning of the individual material on the mounting plate
/ removable
/ with rubber seal for tight fit
/ not included: individual material, glue

117

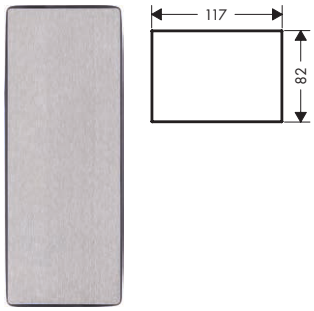

200

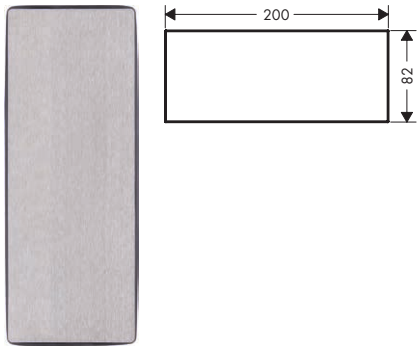

245

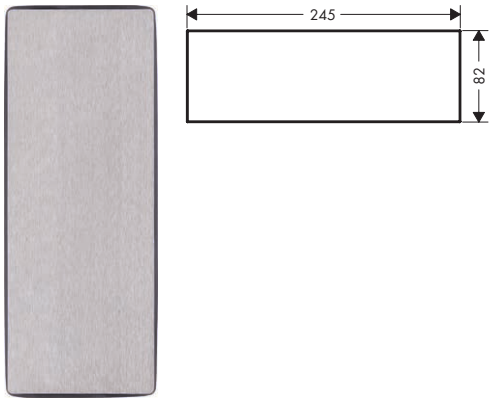

Overview variants

Length (mm)	Code no.
117	47923000
200	47921000
245	47922000

Measurements within scale drawings are in mm.
Technical specifications and units of measure are subject to change.

Mounting plates

Required parts:	For	Code no.
AXOR MyEdition Template 117	47923XXX	47924000
AXOR MyEdition Template 200	47921XXX	47925000
AXOR MyEdition Template 245	47922XXX	47926000

Template 117

Features

/ for exact positioning during gluing of the individual material on the AXOR MyEdition mounting plate # 47923000
/ the template can be used several times
/ not included: individual material, glue

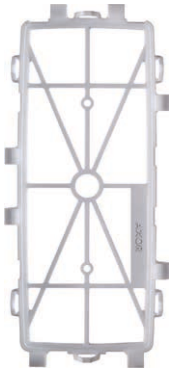

Code no.
47924000

Template 200

Features

/ for exact positioning during gluing of the individual material on the AXOR MyEdition mounting plate # 47921000
/ the template can be used several times
/ not included: individual material, glue

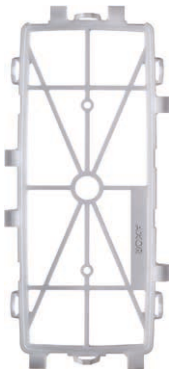

Code no.
47925000

*AXOR FinishPlus: For further AXOR FinishPlus surfaces please see the AXOR FinishPlus overview on page 44.

Template 245

Features

/ for exact positioning during gluing of the individual material on the AXOR MyEdition mounting plate # 47922000
/ the template can be used several times
/ not included: individual material, glue

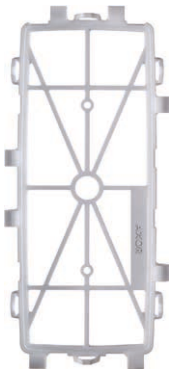

Code no.
47926000

Measurements within scale drawings are in mm.
Technical specifications and units of measure are subject to change.

Showers

AXOR ShowerSolutions
Overhead shower 300/300 2jet with shower arm

#35318XXX

page 430

AXOR ShowerSolutions
Overhead shower 460/300 3jet with ceiling connection

#35281XXX

page 434

AXOR ShowerComposition
Shower module 250/250 2jet with shoulder shower

#12594XXX

page 397

Shower controls

AXOR ShowerSelect ID
Thermostat for concealed installation square for 2 functions

#36752XXX

page 519

AXOR One
Thermostatic module for concealed installation for 1 function

#45711XXX

page 123

AXOR ShowerComposition
Thermostatic module 540/110 for concealed installation for 3 functions

#12572XXX

page 400

Further complementary products

AXOR Universal Rectangular
Bath towel rail 600 mm

#42661XXX

page 554

AXOR Suite Basins & Bathtub
Wash bowl 400/400 without tap hole and overflow

#42003XXX

page 603

AXOR Drain
Finish set shower drain 700

#42520XXX

page 632

Basin

Bidet

Bath

Shower

Thermostatic mixers / valves / diverters

Overhead showers

Hand showers

Showers sets

AXOR Starck V

Complementary products

AXOR STARCK

DESIGN

–

PHILIPPE STARCK

"The idea with AXOR Starck was to make a design that was deeply, structurally respectful of water. The first thing to bring water in history was the pump, and so the idea was to make something as simple as this." PHILIPPE STARCK

AXOR Starck

Minimalist bathroom design

AXOR Starck embodies the aesthetic of minimalism. The design focuses on the essential. A familiar shape, uncompromising in function, with an elemental connection to water. And therefore, an archetype: The collection is inspired by the historic hand pump used to pump water from wells.

Design: Philippe Starck

Characteristic design feature:

Rigorously cylindrical with a diagonal spout.

The designer's idea:

A minimalist statement: The basic form is derived from the historical hand pump—the first and most elementary object that made water available. Everything here has to do with the pure water and its beauty.

Special collection highlights:

/ Three handle variants: the classic feather handle, the modern pin handle and the ergonomic lever handle

/ Mixers in various ComfortZones that can be combined with various wash basins

/ AXOR Starck has been a bestseller for more than 30 years and is now a design classic

/ Innovative baton hand shower: the first of its kind and now a classic

→ Learn more about AXOR Starck: axor-design.com

Three single lever mixers – three handle variants

Three handles, one design: from the classic feather handle – the original from 1994 and a classic today—to the modern, totally streamlined pin handle and the ergonomic lever handle. The iconic, diagonal spout shape and the minimalist design underscore the focus on the essentials.

AXOR Starck single lever wash basin mixer with pin handle

/ Pin handle with integrated joystick cartridge: The sophisticated handle completes the minimalist design

/ Integrated cartridge enables a slim body

/ Three simple cylinders engender the minimalist design

/ Available in four heights: 70, 90, 170, 250

AXOR Starck single lever wash basin mixer with lever handle

/ Lever handle: The ergonomic lever handle represents modern minimalism

/ Available in three heights: 80, 100, 250

/ A CoolStart variant for saving energy and water is available

AXOR Starck single lever wash basinmixer with feather handle

/ Feather handle: classic form with a wink. The feather is a surprising detail within the overall minimalist look

/ Available in height 70

/ Original design from 1994: inspired by the hand pump

Minimalist look for the bathtub

An icon for your bathtub: Clear, linear forms with a diagonal spout that recalls the historical hand pump. The floor-standing bathtub mixer is particularly suitable for free-standing bathtubs.

Switching outlets

/ Switching from bathtub mixer to hand shower is done at the bath spout

/ Flow rate: 22 l/min (at 3 bar)

Metal effect shower hose 1.25 m (# 28282000) and Baton hand shower 2Jet (# 28532000)

/ Included in scope of delivery

Single lever basin mixers for hand washbasins

Features of all variants

/ consists of: single lever basin mixer, waste set
/ spray type: normal spray
/ maximum flow rate at 3 bar: 5 l/min
/ ceramic cartridge
/ suitable for continuous flow water heaters
/ pop-up waste set G 1¼
/ connection type: G ⅜ hose connections
/ connection dimension: DN15
/ EU taxonomy: max. 6 l/min – Substantial Contribution (SC) possible

70

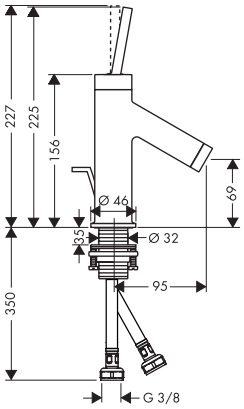

80

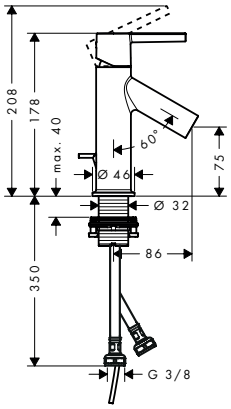

Special feature

Technologies

Overview variants

ComfortZone	Projection (mm)	Spout height (mm)	Handle version	Finish	Code no.
70	95	69	pin	Chrome	10116000
				Brushed Black Chrome	10116340
				AXOR FinishPlus*	10116XXX
80	86	75	lever	Chrome	10102000
				Brushed Black Chrome	10102340
				AXOR FinishPlus*	10102XXX

Single lever basin mixers

Features of all variants

/ consists of: single lever basin mixer, waste set
/ ComfortZone: 70
/ projection: 106 mm
/ spout height: 74 mm
/ handle variant: pin handle
/ spray type: normal spray
/ maximum flow rate at 3 bar: 5 l/min
/ ceramic cartridge
/ suitable for continuous flow water heaters
/ connection type: G ⅜ hose connections
/ connection dimension: DN15
/ EU taxonomy: max. 6 l/min – Substantial Contribution (SC) possible

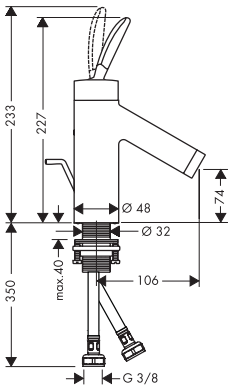

Special feature

Technologies

Certificates/declarations

Overview variants

ComfortZone	Projection (mm)	Spout height (mm)	Waste set	Finish	Code no.
70	106	74	pop-up	Chrome	10010000
				AXOR FinishPlus*	10010XXX
70	106	74	non-closing	Chrome	10018000
				AXOR FinishPlus*	10018XXX

Measurements within scale drawings are in mm.
Technical specifications and units of measure are subject to change.

Single lever basin mixers with pin handle

Features of all variants

/ consists of: single lever basin mixer, waste set
/ projection: 112 mm
/ handle variant: pin handle
/ spray type: normal spray
/ maximum flow rate at 3 bar: 5 l/min
/ ceramic cartridge
/ suitable for continuous flow water heaters
/ connection type: G ⅜ hose connections
/ connection dimension: DN15
/ EU taxonomy: max. 6 l/min – Substantial Contribution (SC) possible

90

170

250

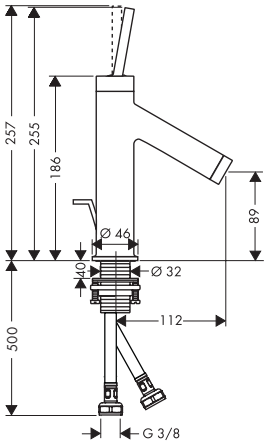

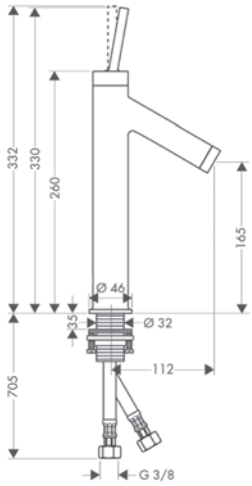

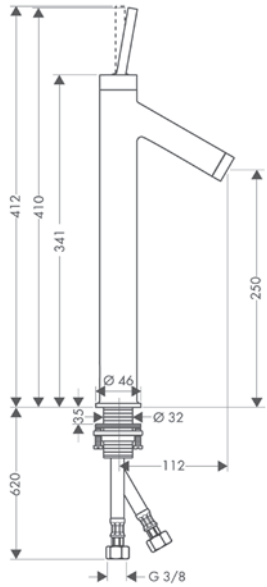

Special feature

EcoSmart

Technologies

Quick Clean | AirPower | Comfort Zone

Overview variants

ComfortZone	Projection (mm)	Spout height (mm)	Waste set	For wash bowls	Finish	Code no.
90	112	89	pop-up	–	Chrome	10111000
					Brushed Black Chrome	10111340
					AXOR FinishPlus*	10111XXX
90	112	89	non-closing	–	Chrome	10117000
					Brushed Black Chrome	10117340
					AXOR FinishPlus*	10117XXX

For more information about this product, please see the next page.

*AXOR FinishPlus: For further AXOR FinishPlus surfaces please see the AXOR FinishPlus overview on page 44.

Single lever basin mixers with pin handle

Overview variants

ComfortZone	Projection (mm)	Spout height (mm)	Waste set	For wash bowls	Finish	Code no.
170	112	165	non-closing	■	Chrome	10123000
					Brushed Black Chrome	10123340
					AXOR FinishPlus*	10123XXX
250	112	250	non-closing	■	Chrome	10129000
					Brushed Black Chrome	10129340
					AXOR FinishPlus*	10129XXX

Single lever basin mixers with lever handle

Features of all variants

/ consists of: single lever basin mixer, waste set
/ handle variant: lever handle
/ spray type: normal spray
/ ceramic cartridge
/ temperature limitation adjustable
/ suitable for continuous flow water heaters
/ connection type: G ⅜ hose connections
/ connection dimension: DN15
/ EU taxonomy: max. 6 l/min – Substantial Contribution (SC) possible

100

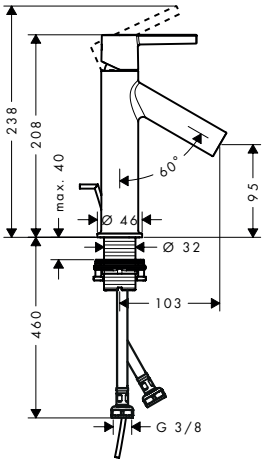

250

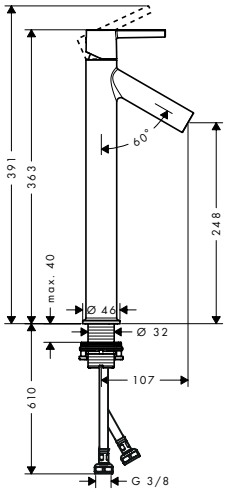

Special feature

CoolStart EcoSmart

Technologies

Quick clean AirPower Comfort Zone

Certificates/declarations

EPD

Overview variants

ComfortZone	Projection (mm)	Spout height (mm)	Waste set	CoolStart	For wash bowls	Max. flow rate at 3 bar (l/min)	Finish	Code no.
100	103	95	pop-up	■	–	3.5	Chrome	10007000
							Brushed Black Chrome	10007340
							AXOR FinishPlus*	10007XXX
100	103	95	pop-up	–	–	5	Chrome	10001000
							Brushed Black Chrome	10001340
							AXOR FinishPlus*	10001XXX
100	103	95	non-closing	–	–	5	Chrome	10003000
							Brushed Black Chrome	10003340
							AXOR FinishPlus*	10003XXX
250	107	248	non-closing	–	■	5	Chrome	10103000
							Brushed Black Chrome	10103340
							AXOR FinishPlus*	10103XXX

10003XXX This product is only available in the AXOR FinishPlus surface Brushed Red Gold via AXOR Signature.

Measurements within scale drawings are in mm.
Technical specifications and units of measure are subject to change.

Pillar tap 70 without waste set

Features of all variants

/ ComfortZone: 70
/ projection: 100 mm
/ spout height: 65 mm
/ handle variant: cylinder handle
/ spray type: normal spray
/ maximum flow rate at 3 bar: 5 l/min
/ ceramic valve 180°
/ for cold water connection
/ connection type: G ⅜ hose connection
/ connection dimension: DN15
/ EU taxonomy: max. 6 l/min – Substantial Contribution (SC) possible

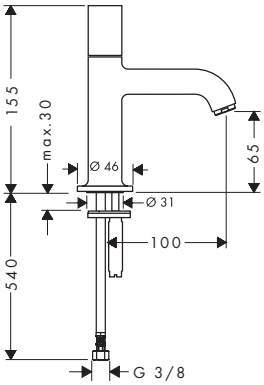

Special feature

EcoSmart

Technologies

Quick Clean | AirPower | Comfort Zone

ComfortZone	Projection (mm)	Spout height (mm)	Waste set	Finish	Code no.
70	100	65	without	Chrome	38130000
				Brushed Black Chrome	38130340
				AXOR FinishPlus*	38130XXX

Single lever bidet mixers

Features of all variants

/ consists of: single lever bidet mixer, waste set
/ aerator with ball pivot
/ spray type: normal spray
/ maximum flow rate at 3 bar: 7,5 l/min
/ ceramic cartridge
/ suitable for continous flow water heaters
/ pop-up waste set G 1¼
/ connection type: G ⅜ hose connections
/ connection dimension: DN15

pin handle

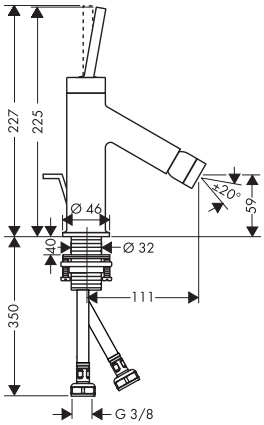

lever handle

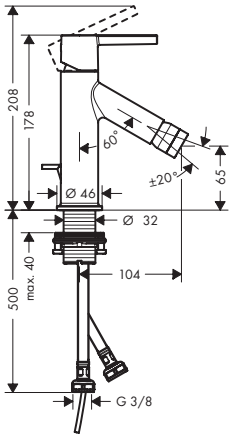

Technologies

Quick Clean | AirPower

Overview variants

Projection (mm)	Spout height (mm)	Handle version	Finish	Code no.
111	59	pin	Chrome	10211000
			Brushed Black Chrome	10211340
			AXOR FinishPlus*	10211XXX
104	65	lever	Chrome	10214000
			Brushed Black Chrome	10214340
			AXOR FinishPlus*	10214XXX

*AXOR FinishPlus: For further AXOR FinishPlus surfaces please see the AXOR FinishPlus overview on page 44.

Single lever basin mixer 90 with bidette hand shower and shower hose 1.60 m

Features of all variants

/ consists of: single lever basin mixer, bidette hand shower, shower holder, shower hose, waste set
/ ComfortZone: 90
/ projection: 112 mm
/ spout height: 89 mm
/ handle variant: pin handle
/ spray type: normal spray
/ spray type Bidette: shower spray
/ maximum flow rate at 3 bar: 5 l/min
/ ceramic cartridge
/ suitable for continuous flow water heaters
/ push-open waste set G 1¼
/ connection type: G ⅜ hose connections
/ connection dimension: DN15
/ EU taxonomy: max. 6 l/min – Substantial Contribution (SC) possible

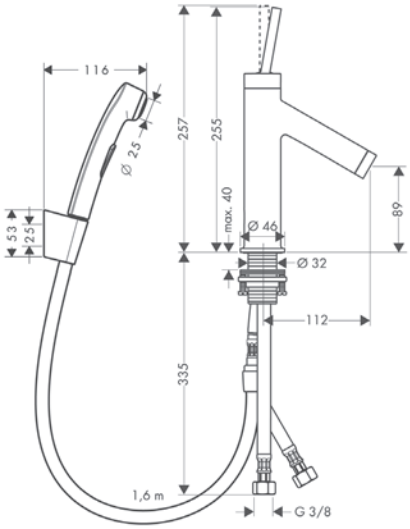

Special feature

EcoSmart

Technologies

Quick clean, AirPower, Comfort Zone

Certificates/declarations

EPD

Projection (mm)	Spout height (mm)	Finish	Code no.
112	89	Chrome	10300000
		Brushed Black Chrome	10300340
		AXOR FinishPlus*	10300XXX

This product is only available in the AXOR FinishPlus surface Polished Gold Optic via AXOR Signature.

Single lever bath mixer for exposed installation with pin handle

Features of all variants

/ 2 functions
/ projection: 200 mm
/ centre distance: 150 ± 16 mm
/ spray type mixer: normal spray
/ maximum flow rate at 3 bar: 18 l/min
/ flow rate for bath spout at 3 bar: 18 l/min
/ flow rate of hand shower at 3 bar: 16 l/min
/ ceramic cartridge
/ temperature limitation adjustable
/ diverter with automatic resetting
/ non-return valve
/ with silencer
/ suitable for continous flow water heaters
/ connection dimension: DN15
/ connection type: S-connections
/ wall-mounted
/ min. operating pressure: 1 bar
/ max. operating pressure: 10 bar

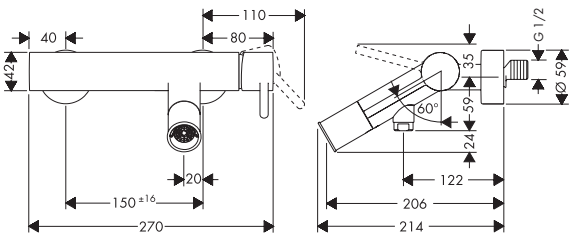

Technologies

AirPower

Projection (mm)	Handle version	Finish	Code no.
200	pin	Chrome	10411000
		Brushed Black Chrome	10411340
		AXOR FinishPlus*	10411XXX

Measurements within scale drawings are in mm.
Technical specifications and units of measure are subject to change.

Single lever bath mixer floor-standing with pin handle

Features of all variants

/ consists of: single lever bath mixer floor standing, baton hand shower, shower holder
/ 2 functions
/ projection: 156 mm
/ spray type mixer: normal spray
/ spray type hand shower: MonoRain, Rain
/ maximum flow rate at 3 bar: 18 l/min
/ flow rate for bath spout at 3 bar: 18 l/min
/ flow rate of hand shower at 3 bar: 15 l/min
/ ceramic cartridge
/ temperature limitation adjustable
/ diverter with automatic resetting
/ non-return valve
/ suitable for continous flow water heaters
/ connection dimension: DN15
/ connection type: basic set
/ deck mounted
/ min. operating pressure: 1 bar
/ max. operating pressure: 10 bar

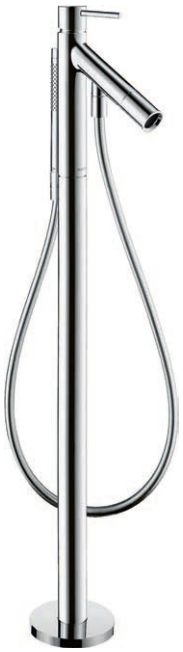

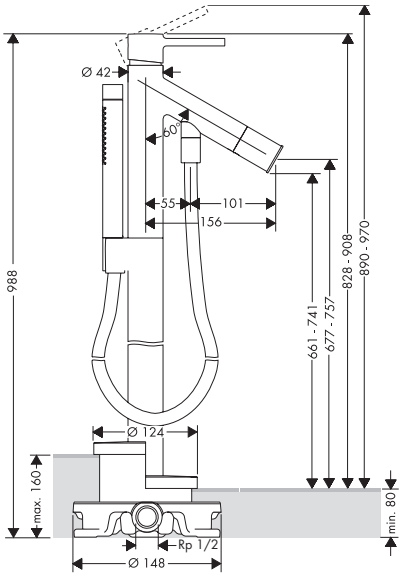

Technologies

AirPower

Spray types

Rain | Mono Rain

Certificates/declarations

EPD

Projection (mm)	Handle version	Finish	Code no.
156	pin	Chrome	10456000
		Brushed Black Chrome	10456340
		AXOR FinishPlus*	10456XXX

Required parts:		Code no.
	Basic set for mixers floor-standing	10452180

Optional parts:		Finish	Code no.
	Sealing foil for basic set bath mixer floor-standing		96441000
	AXOR Starck Extension 60 mm for spout	Chrome	10981000
		AXOR FinishPlus*	10981XXX
	AXOR Starck Extension 60 mm for pipe		97686000

*AXOR FinishPlus: For further AXOR FinishPlus surfaces please see the AXOR FinishPlus overview on page 44.

Single lever bath mixers for concealed installation

Features of all variants

/ 2 functions
/ ceramic cartridge
/ temperature limitation adjustable
/ diverter with automatic resetting
/ suitable for continous flow water heaters
/ connection type: basic set
/ wall-mounted
/ no additional maintenance opening required

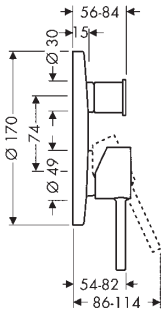

Overview variants

Handle version	Security combination EN 1717	Max. flow rate at 3 bar (l/min)	Finish	Code no.
pin	–	29	Chrome	10416000
			Brushed Black Chrome	10416340
			AXOR FinishPlus*	10416XXX
pin	■	26	Chrome	10418000
			Brushed Black Chrome	10418340

Required parts (choose one):			Code no.
Option 1		AXOR iBox universal 2 Basic set	01400180
	+	Adapter plate for iBox universal 2	13588000
Option 2		AXOR iBox universal Basic set	01700180

Bath spout

Features of all variants

/ 1 function
/ projection: 122 mm
/ maximum flow rate at 3 bar: 20 l/min
/ connection dimension: device connection DN20
/ spray type: normal spray

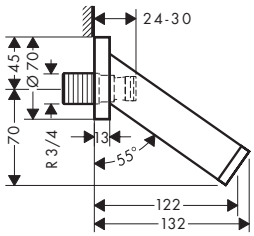

Technologies

AirPower

Projection (mm)	Finish	Code no.
122	Chrome	10410000
	Brushed Black Chrome	10410340
	AXOR FinishPlus*	10410XXX

Measurements within scale drawings are in mm.
Technical specifications and units of measure are subject to change.

Rim mounted bath set with hand shower

Features

/ consists of: hand shower, shower holder, shower hose, Secubox, Secuflex hose brake, hose insert
/ suitable for for installation on bath rim or tile surround (no mounting plate available)
/ connection dimension: DN15
/ drilling diameter on bath tub: Ø 50 mm
/ maximum pull-out length of hand shower: 1.10 m

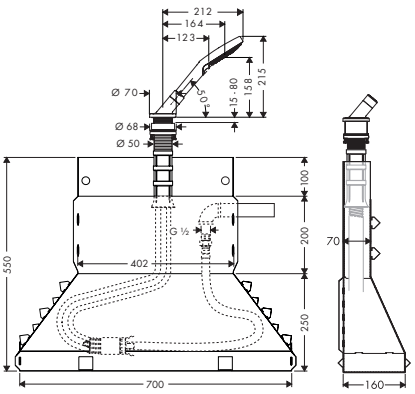

Finish	Code no.
Chrome	19418000
Brushed Bronze	19418140
Brushed Black Chrome	19418340
Polished Gold Optic	19418990
AXOR FinishPlus*	19418XXX

Optional parts:	Code no.
Secuflex insert extension	98806000

Single lever shower mixer for exposed installation with pin handle

Features of all variants

/ 1 function
/ centre distance: 150 ± 16 mm
/ maximum flow rate at 3 bar: 28 l/min
/ flow rate of hand shower at 3 bar: 16 l/min
/ ceramic cartridge
/ temperature limitation adjustable
/ non-return valve
/ with silencer
/ suitable for continous flow water heaters
/ hose connection: DN15
/ connection dimension: DN15
/ min. operating pressure: 1 bar
/ max. operating pressure: 10 bar
/ connection type: S-connections

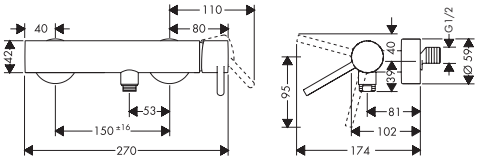

Handle version	Finish	Code no.
pin	Chrome	10611000
	Brushed Black Chrome	10611340
	AXOR FinishPlus*	10611XXX

*AXOR FinishPlus: For further AXOR FinishPlus surfaces please see the AXOR FinishPlus overview on page 44.

Single lever shower mixer for concealed installation with pin handle

Features of all variants

/ 1 function
/ maximum flow rate at 3 bar: 29 l/min
/ temperature limitation adjustable
/ with silencer
/ suitable for continous flow water heaters
/ min. operating pressure: 1 bar
/ max. operating pressure: 10 bar
/ connection type: basic set

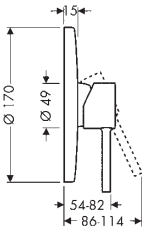

Handle version	Finish	Code no.
pin	Chrome	10616000
	Brushed Black Chrome	10616340
	AXOR FinishPlus*	10616XXX

Required parts (choose one):			Code no.
Option 1		AXOR iBox universal 2 Basic set	01400180
+		Adapter plate for iBox universal 2	13588000
Option 2		AXOR iBox universal Basic set	01700180

Thermostat for concealed installation with shut-off valve

Features of all variants

/ 1 function
/ thermostat cartridge, ceramic valves 90°
/ maximum flow rate at 3 bar: 25 l/min
/ min. operating pressure: 1 bar
/ max. operating pressure: 10 bar
/ Safety stop at 40 °C
/ temperature limitation adjustable
/ non-return valve
/ with silencer
/ connection type: basic set

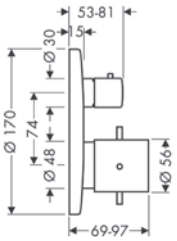

Special feature

Technologies

Handle version	Finish	Code no.
cylinder	Chrome	10700000
	Brushed Black Chrome	10700340
	AXOR FinishPlus*	10700XXX

Measurements within scale drawings are in mm.
Technical specifications and units of measure are subject to change.

Thermostat for concealed installation with shut-off valve

Required parts (choose one):			Code no.
Option 1		AXOR iBox universal 2 Basic set	01400180
+		Adapter plate for iBox universal 2	13588000
Option 2		AXOR iBox universal Basic set	01700180

Thermostat for concealed installation with shut-off/ diverter valve

Features of all variants

/ 2 functions
/ thermostat cartridge, shut-off valve
/ flow rate upper outlet: 25 l/min
/ flow rate lower outlet: 29 l/min
/ maximum flow rate at 3 bar: 29 l/min
/ min. operating pressure: 1 bar
/ max. operating pressure: 10 bar
/ Safety stop at 40 °C
/ temperature limitation adjustable
/ non-return valve
/ with silencer
/ connection type: basic set

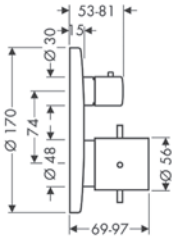

Special feature

Technologies

Certificates/declarations

Handle version	Finish	Code no.
cylinder	Chrome	10720000
	Brushed Black Chrome	10720340
	AXOR FinishPlus*	10720XXX

Required parts (choose one):			Code no.
Option 1		AXOR iBox universal 2 Basic set	01400180
+		Adapter plate for iBox universal 2	13588000
Option 2		AXOR iBox universal Basic set	01700180

*AXOR FinishPlus: For further AXOR FinishPlus surfaces please see the AXOR FinishPlus overview on page 44.

Overhead shower 240 1jet

Features of all variants

/ shower head size: 240 mm
/ spray type: RainAir
/ flow rate RainAir spray at 3 bar: 19,8 l/min
/ function from: 13,5 l/min
/ maximum flow rate at 3 bar: 19,8 l/min
/ minimum flow pressure: 1,6 bar
/ overhead shower angle adjustable
/ material spray disc: metal
/ spray disc removable for cleaning
/ installation: ceiling or wall
/ connection thread: G ½
/ connection dimension: DN15
/ suitable for continous flow water heaters

RainAir

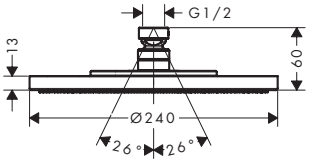

Technologies

AirPower
Quick Clean

Spray types

RainAir

Certificates/declarations

EPD

Shower head size	Number of sprays	Spray types	Function from (l/min)	Max. flow rate at 3 bar (l/min)	Min. flow pressure (bar)	Finish	Code no.
240	1	RainAir	13.5	19.8	1.6	Chrome	28494000
						Brushed Bronze	28494140
						Brushed Black Chrome	28494340
						Polished Gold Optic	28494990
						AXOR FinishPlus*	28494XXX

Required parts (choose one):		Finish	Code no.
	AXOR ShowerSolutions Shower arm 390 mm	Chrome	26431000
		Brushed Bronze	26431140
		Brushed Black Chrome	26431340
		Polished Gold Optic	26431990
		AXOR FinishPlus*	26431XXX
	AXOR ShowerSolutions Ceiling connector 100 mm	Chrome	26432000
		Brushed Bronze	26432140
		Brushed Black Chrome	26432340
		Polished Gold Optic	26432990
		AXOR FinishPlus*	26432XXX
	AXOR ShowerSolutions Ceiling connector 300 mm	Chrome	26433000
		Brushed Bronze	26433140
		Brushed Black Chrome	26433340
		Polished Gold Optic	26433990
		AXOR FinishPlus*	26433XXX

Measurements within scale drawings are in mm.
Technical specifications and units of measure are subject to change.

Baton hand showers 2jet, 1jet

Features of all variants

/ shower head size: 68 x 24 mm
/ QuickClean: Limescale deposits can simply be rubbed off with your finger
/ minimum flow pressure: 1 bar
/ rinseable filter washer
/ connection thread: G ½
/ suitable for continous flow water heaters

2 spray types

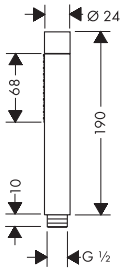

1 spray type

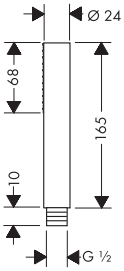

Special feature

EcoSmart

Technologies

Quick Clean

Spray types

Rain, Mono Rain

Certificates/declarations

EPD

Overview variants

Shower head size	Number of sprays	Spray types	Function from (l/min)	Max. flow rate at 3 bar (l/min)	Min. flow pressure (bar)	Finish	Code no.
68/24	2	Rain, MonoRain	6.4	14.5	1	Chrome	28532000
						Brushed Bronze	28532140
						Brushed Black Chrome	28532340
						Matt Black	28532670
						Polished Gold Optic	28532990
						AXOR FinishPlus*	28532XXX
68/24	1	Rain	6.5	8	1	Chrome	10531000
						Brushed Bronze	10531140
						Brushed Black Chrome	10531340
						Polished Gold Optic	10531990
						AXOR FinishPlus*	10531XXX

*AXOR FinishPlus: For further AXOR FinishPlus surfaces please see the AXOR FinishPlus overview on page 44.

Shower sets 2jet, 1jet

Features of all variants

/ consists of: shower bar, baton hand shower, shower hose, slider
/ shower head size: 68 x 24 mm
/ QuickClean: Limescale deposits can simply be rubbed off with your finger
/ minimum flow pressure: 1 bar
/ operating pressure: min. 1 bar/max. 6 bar
/ wall supports made of plastic
/ profile pipe: round
/ shower bar diameter: 25 mm
/ drilling distance: 915 mm
/ shower hose with cylindrical nut on both ends
/ pivot connector prevents hose from tangling

2 spray types

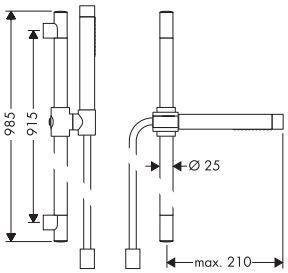

1 spray type

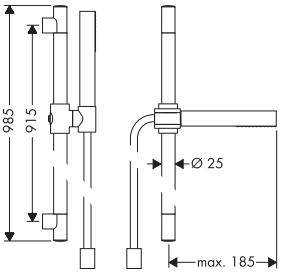

Special feature

EcoSmart

Technologies

Quick Clean

Spray types

Rain

Mono Rain

Overview variants

Shower head size	Number of sprays	Spray types	Function from (l/min)	Max. flow rate at 3 bar (l/min)	Min. flow pressure (bar)	Finish	Code no.
68/24	2	Rain, MonoRain	6.4	14.5	1	Chrome	27980000
						Brushed Bronze	27980140
						Brushed Black Chrome	27980340
						Polished Gold Optic	27980990
						AXOR FinishPlus*	27980XXX
68/24	1	Rain	6.5	8	1	Chrome	27983000
						Brushed Bronze	27983140
						Brushed Black Chrome	27983340
						Polished Gold Optic	27983990
						AXOR FinishPlus*	27983XXX

Measurements within scale drawings are in mm.
Technical specifications and units of measure are subject to change.

Shower bar 0.90 m with shower hose 1.60 m

Features of all variants

/ consists of: shower bar, shower hose, slider
/ pipe length: 985 mm
/ shower bar diameter: 25 mm
/ profile pipe: round
/ drilling distance: 915 mm
/ shower hose length: 1600 mm
/ suitable for: AXOR Starck baton hand shower and AXOR One hand shower
/ slider steplessly adjustable
/ metal hand shower holder

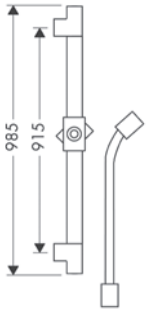

Length (m)	Shower hose length (mm)	Finish	Code no.
0,90	1600	Chrome	27830000
		Brushed Bronze	27830140
		Brushed Black Chrome	27830340
		Polished Gold Optic	27830990
		AXOR FinishPlus*	27830XXX

*AXOR FinishPlus: For further AXOR FinishPlus surfaces please see the AXOR FinishPlus overview on page 44.

"AXOR Starck V is a revolution: a minimal object, nearly invisible and totally transparent, that encloses the water vortex. This enables a special experience with water." PHILIPPE STARCK

AXOR Starck V

The vitality of water

AXOR Starck V is a unique eye-catcher at the wash basin. With its organic, sculptural design, the spectacular glass body displays the water, revealing a wonder of nature: the water vortex. In all its strength and beauty. Vital and captivating.

Design: Philippe Starck

Characteristic design feature:

A fascinating eye-catcher: The organic, sculptural form with a body in transparent glass, making the powerful, specially designed water vortex visible.

The designer's idea:

Making the beauty and vitality of water visible by means of a glass body.

Special collection highlights:

/ Two variants: Single lever mixer 140 and 220 with a higher base
/ With EasyClick and SafetyStop function: The spout can be separated from the base with just a click in order to clean or replace it
/ Convenient 360° swivel spout
/ Spout made of high-quality crystal glass
/ Economical water consumption: 4 l/min (at 3 bar)
/ AXOR Starck V is the fifth collection designed in cooperation with Philippe Starck

→ Learn more about AXOR Starck: axor-design.com

Understanding the beauty and soul of water

Unrelenting curiosity and a boundless passion for water are what motivate Klaus Grohe, son of the company's founder, Hans Grohe. He is particularly impressed by the pure energy of a vortex. He wonders how to bring this natural spectacle home, to the wash basin, and starts to develop a water vortex in a mixer. Klaus Grohe and AXOR find a partner in designer Philippe Starck, who creates a glass mixer, a kind of organic sculpture, in which this power of nature can be seen.

Water can be breath-takingly beautiful. When it forms an elegant vortex, it becomes a true natural spectacle.

In a way that, up to now, was not possible, AXOR Starck V lets us experience the elemental fascination of water. The transparent glass body enables us to see the elegance and vitality of a water vortex.

Swivel spout

For optimum water spray alignment and more flexibility in installation

Removable spout

Makes it easy to empty when not in use and to clean in the dishwasher

Intensity control

To adapt perfectly to local water pressure conditions, the intensity of the water vortex can be adjusted with the Allen key included with delivery

SafetyStop function

Closes the water valve when removing the body

EasyClick

Makes it easy to remove the glass body

Low water consumption

Flow rate limited to 4 l/min (at 3 bar)

Joystick cartridge

The handle can be positioned to the left or right, depending on the user's preferences

Glass spout

The crystal glass spout enables users to see an extraordinary water spectacle, the vortex

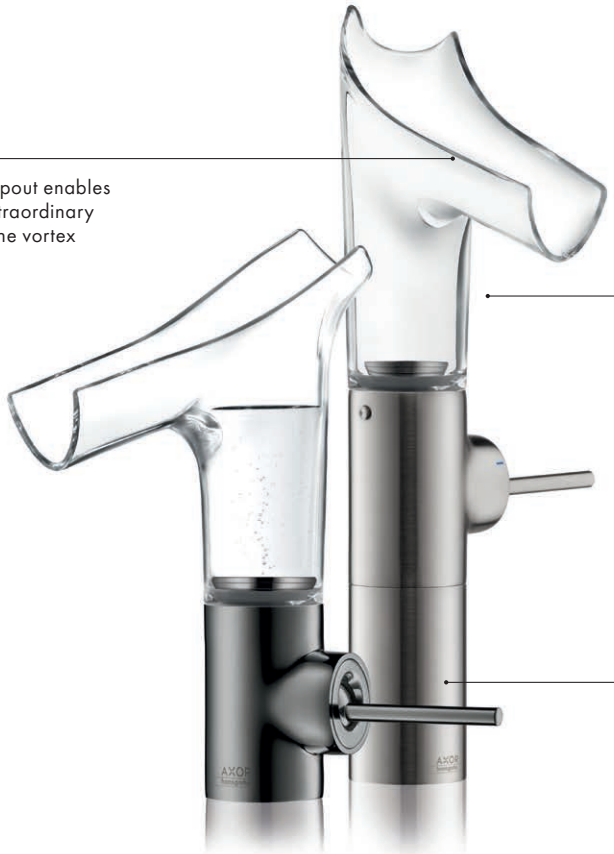

Product variants

The single lever wash basin mixer, and single lever mixer variant for wash bowls are suitable for a variety of applications

Individualization

The base can be individualized with the exclusive AXOR FinishPlus surfaces

Single lever basin mixers with glass spout

Features of all variants

/ consists of: single lever basin mixer, waste set
/ projection: 125 mm
/ handle variant: pin handle
/ swivel range adjustable in 3 steps 95°, 120° or 360°
/ spray type: laminar spray
/ EasyClick connection between body and spout with SafetyStop-function
/ Spout is dishwasher safe
/ material spout: crystal glass
/ maximum flow rate at 3 bar: 4 l/min
/ ceramic cartridge
/ non-closing waste set
/ connection type: G ⅜ hose connections
/ connection dimension: DN15
/ handle can be positioned on the right or left
/ not recommended for the public and semi-public area
/ EU taxonomy: max. 6 l/min – Substantial Contribution (SC) possible

140

220

Special feature

EcoSmart

Technologies

Comfort Zone

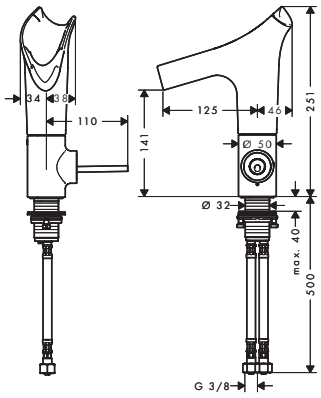

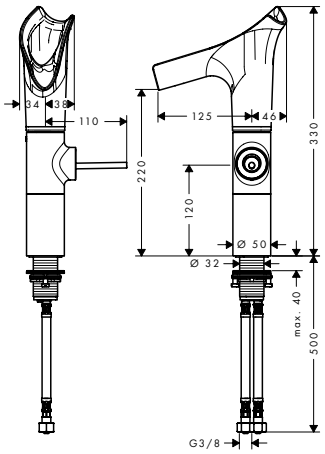

Overview variants

ComfortZone	Projection (mm)	Spout height (mm)	For wash bowls	Structure element	Finish	Code no.
140	125	141	–	without structure	Chrome	12112000
					White	12112450
					AXOR FinishPlus*	12112XXX
220	125	220	■	without structure	Chrome	12114000
					AXOR FinishPlus*	12114XXX

Measurements within scale drawings are in mm.
Technical specifications and units of measure are subject to change.

Showers

AXOR One
Overhead shower 280 2jet with shower arm

#48492XXX

page 135

AXOR ShowerSolutions
Overhead shower 220 1jet EcoSmart

#35383XXX

page 440

AXOR ShowerSelect ID
Thermostat for concealed installation round for 2 functions

#36750XXX

page 519

Shower systems

AXOR Starck
Shower column with thermostat and overhead shower 240 1jet

#12672XXX

page 498

AXOR Starck
Nature shower column with overhead shower 240 1jet

#12670XXX

page 499

AXOR ShowerSolutions
Showerpipe with thermostat 800 and overhead shower 350 1jet

#27984XXX

page 500

Further complementary products

AXOR Universal Circular
Bath towel rail 600 mm

#42860XXX

page 561

AXOR FlushPlate
Flush plate for Geberit Sigma

#42530XXX

page 581

AXOR Bidette Showers
Bidette hand shower 1jet round for cold water with shower holder and shower hose 1.25 m

#29240XXX

page 463

Basin

Bath

Shower

Thermostatic mixers / valves /diverters

Complementary products

AXOR STARCK ORGANIC

DESIGN
–
PHILIPPE STARCK

"Nature loves economy. Thats why the AXOR Starck Organic collection looks so reduced, yet is full of invention. It is revolutionary." PHILIPPE STARCK

AXOR Starck Oraganic

Sense and sensibility

Modeled on nature. In its beauty, efficiency and primeval essence. AXOR Starck Organic unifies design and technology into a sculptural appearance with sensuous, organic forms. Minimalist in water design and in its use of resources. As nature would have intended.

Design: Philippe Starck

Characteristic design feature:

Organic, minimalist bathroom design: The mixer, inspired by the primeval essence of nature, refers to forms such as a branch or a water droplet.

The designer's idea:

A revolutionary way of dealing with the vital element of water: AXOR Starck Organic brings ecology and economy together in one collection. In an organic, composition with a sensual water experience.

Special collection highlights:

/ Innovative control concept: Separate control of water flow and temperature

/ AXOR wash basin mixer with water consumption of just 3.5 l/min (at 3 bar)

/ Innovative shower spray for a mixer: a sensual water experience with a soft, luxuriant stream of water and low consumption

/ Intelligent use of resources with respect to energy and materials

/ AXOR Starck Organic is the fourth collection designed in cooperation with Philippe Starck

/ Distinguished with the Green Product Design Award

→ Learn more about AXOR Starck Organic: axor-design.com

An innovative concept for conscientiously controlling water flow and temperature

The innovative, two-handle mixer from AXOR Starck Organic is the next step in the evolution in mixer control. It moves away from the classic single lever mixers with which water temperature and flow are controlled simultaneously. Instead the mixer ensures an ergonomic motion sequence with economical water use: The temperature controller, used less frequently, is positioned on the mixer head; the handle for water flow control, always in use, is in a practical position below at the water spout.

Advantages of seperate controls

± °C

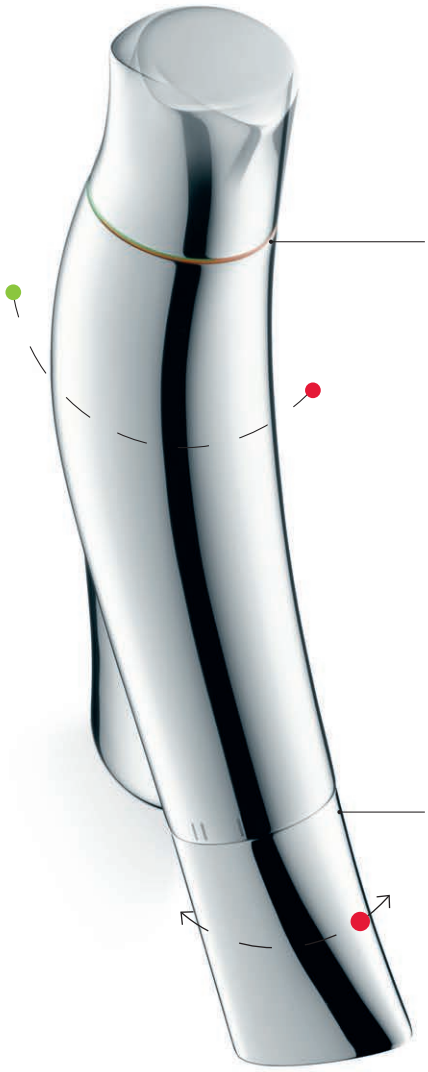

Temperature control

/ Preset to a preferred temperature or an energy-saving cold setting

/ A harmonious look in any position

/ The preset prevents dripping and dirt marks because the mixer handle rarely needs to be touched

/ New vivid, easy-to-see hot and cold labeling: cold water = green (energy-saving); hot water = orange

● on / off

Water flow control

/ Cleaner and more convenient, with direct operation at the spout

/ Normal position for 3.5 l / min: best functionality together with a consistent, pleasant water flow while still saving water

/ Booster position for increasing flow rate to 5 l / min

/ Gradual water flow control with snap-in positions at 3.5 l / min (Normal) and 5 l / min (Booster)

Intelligent functions set ecological and technological standards

Mixer shower spray

The innovative shower spray for the wash basin mixer sets new standards for sensuality and conservation. It generates a wonderful water flow with a pleasant feel while maintaining optimum function. With 90 small openings the spray former creates a soft, luxuriant shower spray.

Normal + Booster

Gradual water flow control up to the snap-in position for 3.5 l/min. Those who need a larger volume of water can simply switch to the Booster position (5 l/min).

Spray former

The spray former has a QuickClean function for easily removing limescale deposits. For a conventional spray jet, simply replace the spray former.

Adjustable spout

For the right-handed version, the spout is used in the ex-works position. Left-handed users can rotate the spout by 80° for perfect ergonomics. Simply unscrew the jet former with the appropriate key and reinsert the spout.

Revolutionary water experience. Low water consumption

AXOR Starck Organic minimizes the consumption of both water, a valuable natural resource, and energy. With the temperature preset, less hot water is used. During production of the collection, resources are used sparingly: The hollow body construction of the mixer requires less material and, as a result, less.

Setting the temperature consciously

The temperature can be set individually. A maximum temperature can be set to save energy costs and prevent scalding. This is interesting primarily for mixers used in public areas and hotels as well as in households with children

Minimized material use

About one third less brass is used in the mixer walls (hollow bodies) than in conventional manufacturing

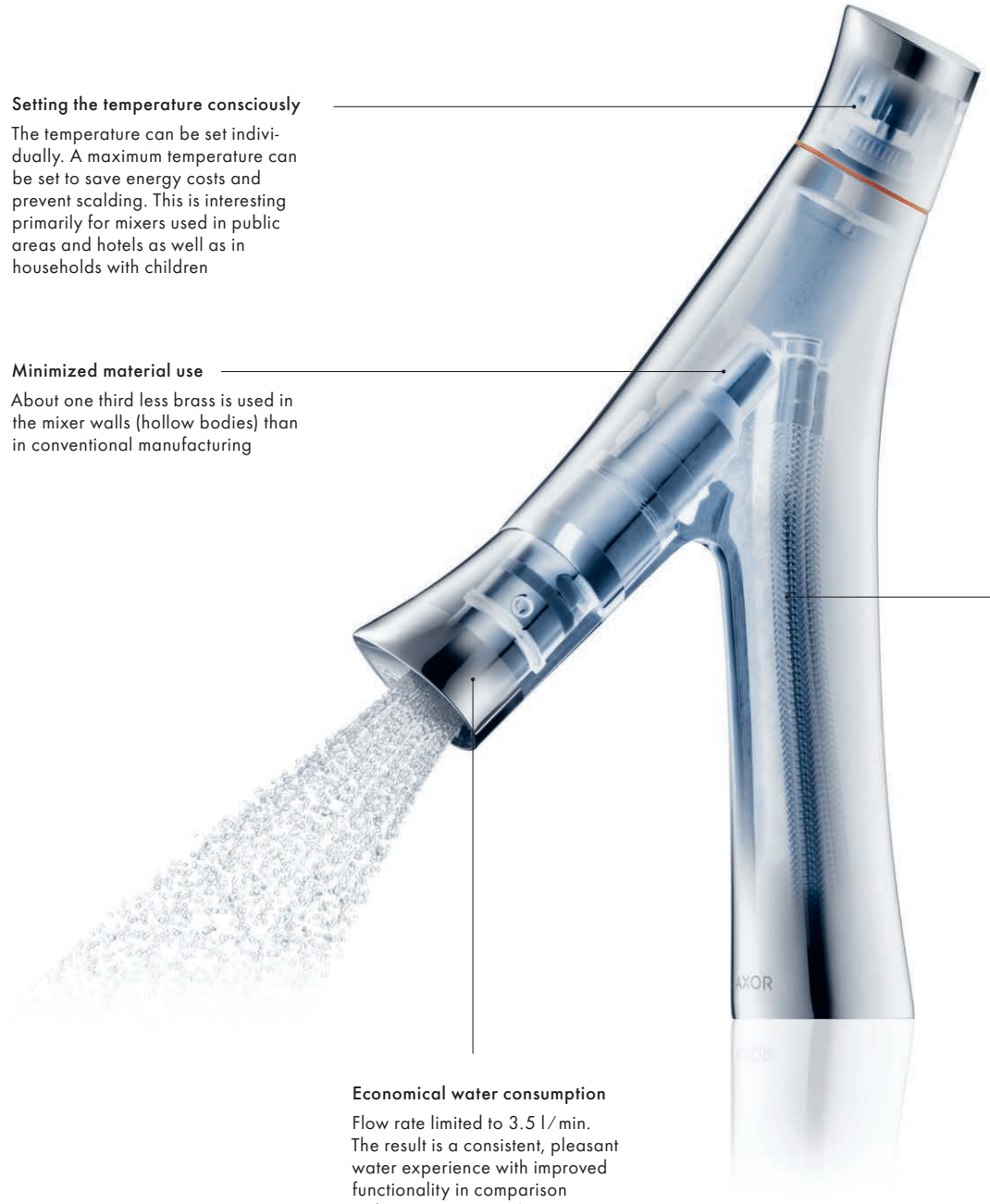

Isolated water conduction

Prevents direct water contact with the mixer body. This keeps drinking water free of lead and nickel concentrations

Economical water consumption

Flow rate limited to 3.5 l/min. The result is a consistent, pleasant water experience with improved functionality in comparison with our conventional mixers

Organic design all the way to the bathtub

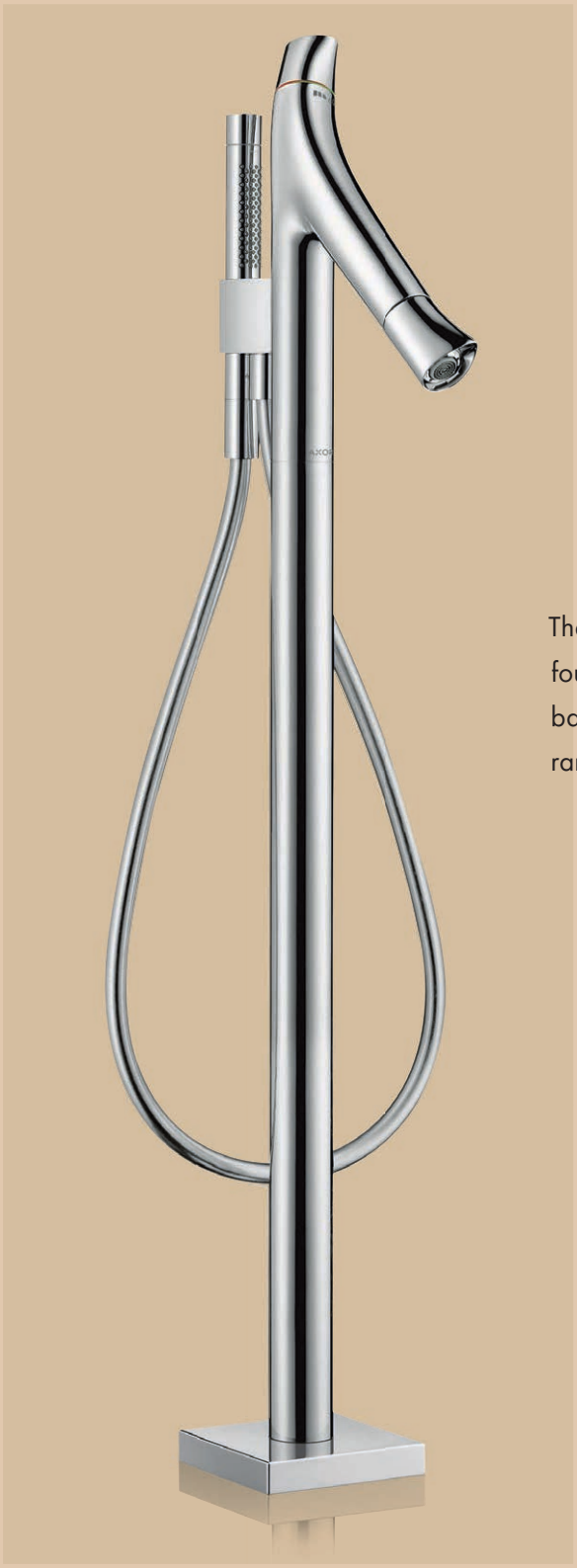

The striking, powerful AXOR Starck Organic design is also found in the extraordinary bath mixers. The floor-standing bath filler with integrated hand shower complements the range for free-standing bathtubs.

Thanks to its organic, minimalist design, it looks great with the broadest range of bathtub shapes.

2-handle basin mixer 50 for hand wash basins with pop-up waste set

Features of all variants

/ consists of: 2-handle basin mixer, waste set
/ ComfortZone: 50
/ projection: 109 mm
/ spout height: 50 mm
/ handle variant: cylinder handle
/ spray type: shower spray
/ maximum flow rate at 3 bar: 3,4 l/min
/ flow rate booster: 5 l/min
/ ceramic cartridge for temperature control
/ ceramic valve for volume control
/ temperature limitation adjustable
/ separation of temperature and volume control
/ with isolated water conduction – without contact with nickel and lead
/ suitable for continuous flow water heaters
/ pop-up waste set G 1¼
/ connection type: G ⅜ hose connections
/ connection dimension: DN15
/ EU taxonomy: max. 6 l/min – Substantial Contribution (SC) possible

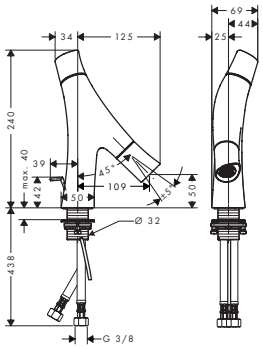

Special feature

EcoSmart

Technologies

Quick Clean
Comfort Zone

ComfortZone	Projection (mm)	Spout height (mm)	Waste set	Finish	Code no.
50	109	50	pop-up	Chrome	12014000
				AXOR FinishPlus*	12014XXX

2-handle basin mixers

Features of all variants

/ consists of: 2-handle basin mixer, waste set
/ handle variant: cylinder handle
/ spray type: shower spray
/ maximum flow rate at 3 bar: 3,5 l/min
/ flow rate booster: 5 l/min
/ ceramic cartridge for temperature control
/ ceramic valve for volume control
/ temperature limitation adjustable
/ separation of temperature and volume control
/ with isolated water conduction – without contact with nickel and lead
/ suitable for continuous flow water heaters
/ connection type: G ⅜ hose connections
/ connection dimension: DN15
/ EU taxonomy: max. 6 l/min – Substantial Contribution (SC) possible

80

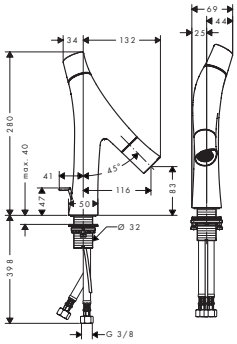

170

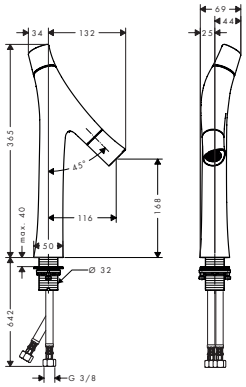

240

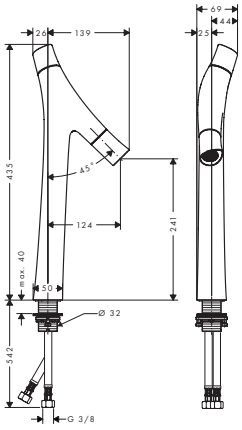

Special feature

EcoSmart

Technologies

Quick Clean
Comfort Zone

Measurements within scale drawings are in mm.
Technical specifications and units of measure are subject to change.

2-handle basin mixers

Overview variants

ComfortZone	Projection (mm)	Spout height (mm)	Waste set	For wash bowls	Finish	Code no.
80	116	83	pop-up	–	Chrome	12010000
					AXOR FinishPlus*	12010XXX
80	116	83	non-closing	–	Chrome	12011000
					AXOR FinishPlus*	12011XXX
170	116	168	non-closing	■	Chrome	12012000
					AXOR FinishPlus*	12012XXX
240	124	241	non-closing	■	Chrome	12013000
					AXOR FinishPlus*	12013XXX

2-handle basin mixer for concealed installation wall-mounted with spout 187 mm

Features of all variants

/ consists of: 2-handle basin mixer, waste set
/ projection: 187 mm
/ handle variant: cylinder handle
/ spray type: shower spray
/ maximum flow rate at 3 bar: 3,5 l/min
/ flow rate booster: 5 l/min
/ ceramic cartridge for temperature control
/ ceramic valve for volume control
/ temperature limitation adjustable
/ separation of temperature and volume control
/ with isolated water conduction – without contact with nickel and lead
/ suitable for continuous flow water heaters
/ non-closing waste set
/ connection type: basic set
/ connection dimension: DN15
/ EU taxonomy: max. 6 l/min – Substantial Contribution (SC) possible

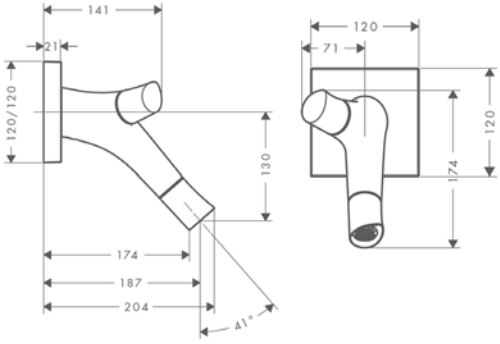

Special feature

EcoSmart

Technologies

Quick Clean

Projection (mm)	Max. flow rate at 3 bar (l/min)	Finish	Code no.
187	3.5	Chrome	12015000
		AXOR FinishPlus*	12015XXX

Required parts:		Code no.
	Basic set for Showerpipe/ shower column	10902180
	AXOR Starck Seal	96660000

Optional parts:		Code no.
	AXOR Starck Organic Extension set 28 mm for basin mixer wall-mounted	12918000

*AXOR FinishPlus: For further AXOR FinishPlus surfaces please see the AXOR FinishPlus overview on page 44.

Bath thermostat floor-standing

Features of all variants

/ consists of: bath thermostat floor standing, baton hand shower, shower hose, shower holder
/ projection 175 mm
/ 2 functions
/ thermostat cartridge, shut-off/ diverter valve
/ spray type mixer: normal spray
/ maximum flow rate at 3 bar: 20 l/min
/ flow rate for bath spout at 3 bar: 20 l/min
/ flow rate of hand shower at 3 bar: 15 l/min
/ min. operating pressure: 1 bar
/ max. operating pressure: 10 bar
/ Safety stop at 40 °C
/ temperature limitation adjustable
/ non-return valve
/ connection dimension: DN15
/ connection type: basic set
/ deck mounted
/ dirt filter included
/ spray type hand shower: Rain, MonoRain

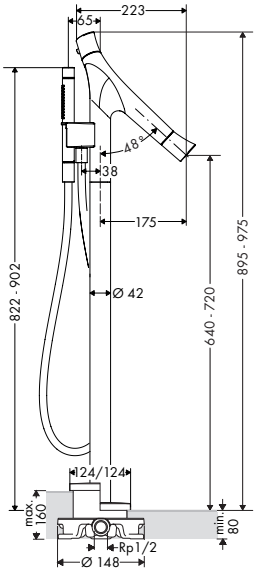

Special feature

Technologies

Spray types

Projection (mm)	Finish	Code no.
175	Chrome	12016000
	AXOR FinishPlus*	12016XXX

Required parts:		Code no.
	Basic set for mixers floor-standing	10452180

Optional parts:		Code no.
	Sealing foil for basic set bath mixer floor-standing	96441000
	Extension 60 mm	92135000

Measurements within scale drawings are in mm.
Technical specifications and units of measure are subject to change.

Thermostat for concealed installation with shut-off valve

Features

/ 1 function
/ thermostat cartridge, ceramic valves 90°
/ maximum flow rate at 3 bar: 25 l/min
/ min. operating pressure: 1 bar
/ max. operating pressure: 10 bar
/ Safety stop at 40 °C
/ temperature limitation adjustable
/ non-return valve
/ with silencer
/ connection type: basic set

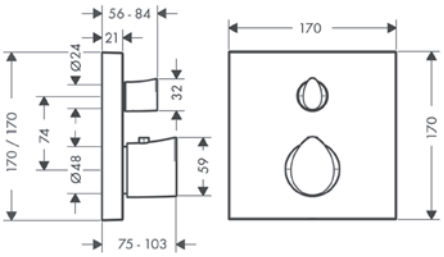

Special feature

Water Flow Control

Technologies

Thermostat | Safety Stop 40°C

Finish	Code no.
Chrome	12715000
AXOR FinishPlus*	12715XXX

Required parts (choose one):			Code no.
Option 1		AXOR iBox universal 2 Basic set	01400180
	+	Adapter plate for iBox universal 2	13588000
Option 2		AXOR iBox universal Basic set	01700180

Thermostat for concealed installation with shut-off/ diverter valve

Features

/ 2 functions
/ thermostat cartridge, shut-off/ diverter valve
/ flow rate upper outlet: 25 l/min
/ flow rate lower outlet: 29 l/min
/ maximum flow rate at 3 bar: 29 l/min
/ min. operating pressure: 1 bar
/ max. operating pressure: 10 bar
/ Safety stop at 40 °C
/ temperature limitation adjustable
/ non-return valve
/ with silencer
/ connection type: basic set

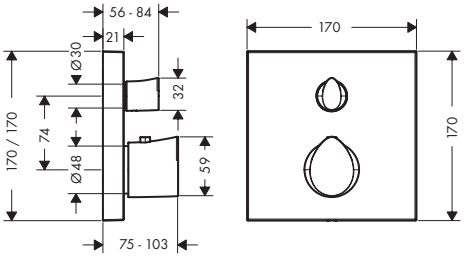

Special feature

Water Flow Control

Technologies

Thermostat | Safety Stop 40°C

Finish	Code no.
Chrome	12716000
AXOR FinishPlus*	12716XXX

Required parts (choose one):			Code no.
Option 1		AXOR iBox universal 2 Basic set	01400180
	+	Adapter plate for iBox universal 2	13588000
Option 2		AXOR iBox universal Basic set	01700180

*AXOR FinishPlus: For further AXOR FinishPlus surfaces please see the AXOR FinishPlus overview on page 44.

Possible product combinations

Showers

AXOR ShowerSolutions
Overhead shower 250/580 3jet

#35283XXX

page 432

AXOR One
Overhead shower 280 1jet with ceiling connection

#48493XXX

page 136

AXOR ShowerSphere
Overhead shower 370/220 2jet with adjustable shower arm

#39745XXX

page 417

Shower controls

AXOR ShowerSelect ID
Thermostat for concealed installation softsquare for 2 functions

#36754XXX

page 88

AXOR ShowerSolutions
Thermostatic module Select 530/90 for concealed installation for 3 functions

#18356XXX

page 527

Further complementary products

AXOR Universal Rectangular
Bath towel rail 600 mm

#42661XXX

page 554

AXOR Suite Basins & Bathtub
Wash bowl 400/400 without tap hole and overflow

#42003XXX

page 603

AXOR Drain
Finish set shower drain 700

#42520XXX

page 632

Basin

Bidet

Bath

Thermostatic mixers / valves / diverters

Shower sets

Complementary products

AXOR CITTERIO

DESIGN
–
ANTONIO CITTERIO

„Those who enjoy celebrating the daily ritual of washing should do so with beautiful objects such as AXOR Citterio.“ ANTONIO CITTERIO

AXOR Citterio

A contemporary classic

AXOR Citterio is an icon of modern bathroom design. Understated yet unmistakably luxurious, with distinctive flat surfaces that brilliantly reflect the light, AXOR Citterio celebrates the preciousness of water itself. With its balanced proportions and elegant geometries, the collection is perfectly suited to any bathroom ambiance.

Design: Antonio Citterio and Toan Nguyen

Characteristic design feature:

Monumental faucet design: Geometric precision and striking, flat surfaces – from spout to handles.

The designer's idea:

Luxury at second glance: Appreciate the value of water with this special faucet and experience the element more fully.

Special collection highlights:

/ Various handle versions: modern pin handle, classic cross handle, original lever handle and new, floating lever handle

/ Rhombic cut: The lever handle's exclusive surface pattern is a haptic and optical experience

/ The flatness of the spout is an especially striking feature of the collection

/ Extensive product range with different faucet heights, installation possibilities, versions with plate or single escutcheon

/ AXOR Citterio product history: 2003 collection launch, 2010 enhanced design, 2021 extension of the product portfolio. AXOR Citterio is the first of four AXOR collections designed in cooperation with Antonio Citterio. Today, AXOR Citterio is a classic in bathroom design.

→ Learn more about AXOR Citterio: axor-design.com

A monument at the wash basin

The AXOR Citterio collection offers a variety of product variants: pin, cross and lever handles as well as products with cover plates and escutcheons. Various installation types and diverse spout lenghts and faucet heights cover nearly every installation situation. In its geometric precision and monumentality, AXOR Citterio conveys the spirit of Italian neoclassical architecture. The comprehensive product range for wash basin, shower and bathtub enables endless individual solutions, all within a consistent design language.

Lever handle with surface pattern
The „rhombic cut" is a haptic and optical experience and exclusively available for the new lever handle

Striking handle design
Conscious control turns every interaction with water into a celebration

Fully integrated spray former
Emphasizes the immaculate design

Monumental design
Right angles meet rounded shapes and soft radii – characteristic of the collection's monumental design

Round escutcheons
Exciting contrast with the angular design of the faucet body

Striking pin handle:

/ Iconic handle with modern, technological enhanced joystick cartridge

/ The striking design creates a deeper awareness and appreciation of water

Lever handle:

/ „Floating" form continues the architectonic design language

/ Even more ergonomic, intuitive and easy to use

/ Offers precise control of water temperature and volume

/ Optional available with exclusive „rhombic cut"

Classic cross handles:

/ Timeless design, proven functionality and familiar mechanical operation

/ Underscore the classic air of the three-hole mixer version and offer direct and separate control of hot and cold water

/ Available with escutcheons or plate

A variety of products with perfect form

Single lever basin mixer 190 with pin handle and pop-up waste set in Brushed Gold Optic.

Three-hole basin mixer for concealed installation, wall-mounted, with spout 162 mm, lever handles and escutcheons in Polished Black Chrome.

Single lever basin mixer for concealed installation, wall-mounted, with flat lever handle, spout 220 mm and cover plate in Polished Gold Optic.

Single-hole lavatory faucet 160 with pin handle
in Brushed Nickel.

At the bathtub: a special radiance

The traditional, wall-mounted bathtub mixer with classic cross handles underscores the monumental design. The geometric precision and striking flatness of the products for the wash basin and shower is carried over to the bathtub.

Hot/cold inscriptions

/ The laser inscriptions underscore the high-quality look

Easy to switch outlets

/ Switch from bathtub spout to hand shower simply by pulling the diverter

Hand shower 120 3jet (# 26050000)

/ Included in scope of delivery

/ Spray modes: Rain, RainAir and WhirlAir

/ Including shower hose 1.25 m (# 28622000)

Traditional design

/ Classic cross handles for the traditional bathtub mixer for wall installation. Also available with lever handles

Single lever basin mixers for hand washbasins

Features of all variants

/ consists of: single lever basin mixer, waste set
/ maximum flow rate at 3 bar: 5 l/min
/ ceramic cartridge
/ suitable for continuous flow water heaters
/ pop-up waste set G 1¼
/ connection type: G ⅜ hose connections
/ connection dimension: DN15
/ EU taxonomy: max. 6 l/min – Substantial Contribution (SC) possible

80

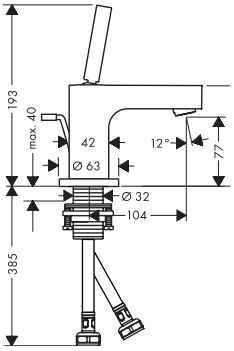

90

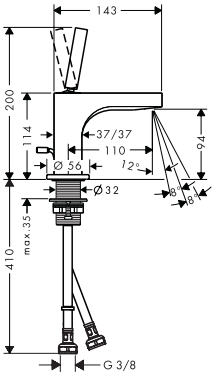

90

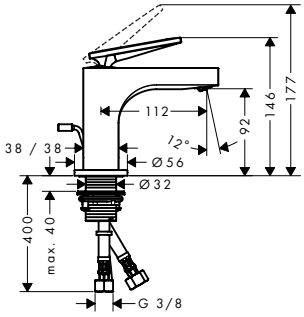

Special feature

EcoSmart

Technologies

Quick Clean | AirPower | Comfort Zone

Overview variants

ComfortZone	Projection (mm)	Spout height (mm)	Spray types	Handle version	Structure element	Finish	Code no.
80	104	77	normal spray	pin	without structure	Chrome	39015000
						Brushed Black Chrome	39015340
						AXOR FinishPlus*	39015XXX
90	112	92	laminar spray	pin	without structure	Chrome	39035000
						Brushed Black Chrome	39035340
						AXOR FinishPlus*	39035XXX
90	112	92	laminar spray	lever	without structure	Chrome	39022000
						Brushed Black Chrome	39022340
						AXOR FinishPlus*	39022XXX
90	112	92	laminar spray	lever	rhombic cut	Chrome	39001000
						Brushed Black Chrome	39001340
						AXOR FinishPlus*	39001XXX

Measurements within scale drawings are in mm.
Technical specifications and units of measure are subject to change.

Single lever basin mixers with pin handle

Features of all variants

/ consists of: single lever basin mixer, waste set
/ handle variant: pin handle
/ maximum flow rate at 3 bar: 5 l/min
/ ceramic cartridge
/ suitable for continuous flow water heaters
/ connection type: G ⅜ hose connections
/ connection dimension: DN15
/ EU taxonomy: max. 6 l/min – Substantial Contribution (SC) possible

110

160

280

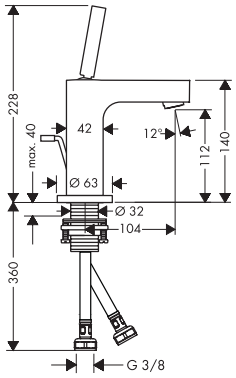

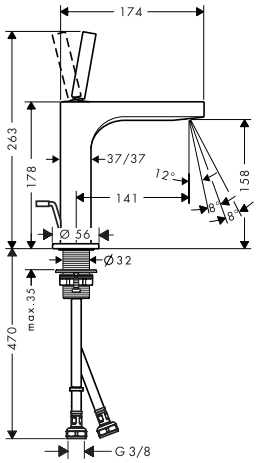

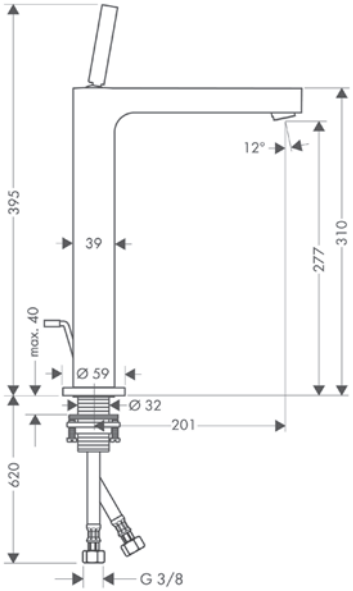

Special feature

Technologies

Overview variants

ComfortZone	Projection (mm)	Spout height (mm)	Spray types	Waste set	For wash bowls	Finish	Code no.
110	104	112	normal spray	pop-up	–	Chrome	39010000
						Brushed Black Chrome	39010340
						AXOR FinishPlus*	39010XXX
110	104	112	normal spray	non-closing	–	Chrome	39018000
						Brushed Black Chrome	39018340
						AXOR FinishPlus*	39018XXX
160	141	158	laminar spray	pop-up	–	Chrome	39031000
						Brushed Black Chrome	39031340
						AXOR FinishPlus*	39031XXX

For more information about this product, please see the next page.

*AXOR FinishPlus: For further AXOR FinishPlus surfaces please see the AXOR FinishPlus overview on page 44.

Single lever basin mixers with pin handle

Overview variants

ComfortZone	Projection (mm)	Spout height (mm)	Spray types	Waste set	For wash bowls	Finish	Code no.
160	141	158	laminar spray	non-closing	–	Chrome	39032000
						Brushed Black Chrome	39032340
						AXOR FinishPlus*	39032XXX
280	201	277	normal spray	pop-up	■	Chrome	39020000
						Brushed Black Chrome	39020340
						AXOR FinishPlus*	39020XXX

Single lever basin mixers with lever handle

Features of all variants

/ consists of: single lever basin mixer, waste set
/ handle variant: lever handle
/ maximum flow rate at 3 bar: 5 l/min
/ ceramic cartridge
/ suitable for continuous flow water heaters
/ connection type: G ⅜ hose connections
/ connection dimension: DN15
/ EU taxonomy: max. 6 l/min – Substantial Contribution (SC) possible

160

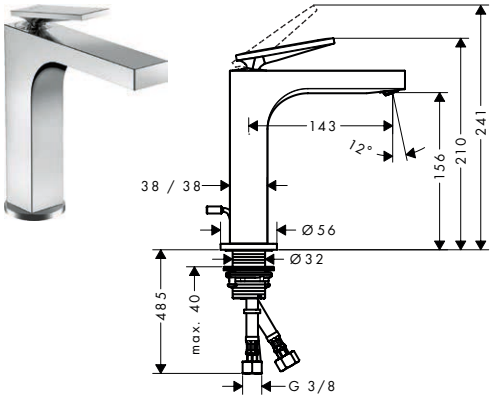

280 rhombic cut

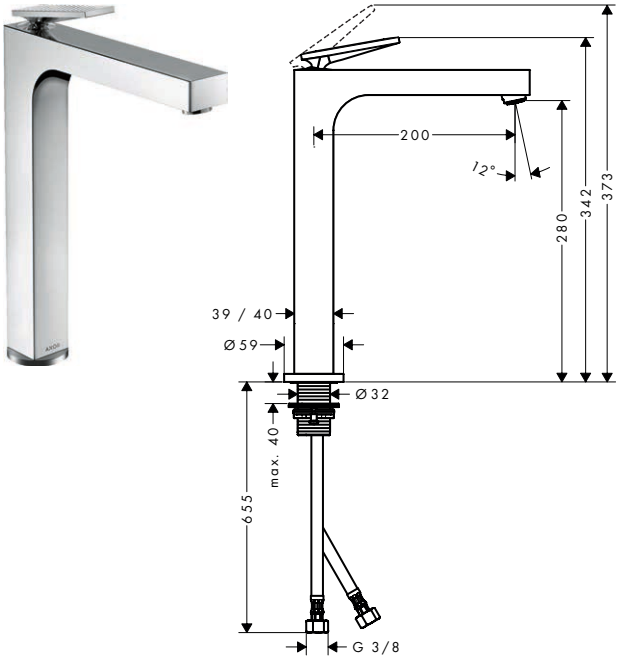

Special feature

Technologies

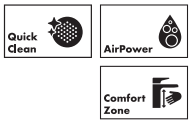

Overview variants

ComfortZone	Projection (mm)	Spout height (mm)	Spray types	Waste set	For wash bowls	Structure element	Finish	Code no.
160	143	156	laminar spray	pop-up	–	without structure	Chrome	39023000
							Brushed Black Chrome	39023340
							AXOR FinishPlus*	39023XXX
160	143	156	laminar spray	non-closing	–	without structure	Chrome	39024000
							Brushed Black Chrome	39024340
							AXOR FinishPlus*	39024XXX
160	143	156	laminar spray	pop-up	–	rhombic cut	Chrome	39071000
							Brushed Black Chrome	39071340
							AXOR FinishPlus*	39071XXX
160	143	156	laminar spray	non-closing	–	rhombic cut	Chrome	39081000
							Brushed Black Chrome	39081340
							AXOR FinishPlus*	39081XXX

Measurements within scale drawings are in mm.
Technical specifications and units of measure are subject to change.

Single lever basin mixers with lever handle

Overview variants

ComfortZone	Projection (mm)	Spout height (mm)	Spray types	Waste set	For wash bowls	Structure element	Finish	Code no.
280	200	280	normal spray	non-closing	■	without structure	Chrome	39021000
							Brushed Black Chrome	39021340
							AXOR FinishPlus*	39021XXX
280	200	280	normal spray	non-closing	■	rhombic cut	Chrome	39151000
							Brushed Black Chrome	39151340
							AXOR FinishPlus*	39151XXX

Single lever basin mixers

Features of all variants

/ consists of: single lever basin mixer, waste set
/ ComfortZone: 190
/ projection: 160 mm
/ spout height: 191 mm
/ handle variant: pin handle
/ spray type: normal spray
/ maximum flow rate at 3 bar: 5 l/min
/ ceramic cartridge
/ suitable for continuous flow water heaters
/ connection type: G ⅜ hose connections
/ connection dimension: DN15
/ handle position on the side: bottom-side at the base body (not suitable for wash bowls)
/ EU taxonomy: max. 6 l/min – Substantial Contribution (SC) possible

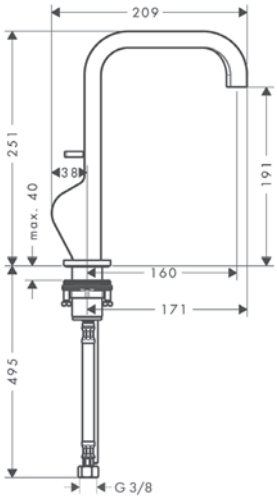

Special feature

EcoSmart

Technologies

AirPower

Comfort Zone

Overview variants

ComfortZone	Projection (mm)	Spout height (mm)	Waste set	Finish	Code no.
190	160	191	pop-up	Chrome	39034000
				Brushed Black Chrome	39034340
				AXOR FinishPlus*	39034XXX
190	160	191	non-closing	Chrome	39037000
				AXOR FinishPlus*	39037XXX

39037XXX This product is not available in the AXOR FinishPlus surfaces Polished and Brushed Black Chrome.

*AXOR FinishPlus: For further AXOR FinishPlus surfaces please see the AXOR FinishPlus overview on page 44.

Single lever basin mixers for concealed installation wall-mounted with plate

Features of all variants

/ consists of: single lever basin mixer for concealed installation wall-mounted, waste set
/ spray type: normal spray
/ maximum flow rate at 3 bar: 5 l/min
/ ceramic cartridge
/ suitable for continuous flow water heaters
/ non-closing waste set
/ connection type: basic set
/ connection dimension: DN15
/ handle can be positioned on the right or left, depending on the basic set installation
/ EU taxonomy: max. 6 l/min – Substantial Contribution (SC) possible

160

220

220 rhombic cut

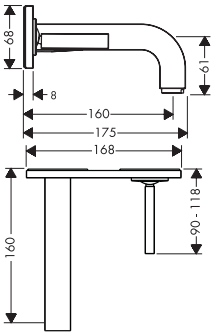

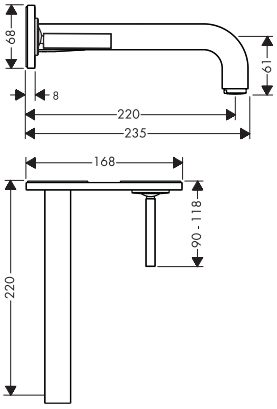

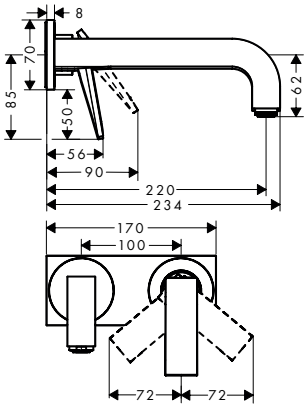

Special feature

Technologies

Overview variants

Projection (mm)	Handle version	Structure element	Finish	Code no.
160	pin	without structure	Chrome	39112000
			Brushed Black Chrome	39112340
			AXOR FinishPlus*	39112XXX
220	pin	without structure	Chrome	39115000
			Brushed Black Chrome	39115340
			AXOR FinishPlus*	39115XXX
220	lever	without structure	Chrome	39119000
			Brushed Black Chrome	39119340
			AXOR FinishPlus*	39119XXX
220	lever	rhombic cut	Chrome	39171000
			Brushed Black Chrome	39171340
			AXOR FinishPlus*	39171XXX

Required parts:		Code no.
	Basic set for single lever basin mixer for concealed installation wall-mounted	13623180

Optional parts:		Code no.
	Extension set 25 mm for single lever basin mixer wall-mounted	13586000

Measurements within scale drawings are in mm.
Technical specifications and units of measure are subject to change.

Single lever basin mixers for concealed installation wall-mounted with escutcheons

Features of all variants

/ consists of: single lever basin mixer for concealed installation wall-mounted, waste set
/ spray type: normal spray
/ maximum flow rate at 3 bar: 5 l/min
/ ceramic cartridge
/ suitable for continuous flow water heaters
/ non-closing waste set
/ connection type: basic set
/ connection dimension: DN15
/ handle can be positioned on the right or left, depending on the basic set installation
/ EU taxonomy: max. 6 l/min – Substantial Contribution (SC) possible

160

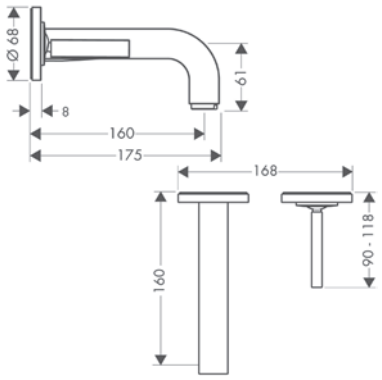

220

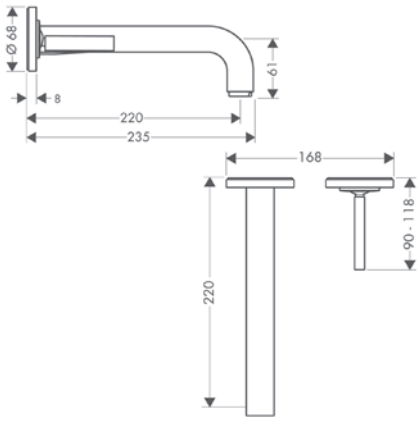

220 rhombic cut

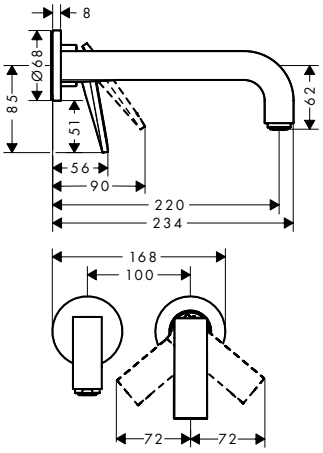

Special feature

EcoSmart

Technologies

Quick Clean

AirPower

Overview variants

Projection (mm)	Handle version	Structure element	Finish	Code no.
160	pin	without structure	Chrome	39113000
			Brushed Black Chrome	39113340
			AXOR FinishPlus*	39113XXX
220	pin	without structure	Chrome	39116000
			Brushed Black Chrome	39116340
			AXOR FinishPlus*	39116XXX
220	lever	without structure	Chrome	39121000
			Brushed Black Chrome	39121340
			AXOR FinishPlus*	39121XXX
220	lever	rhombic cut	Chrome	39181000
			Brushed Black Chrome	39181340
			AXOR FinishPlus*	39181XXX

Required parts:		Code no.
	Basic set for single lever basin mixer for concealed installation wall-mounted	13623180

Optional parts:		Code no.
	Extension set 25 mm for single lever basin mixer wall-mounted	13586000

*AXOR FinishPlus: For further AXOR FinishPlus surfaces please see the AXOR FinishPlus overview on page 44.

3-hole basin mixers with plate

Features of all variants

/ consists of: 3-hole basin mixer, waste set
/ ComfortZone: 170
/ projection: 140 mm
/ spout height: 166 mm
/ spray type: normal spray
/ maximum flow rate at 3 bar: 5 l/min
/ suitable for continuous flow water heaters
/ pop-up waste set G 1¼
/ connection type: G ⅜ hose connections
/ connection dimension: DN15
/ for use only at flat, plain surfaces
/ EU taxonomy: max. 6 l/min – Substantial Contribution (SC) possible

lever handle

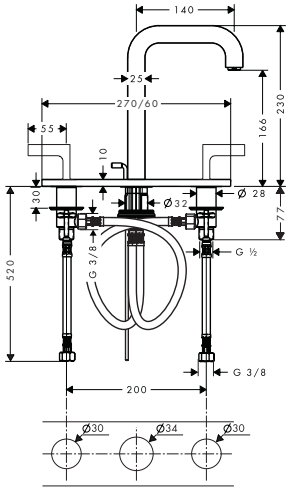

cross handle

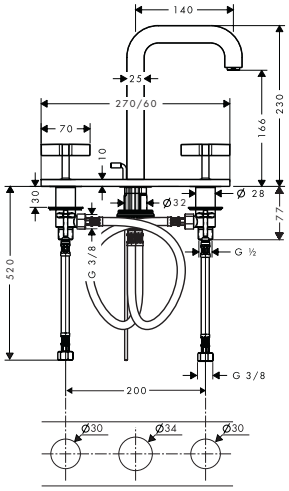

Special feature

EcoSmart

Technologies

AirPower

Comfort Zone

Overview variants

ComfortZone	Projection (mm)	Spout height (mm)	Handle version	Finish	Code no.
170	140	166	lever	Chrome	39136000
				Brushed Black Chrome	39136340
				AXOR FinishPlus*	39136XXX
170	140	166	cross	Chrome	39134000
				Brushed Black Chrome	39134340
				AXOR FinishPlus*	39134XXX

Optional parts:		Code no.
	Hose extension set for 3-hole basin mixer	38959000

3-hole basin mixers with escutcheons

Features of all variants

/ consists of: 3-hole basin mixer, waste set
/ ComfortZone: 170
/ projection: 140 mm
/ spout height: 166 mm
/ spray type: normal spray
/ maximum flow rate at 3 bar: 5 l/min
/ suitable for continuous flow water heaters
/ pop-up waste set G 1¼
/ connection type: G ⅜ hose connections
/ connection dimension: DN15
/ EU taxonomy: max. 6 l/min – Substantial Contribution (SC) possible

lever handle

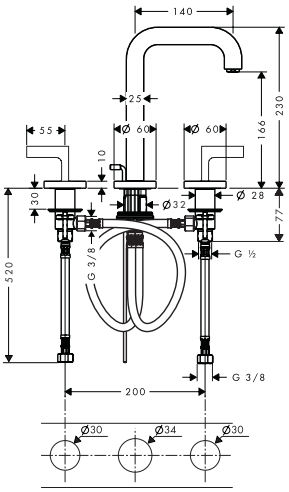

cross handle

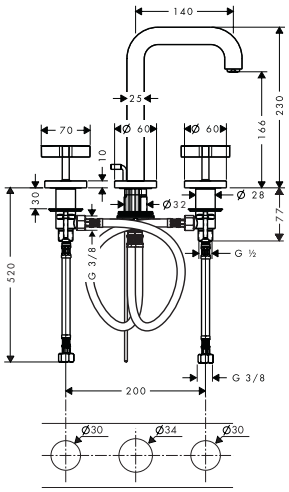

Special feature

EcoSmart

Technologies

AirPower

Comfort Zone

Measurements within scale drawings are in mm.
Technical specifications and units of measure are subject to change.

3-hole basin mixers with escutcheons

Overview variants

ComfortZone	Projection (mm)	Spout height (mm)	Handle version	Finish	Code no.
170	140	166	lever	Chrome	39135000
				Brushed Black Chrome	39135340
				AXOR FinishPlus*	39135XXX
170	140	166	cross	Chrome	39133000
				Brushed Black Chrome	39133340
				AXOR FinishPlus*	39133XXX

Optional parts:	Code no.
Hose extension set for 3-hole basin mixer	38959000

3-hole basin mixers for concealed installation wall-mounted with plate

Features of all variants

/ consists of: 3-hole basin mixer for concealed installation wall-mounted, waste set
/ spray type: normal spray
/ maximum flow rate at 3 bar: 5 l/min
/ suitable for continuous flow water heaters
/ non-closing waste set
/ connection type: basic set
/ connection dimension: DN15
/ EU taxonomy: max. 6 l/min – Substantial Contribution (SC) possible

166 with cross handles

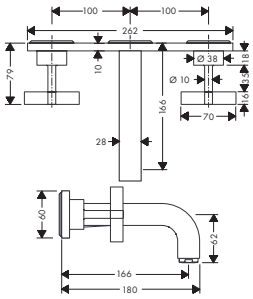

226 with lever handles

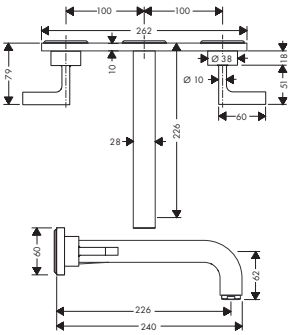

226 with cross handles

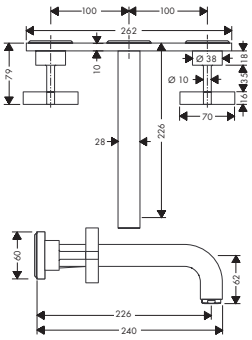

Special feature

EcoSmart

Technologies

Quick Clean

AirPower

Overview variants

Projection (mm)	Handle version	Finish	Code no.
166	cross	Chrome	39314000
		Brushed Black Chrome	39314340
		AXOR FinishPlus*	39314XXX
226	lever	Chrome	39148000
		Brushed Black Chrome	39148340
		AXOR FinishPlus*	39148XXX
226	cross	Chrome	39144000
		Brushed Black Chrome	39144340
		AXOR FinishPlus*	39144XXX

For more information about this product, please see the next page.

*AXOR FinishPlus: For further AXOR FinishPlus surfaces please see the AXOR FinishPlus overview on page 44.

3-hole basin mixers for concealed installation wall-mounted with plate

Required parts:		Code no.
	Basic set for 3-hole basin mixer for concealed installation wall-mounted	10303180

Optional parts:		Code no.
	Seal	96383000
	AXOR Starck Extension set 25 mm for basic set for 3-hole basin mixer wall-mounted	96259000

3-hole basin mixers for concealed installation wall-mounted with escutcheons

Features of all variants

/ consists of: 3-hole basin mixer for concealed installation wall-mounted, waste set
/ spray type: normal spray
/ maximum flow rate at 3 bar: 5 l/min
/ suitable for continuous flow water heaters
/ non-closing waste set
/ connection type: basic set
/ connection dimension: DN15
/ EU taxonomy: max. 6 l/min – Substantial Contribution (SC) possible

162 with lever handles

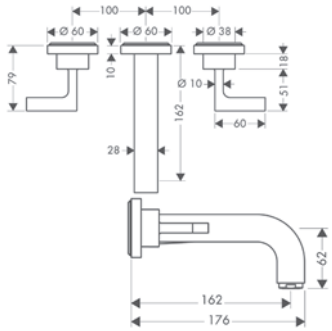

222 with lever handles

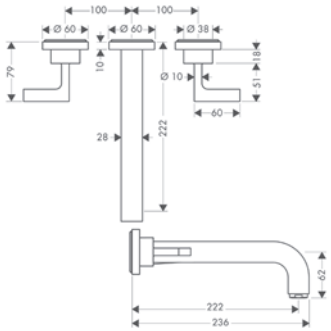

222 with cross handles

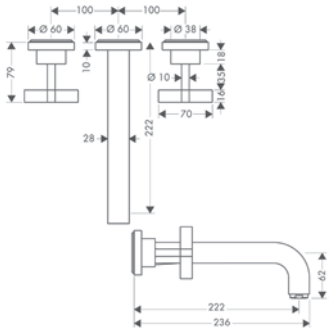

Special feature

Technologies

Overview variants

Projection (mm)	Handle version	Finish	Code no.
162	lever	Chrome	39315000
		Brushed Black Chrome	39315340
		AXOR FinishPlus*	39315XXX
162	cross	Chrome	39313000
		Brushed Black Chrome	39313340
		AXOR FinishPlus*	39313XXX
222	lever	Chrome	39147000
		Brushed Black Chrome	39147340
		AXOR FinishPlus*	39147XXX
222	cross	Chrome	39143000
		Brushed Black Chrome	39143340
		AXOR FinishPlus*	39143XXX

Required parts:		Code no.
	Basic set for 3-hole basin mixer for concealed installation wall-mounted	10303180

Measurements within scale drawings are in mm.
Technical specifications and units of measure are subject to change.

3-hole basin mixers for concealed installation wall-mounted with escutcheons

Optional parts:		Code no.
	Seal	96383000
	AXOR Starck Extension set 25 mm for basic set for 3-hole basin mixer wall-mounted	96259000

Single lever bidet mixers

Features of all variants

/ consists of: single lever bidet mixer, waste set
/ aerator with ball pivot
/ spray type: laminar spray
/ maximum flow rate at 3 bar: 7,2 l/min
/ ceramic cartridge
/ suitable for continous flow water heaters
/ pop-up waste set G 1¼
/ connection type: G ⅜ hose connections
/ connection dimension: DN15

pin handle

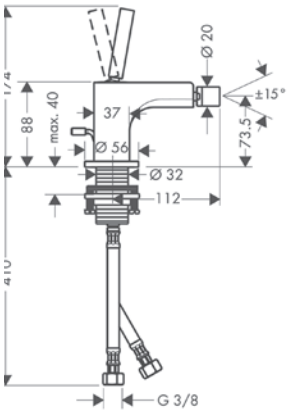

lever handle

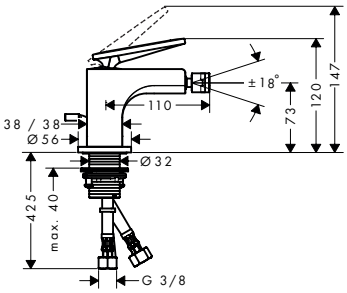

rhombic cut

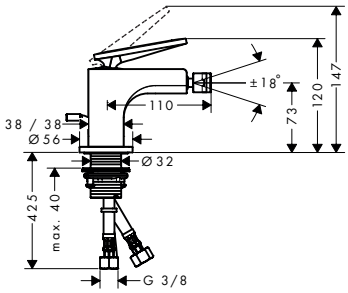

Overview variants

Projection (mm)	Spout height (mm)	Handle version	Structure element	Finish	Code no.
112	74	pin	without structure	Chrome	39210000
				Brushed Black Chrome	39210340
				AXOR FinishPlus*	39210XXX
110	73	lever	without structure	Chrome	39214000
				Brushed Black Chrome	39214340
				AXOR FinishPlus*	39214XXX
112	73	lever	rhombic cut	Chrome	39201000
				Brushed Black Chrome	39201340
				AXOR FinishPlus*	39201XXX

*AXOR FinishPlus: For further AXOR FinishPlus surfaces please see the AXOR FinishPlus overview on page 44.

Single lever bath mixers floor-standing

Features of all variants

/ consists of: single lever bath mixer floor standing, baton hand shower, shower holder, shower hose
/ 2 functions
/ projection: 200 mm
/ spray type mixer: normal spray
/ diverter with automatic resetting
/ protected against backflow, according to DIN EN 1717
/ connection dimension: DN15
/ connection type: basic set
/ deck mounted
/ min. operating pressure: 1 bar
/ max. operating pressure: 10 bar
/ spray type hand shower: Rain, MonoRain

pin handle

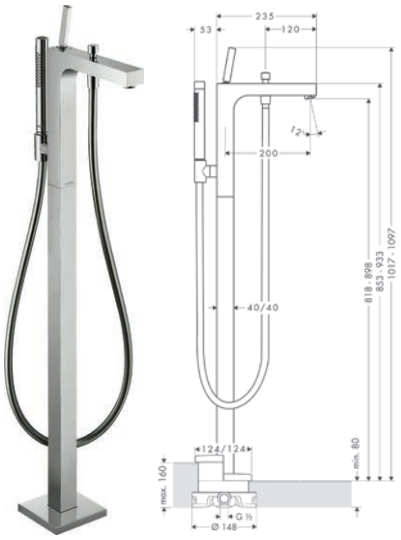

lever handle

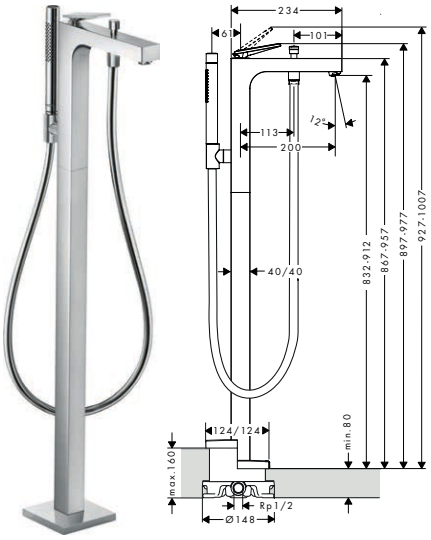

rhombic cut

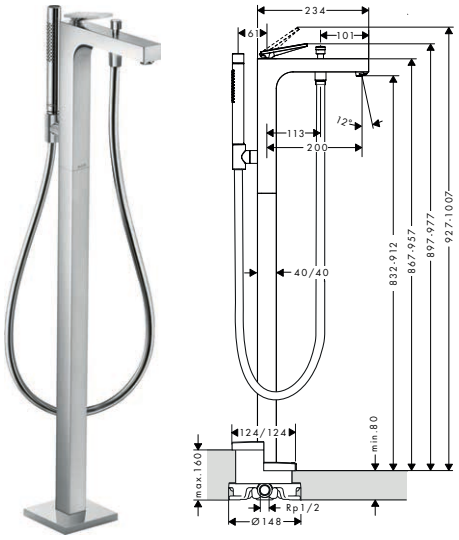

Technologies

Spray types

Overview variants

Projection (mm)	Handle version	Structure element	Max. flow rate at 3 bar (l/min)	Finish	Code no.
200	pin	without structure	22	Chrome	39451000
				Brushed Black Chrome	39451340
				AXOR FinishPlus*	39451XXX
200	lever	without structure	20	Chrome	39440000
				Brushed Black Chrome	39440340
				AXOR FinishPlus*	39440XXX
200	lever	rhombic cut	20	Chrome	39471000
				Brushed Black Chrome	39471340
				AXOR FinishPlus*	39471XXX

Required parts:		Code no.
	Basic set for mixers floor-standing	10452180

Optional parts:		Code no.
	Sealing foil for basic set bath mixer floor-standing	96441000
	AXOR Starck Extension 60 mm for pipe	97686000

Measurements within scale drawings are in mm.
Technical specifications and units of measure are subject to change.

Single lever bath mixers for concealed installation

Features of all variants

/ 2 functions
/ ceramic cartridge
/ temperature limitation adjustable
/ diverter with automatic resetting
/ with silencer
/ suitable for continous flow water heaters
/ connection type: basic set
/ wall-mounted
/ min. operating pressure: 1 bar
/ max. operating pressure: 10 bar

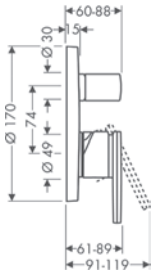

Overview variants

Security combination EN 1717	Max. flow rate at 3 bar (l/min)	Finish	Code no.
–	29	Chrome	39455000
		Brushed Black Chrome	39455340
		AXOR FinishPlus*	39455XXX
■	25	Chrome	39457000
		Brushed Black Chrome	39457340
		AXOR FinishPlus*	39457XXX

Required parts (choose one):			Code no.
Option 1		AXOR iBox universal 2 Basic set	01400180
+		Adapter plate for iBox universal 2	13588000
Option 2		AXOR iBox universal Basic set	01700180

3-hole bath mixers for concealed installation for wall mounting with plate

Features of all variants

/ consists of: 3-hole bath mixer, hand shower, shower holder, shower hose
/ 2 functions
/ projection: 222 mm
/ spray type mixer: normal spray
/ maximum flow rate at 3 bar: 22,5 l/min
/ flow rate for bath spout at 3 bar: 22,5 l/min
/ flow rate of hand shower at 3 bar: 20 l/min
/ ceramic valves hot/cold 90°
/ diverter with automatic resetting
/ non-return valve
/ connection dimension: DN15
/ connection type: basic set
/ wall-mounted
/ min. operating pressure: 1 bar
/ max. operating pressure: 10 bar
/ no additional maintenance opening required

lever handle

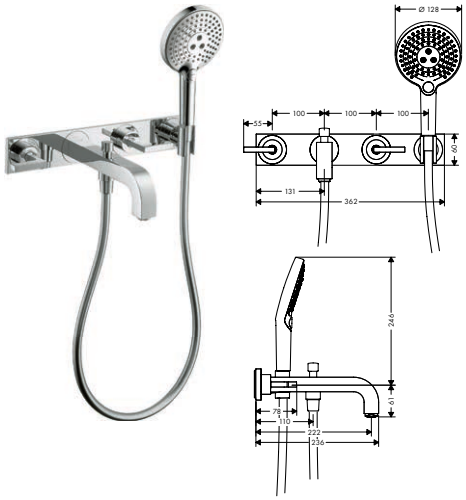

cross handle

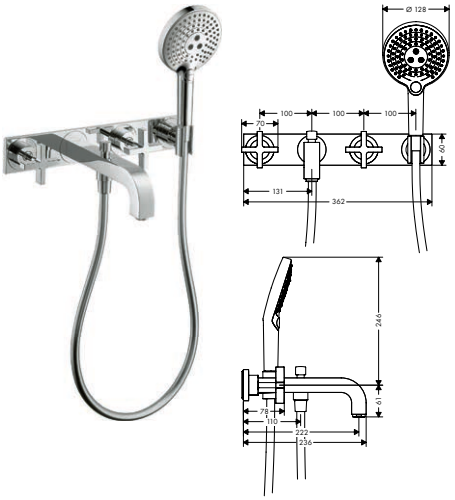

Technologies

Spray types

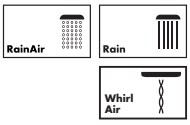

For more information about this product, please see the next page.

*AXOR FinishPlus: For further AXOR FinishPlus surfaces please see the AXOR FinishPlus overview on page 44.

3-hole bath mixers for concealed installation for wall mounting with plate

Overview variants

Projection (mm)	Handle version	Finish	Code no.
222	lever	Chrome	39442000
		Brushed Black Chrome	39442340
		AXOR FinishPlus*	39442XXX
222	cross	Chrome	39441000
		Brushed Black Chrome	39441340
		AXOR FinishPlus*	39441XXX

Required parts:		Code no.
	Basic set for 3-hole basin mixer for concealed installation wall-mounted	10303180

Optional parts:		Code no.
	Seal	96383000
	AXOR Starck Extension set 25 mm for basic set for 3-hole basin mixer wall-mounted	96259000

3-hole bath mixers for concealed installation for wall mounting with escutcheons

Features of all variants

/ consists of: 3-hole bath mixer, hand shower, shower holder, shower hose
/ 2 functions
/ projection: 222 mm
/ spray type mixer: normal spray
/ maximum flow rate at 3 bar: 22,5 l/min
/ flow rate for bath spout at 3 bar: 22,5 l/min
/ flow rate of hand shower at 3 bar: 20 l/min
/ ceramic valves hot/cold 90°
/ diverter with automatic resetting
/ connection dimension: DN15
/ connection type: basic set
/ wall-mounted
/ min. operating pressure: 1 bar
/ max. operating pressure: 10 bar
/ no additional maintenance opening required

lever handle

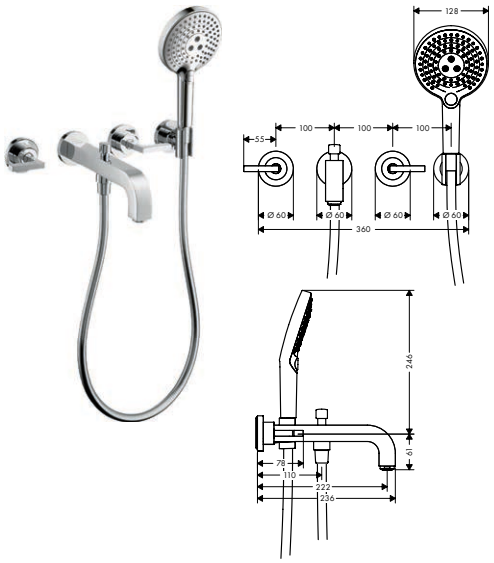

cross handle

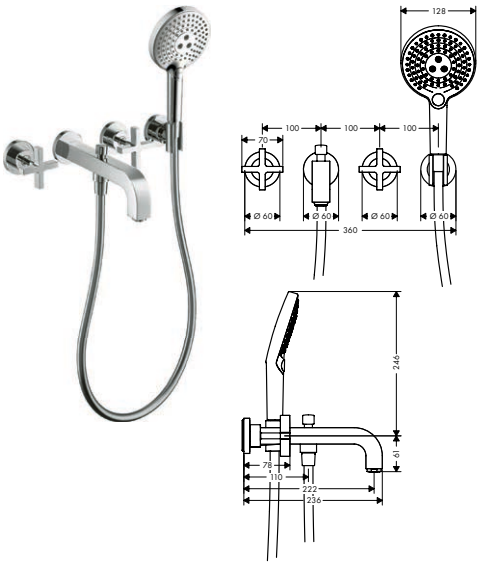

Technologies

Spray types

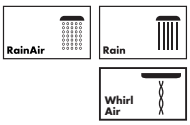

Overview variants

Projection (mm)	Handle version	Finish	Code no.
222	lever	Chrome	39448000
		Brushed Black Chrome	39448340
		AXOR FinishPlus*	39448XXX
222	cross	Chrome	39447000
		Brushed Black Chrome	39447340
		AXOR FinishPlus*	39447XXX

Required parts:		Code no.
	Basic set for 3-hole basin mixer for concealed installation wall-mounted	10303180

Measurements within scale drawings are in mm.
Technical specifications and units of measure are subject to change.

3-hole bath mixers for concealed installation for wall mounting with escutcheons

Optional parts:		Code no.
	Seal	96383000
	AXOR Starck Extension set 25 mm for basic set for 3-hole basin mixer wall-mounted	96259000

Bath spout

Features of all variants

/ 1 function
/ projection: 165 mm
/ maximum flow rate at 3 bar: 21 l/min
/ connection dimension: device connection DN20
/ spray type: normal spray

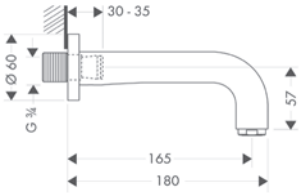

Technologies

Projection (mm)	Finish	Code no.
165	Chrome	39410000
	Brushed Black Chrome	39410340
	AXOR FinishPlus*	39410XXX

2-hole rim mounted thermostatic bath mixer

Features of all variants

/ 2 functions
/ Safety stop at 40 °C
/ temperature limitation adjustable
/ suitable for remote spout
/ connection dimension: DN15
/ connection type: basic set
/ rim mounted

lever handle

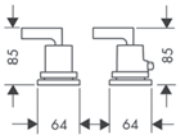

cross handle

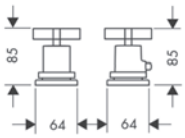

Special feature

Technologies

Overview variants

Handle version	Finish	Code no.
lever	Chrome	39482000
	Brushed Black Chrome	39482340
	AXOR FinishPlus*	39482XXX
cross	Chrome	39480000
	Brushed Black Chrome	39480340
	AXOR FinishPlus*	39480XXX

For more information about this product, please see the next page.

*AXOR FinishPlus: For further AXOR FinishPlus surfaces please see the AXOR FinishPlus overview on page 44.

2-hole rim mounted thermostatic bath mixer

Required parts:		Code no.
	Basic set for 2-hole rim mounted thermostatic bath mixer	15486180

Optional parts:		Code no.
	Flexible connection tube 800 mm	58308000
	Connection tube set for 2-hole rim mounted thermostatic bath mixer	13089000

Rim mounted bath set with hand shower

Features

/ consists of: hand shower, shower holder, shower hose, Secubox, Secuflex hose brake, hose insert
/ suitable for for installation on bath rim or tile surround (no mounting plate available)
/ connection dimension: DN15
/ drilling diameter on bath tub: Ø 50 mm
/ maximum pull-out length of hand shower: 1.10 m

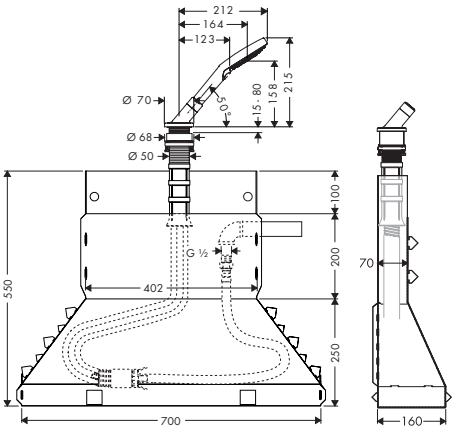

Finish	Code no.
Chrome	19418000
Brushed Bronze	19418140
Brushed Black Chrome	19418340
Polished Gold Optic	19418990
AXOR FinishPlus*	19418XXX

Optional parts:		Code no.
	Secuflex insert extension	98806000

Measurements within scale drawings are in mm.
Technical specifications and units of measure are subject to change.

3-hole rim mounted bath mixer with cross handles

Features of all variants

/ 1 function
/ projection: 190 mm
/ spray type mixer: normal spray
/ maximum flow rate at 3 bar: 21,5 l/min
/ connection dimension: DN15
/ connection type: basic set
/ installation on bath rim
/ min. operating pressure: 1 bar
/ max. operating pressure: 10 bar
/ no additional maintenance opening required

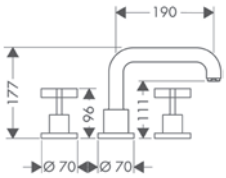

Technologies

Projection (mm)	Finish	Code no.
190	Chrome	39436000
	Brushed Black Chrome	39436340
	AXOR FinishPlus*	39436XXX

Required parts:	Code no.
Basic set for 3-hole rim mounted bath mixer	15484180

4-hole rim mounted bath mixers

Features of all variants

/ consists of: 4-hole rim mounted bath mixer, hand shower, shower hose, shower holder
/ 2 functions
/ projection: 190 mm
/ spray type mixer: normal spray
/ maximum pull-out length of hand shower: 1.10 m
/ maximum flow rate at 3 bar: 21 l/min
/ flow rate for bath spout at 3 bar: 21 l/min
/ flow rate of hand shower at 3 bar: 18 l/min
/ ceramic valves hot/cold 90°
/ diverter with automatic resetting
/ non-return valve
/ connection dimension: DN15
/ connection type: basic set
/ min. operating pressure: 1 bar
/ max. operating pressure: 10 bar
/ no additional maintenance opening required
/ spray type hand shower: Rain, RainAir, WhirlAir

lever handle

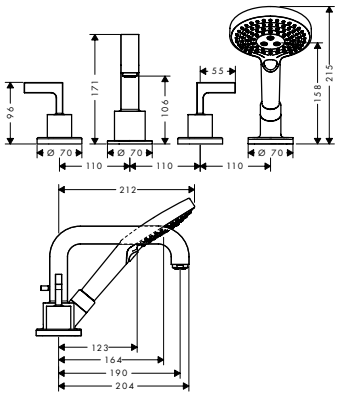

cross handle

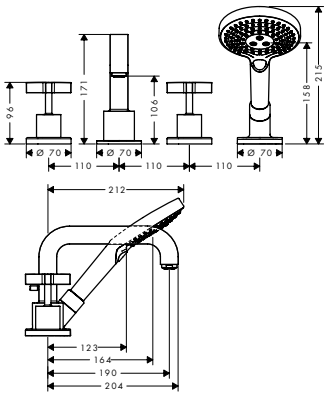

Technologies

Spray types

Overview variants

Projection (mm)	Handle version	Finish	Code no.
190	lever	Chrome	39446000
		Brushed Black Chrome	39446340
		AXOR FinishPlus*	39446XXX
190	cross	Chrome	39445000
		Brushed Black Chrome	39445340
		AXOR FinishPlus*	39445XXX

For more information about this product, please see the next page.

*AXOR FinishPlus: For further AXOR FinishPlus surfaces please see the AXOR FinishPlus overview on page 44.

4-hole rim mounted bath mixers

Required parts:	Code no.
Basic set for 4-hole rim mounted bath mixer	15480180

Optional parts:	Code no.
Secuflex insert extension	98806000

4-hole tile mounted bath mixers

Features of all variants

/ consists of: 4-hole tile mounted bath mixer, hand shower, shower holder, shower hose
/ 2 functions
/ projection: 190 mm
/ spray type mixer: normal spray
/ maximum pull-out length of hand shower: 1.10 m
/ maximum flow rate at 3 bar: 21 l/min
/ ceramic valves hot/cold 90°
/ diverter with automatic resetting
/ non-return valve
/ connection dimension: DN15
/ connection type: basic set
/ tile mounted
/ min. operating pressure: 1 bar
/ max. operating pressure: 10 bar
/ no additional maintenance opening required

lever handle

cross handle

Technologies

Spray types

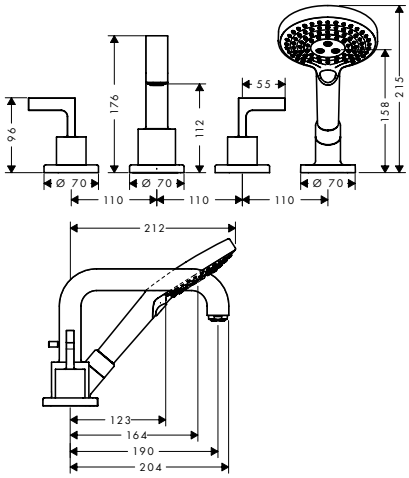

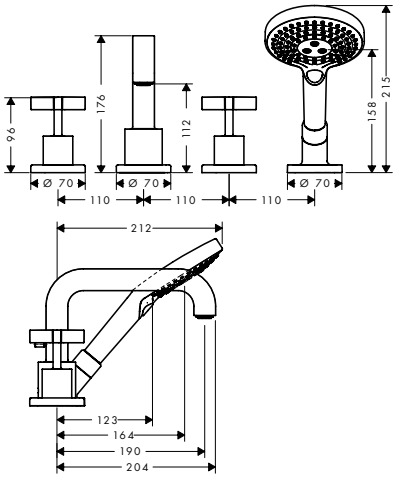

Overview variants

Projection (mm)	Handle version	Finish	Code no.
190	lever	Chrome	39454000
		Brushed Black Chrome	39454340
		AXOR FinishPlus*	39454XXX
190	cross	Chrome	39453000
		Brushed Black Chrome	39453340
		AXOR FinishPlus*	39453XXX

Required parts:	Code no.
Basic set for 4-hole tile mounted bath mixer	15481180

Optional parts:	Code no.
Secuflex insert extension	98806000

Measurements within scale drawings are in mm.
Technical specifications and units of measure are subject to change.

Single lever shower mixer for concealed installation with lever handle

Features

/ 1 function
/ maximum flow rate at 3 bar: 29 l/min
/ ceramic cartridge
/ temperature limitation adjustable
/ with silencer
/ suitable for continous flow water heaters
/ min. operating pressure: 1 bar
/ max. operating pressure: 10 bar
/ connection type: basic set

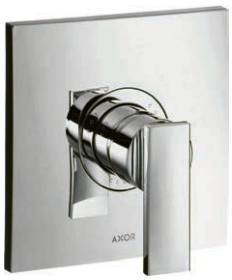

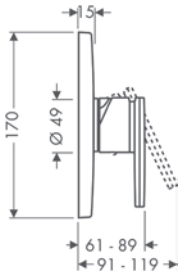

Finish	Code no.
Chrome	39655000
Brushed Black Chrome	39655340
AXOR FinishPlus*	39655XXX

Required parts (choose one):			Code no.
Option 1		AXOR iBox universal 2 Basic set	01400180
+		Adapter plate for iBox universal 2	13588000
Option 2		AXOR iBox universal Basic set	01700180

Porter unit 120/120 with baton hand shower 2jet and shower hose

Features of all variants

/ consists of: porter unit, baton hand shower, shower holder, shower hose
/ shower head size: 68 x 24 mm
/ spray type: Rain, MonoRain
/ maximum flow rate at 3 bar: 16,2 l/min
/ minimum flow pressure: 1 bar
/ operating pressure: min. 1 bar/max. 10 bar
/ in a joined installation (10 mm distance), the basic set no.28486180 must be used
/ in a joined installation (10 mm distance) we recommend for perfect handling only the horizontal installation
/ in a freely-arranged installation (distance greater than 10 mm), no basic set is required
/ for shower hoses with conical or cylindrical nut on both sides
/ shower hose length: 1250 mm
/ with non-return valve
/ integrated support function
/ wall mounting: screw fastening
/ rinseable filter washer

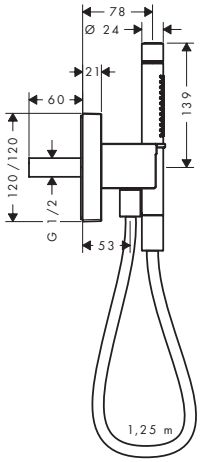

Spray types

Shower hose length (mm)	Number of sprays	Spray types	Function from (l/min)	Max. flow rate at 3 bar (l/min)	Min. flow pressure (bar)	Finish	Code no.
1250	2	Rain, MonoRain	9.2	16.2	1	Chrome	12626000
						Brushed Bronze	12626140
						Brushed Black Chrome	12626340
						Polished Gold Optic	12626990
						AXOR FinishPlus*	12626XXX

Optional parts:		Code no.
	AXOR ShowerSolutions Basic set for shower module 120/120 for concealed installation	28486180

*AXOR FinishPlus: For further AXOR FinishPlus surfaces please see the AXOR FinishPlus overview on page 44.

Shower holder round

Features

/ fixed holding position
/ for shower hoses with conical nut
/ material: metal
/ dimensions: 60 x 60 x 65 mm (HxWxD)
/ diameter drill hole: 6 mm
/ 2 drill holes
/ conical mount

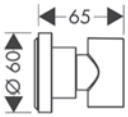

Finish	Code no.
Chrome	39525000
Brushed Bronze	39525140
Brushed Black Chrome	39525340
Polished Gold Optic	39525990
AXOR FinishPlus*	39525XXX

Thermostats HighFlow for concealed installation

Features of all variants

/ 1 function
/ thermostat cartridge
/ maximum flow rate at 3 bar: 59 l/min
/ min. operating pressure: 1 bar
/ max. operating pressure: 10 bar
/ Safety stop at 40 °C
/ temperature limitation adjustable
/ with silencer
/ connection type: basic set

lever handle

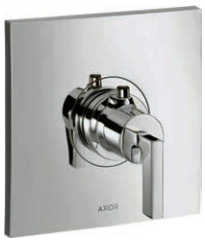

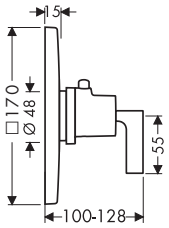

cross handle

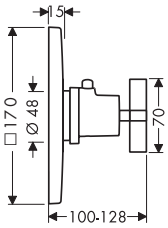

Technologies

Overview variants

Handle version	Finish	Code no.
lever	Chrome	39711000
	Brushed Black Chrome	39711340
	AXOR FinishPlus*	39711XXX
cross	Chrome	39716000
	Brushed Black Chrome	39716340
	AXOR FinishPlus*	39716XXX

Required parts (choose one):			Code no.
Option 1		AXOR iBox universal 2 Basic set	01400180
+		Adapter plate for iBox universal 2	13588000
Option 2		AXOR iBox universal Basic set	01700180

Measurements within scale drawings are in mm.
Technical specifications and units of measure are subject to change.

Thermostats for concealed installation with shut-off valve

Features of all variants

/ 1 function
/ thermostat cartridge, ceramic valves 90°
/ maximum flow rate at 3 bar: 26 l/min
/ min. operating pressure: 1 bar
/ max. operating pressure: 10 bar
/ Safety stop at 40 °C
/ temperature limitation adjustable
/ with silencer
/ connection type: basic set

lever handle

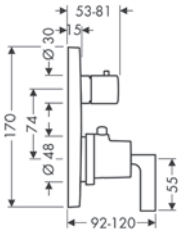

cross handle

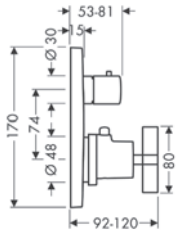

Special feature

Technologies

Overview variants

Handle version	Finish	Code no.
lever	Chrome	39700000
	Brushed Black Chrome	39700340
	AXOR FinishPlus*	39700XXX
cross	Chrome	39705000
	Brushed Black Chrome	39705340
	AXOR FinishPlus*	39705XXX

Required parts (choose one):			Code no.
Option 1		AXOR iBox universal 2 Basic set	01400180
+		Adapter plate for iBox universal 2	13588000
Option 2		AXOR iBox universal Basic set	01700180

*AXOR FinishPlus: For further AXOR FinishPlus surfaces please see the AXOR FinishPlus overview on page 44.

Thermostats for concealed installation with shut-off and diverter valve

Features of all variants

/ 2 functions
/ thermostat cartridge, shut-off valve
/ flow rate upper outlet: 25 l/min
/ flow rate lower outlet: 29 l/min
/ maximum flow rate at 3 bar: 29 l/min
/ min. operating pressure: 1 bar
/ max. operating pressure: 10 bar
/ Safety stop at 40 °C
/ temperature limitation adjustable
/ with silencer
/ connection type: basic set

lever handle

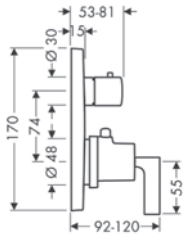

cross handle

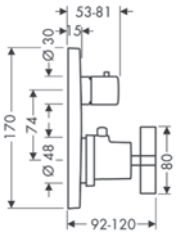

Special feature

Technologies

Overview variants

	Handle version	Finish	Code no.
	lever	Chrome	39720000
		Brushed Black Chrome	39720340
		AXOR FinishPlus*	39720XXX
	cross	Chrome	39725000
		Brushed Black Chrome	39725340
		AXOR FinishPlus*	39725XXX

Required parts (choose one):			Code no.
Option 1		AXOR iBox universal 2 Basic set	01400180
+		Adapter plate for iBox universal 2	13588000
Option 2		AXOR iBox universal Basic set	01700180

Shut-off valves for concealed installation

Features of all variants

/ connection type: DN15/DN20
/ noise class: II

lever handle

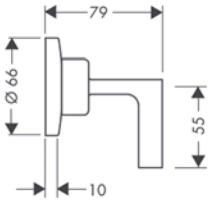

cross handle

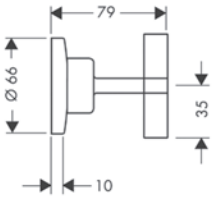

Overview variants

	Handle version	Finish	Code no.
	lever	Chrome	39960000
		Brushed Black Chrome	39960340
		AXOR FinishPlus*	39960XXX
	cross	Chrome	39965000
		Brushed Black Chrome	39965340
		AXOR FinishPlus*	39965XXX

Measurements within scale drawings are in mm.
Technical specifications and units of measure are subject to change.

Shut-off valves for concealed installation

Required parts (choose one):		Code no.
	Basic set 130 l/min for shut-off valve for concealed installation spindle	16970180
	Basic set 52 l/min for shut-off valve for concealed installation spindle	16973180
	Basic set 40 l/min for shut-off valve for concealed installation ceramic	16974180

Optional parts:		Code no.
	Extension set 25 mm for shut-off/ diverter valve Trio-/ Quattro	92990000

Shut-off/diverter valves for concealed installation

Features of all variants

/ connection dimension: DN20

lever handle

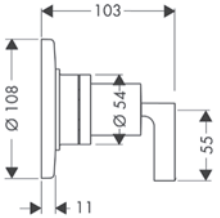

cross handle

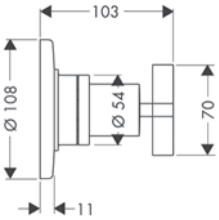

Overview variants

Handle version	Finish	Code no.
lever	Chrome	39920000
	Brushed Black Chrome	39920340
	AXOR FinishPlus*	39920XXX
cross	Chrome	39925000
	Brushed Black Chrome	39925340
	AXOR FinishPlus*	39925XXX

Required parts (choose one):		Code no.
	Basic set for Quattro four-way diverter valve for concealed installation	16930180
	Basic set for shut-off/ diverter valve Trio for concealed installation	16982180

Optional parts:		Code no.
	Extension set 25 mm for shut-off/ diverter valve Trio-/ Quattro	92990000

*AXOR FinishPlus: For further AXOR FinishPlus surfaces please see the AXOR FinishPlus overview on page 44.

Wall outlets with non-return valve

Features of all variants

/ connection type: DN15
/ hose connection DN15/DN20
/ with non-return valve

lever handle

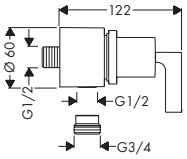

cross handle

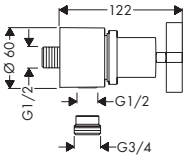

Overview variants

Handle version	Finish	Code no.
lever	Chrome	39882000
	Brushed Black Chrome	39882340
	AXOR FinishPlus*	39882XXX
cross	Chrome	39883000
	Brushed Black Chrome	39883340
	AXOR FinishPlus*	39883XXX

Shower set 0.90 m with hand shower 120 3jet

Features of all variants

/ consists of: hand shower, shower bar, shower hose, slider
/ shower head size: 120 mm
/ spray type: Rain, RainAir, WhirlAir
/ convenient spray selection via Select button
/ QuickClean: Limescale deposits can simply be rubbed off with your finger
/ inclination angle can be adjusted by 30°
/ flow rate Rain spray at 3 bar: 13,3 l/min
/ maximum flow rate at 3 bar: 13,4 l/min
/ minimum flow pressure: 1,4 bar
/ operating pressure: min. 1 bar/max. 6 bar
/ support for shower hose with conical nuts
/ wall supports of metal
/ profile pipe: round
/ shower bar diameter: 22 mm
/ drilling distance: 915 mm
/ pivot connector prevents hose from tangling

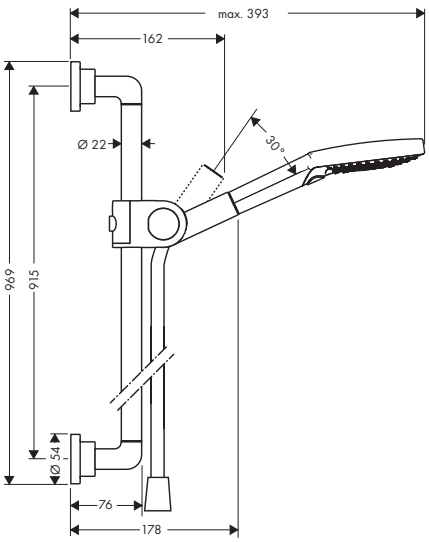

Technologies

Spray types

Drilling distance (mm)	Shower head size	Spray types	Function from (l/min)	Max. flow rate at 3 bar (l/min)	Min. flow pressure (bar)	Select	Finish	Code no.
915	120	Rain, RainAir, WhirlAir	7.6	13.4	1.4	■	Chrome	27991000
							Brushed Black Chrome	27991340
							AXOR FinishPlus*	27991XXX

Measurements within scale drawings are in mm.
Technical specifications and units of measure are subject to change.

Shower bar 0.90 m with shower hose 1.60 m

Features of all variants

/ consists of: shower bar, shower hose, slider
/ pivot connector prevents hose from tangling
/ pipe length: 969 mm
/ shower bar diameter: 22 mm
/ profile pipe: round
/ drilling distance: 915 mm
/ shower hose length: 1600 mm
/ slider with locking mechanism
/ wall supports of metal
/ metal hand shower holder

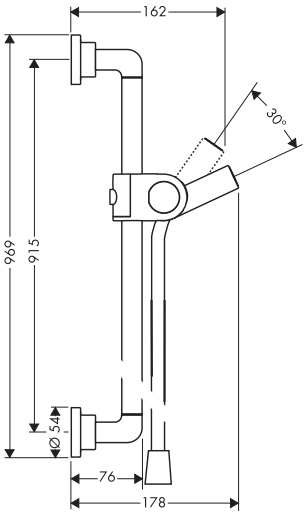

Length (m)	Shower hose length (mm)	Finish	Code no.
0,90	1600	Chrome	27831000
		Brushed Black Chrome	27831340
		AXOR FinishPlus*	27831XXX

*AXOR FinishPlus: For further AXOR FinishPlus surfaces please see the AXOR FinishPlus overview on page 44.

Possible product combinations

Showers

AXOR ShowerSolutions
Overhead shower 250/580 3jet

#35283XXX

page 432

AXOR ShowerSolutions
Overhead shower 300/300 2jet with ceiling connection

#35320XXX

page 431

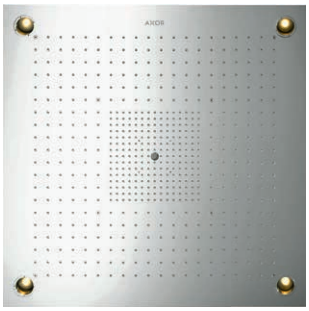

AXOR ShowerSolutions
ShowerHeaven 970/970 3jet with lighting

#10623XXX

page 415

Shower controls

AXOR ShowerSelect ID
Thermostat for concealed installation square for 2 functions

#36752XXX

page 519

AXOR ShowerComposition
Thermostatic module 540/110 for concealed installation for 3 functions

#12572XXX

page 400

AXOR ShowerSolutions
Thermostatic module Select 600/90 for concealed installation for 4 functions

#18357XXX

page 527

Further complementary products

AXOR Universal Rectangular
Bath towel rail 600 mm

#42661XXX

page 554

AXOR FlushPlate
Flush plate for Geberit Sigma

#42530XXX

page 581

AXOR Bidette Showers
Bidette hand shower 1jet softsquare for cold water with shower holder and shower hose 1.25 m

#29241XXX

page 463

Basin

Bidet

Bath

Shower

Thermostatic mixers / valves / diverters

Porter unit / shower sets

Complementary products

AXOR CITTERIO E

DESIGN

–

ANTONIO CITTERIO

"AXOR Citterio E is a redesign of an everyday object. These little, but refined details are extremly important for perception." ANTONIO CITTERIO

AXOR Citterio E

The essence of elegance

AXOR Citterio E perfects the beauty of proportionality and connects curved and angular shapes, familiar and new, classic and modern, to create a timelessly elegant form. Balanced right down to the last detail. This is the E in AXOR Citterio E. Harmony is created in the balance of opposites.

Design: Antonio Citterio

Characteristic design feature:

Elegant, timeless design: Soft, round shapes, a tapered spout and classic cross handles that are especially ergonomic.

The designer's idea:

A symbiosis of opposites to create perfect beauty: With AXOR Citterio E we wanted to create something simple, but with high tangible and visible quality, to serve as an antidote to our complex world.

Special collection highlights:

/ Three handle variants: the classic cross handle, the modern pin handle and the ergonomic lever handle

/ Modern functionality: pin handle, shower set with metal slider, thermostatic module with various handles for different functions and, unambiguous, ergonomic control

/ Selected products from the collection available in Matt Black

/ AXOR Citterio E is the third collection in cooperation with Antonio Citterio

→ Learn more about AXOR Citterio E: axor-design.com

A perfect symbiosis of right angles and soft, round shapes

Elegance and ease of use come together in the single-hole lavatory faucet. Precisely worked surfaces and edges are combined with gentle shapes and escutcheons in Softsquare design. Different handle variants, such as the slim joystick handle or the lever handle, are an expression of high quality.

Various handle variants

/ Distinctive, modern pin handle with joystick cartridge—for ergonomic operation

/ Lever handle for easy, ergonomic control

A tapered spout

Thoroughly planned design right down to the spout—for an elegant look

Harmonious character

Precisely developed surfaces and edges which, together with gentle curves, create a balanced look—even with very different handle variants

Fully integrated spray formers

Uncompromising execution down to the spray former that underscores the intricate mixer design. Flow rate: 5 l/min (at 3 bar)

Cross handles, with their classic look, characterize the three-hole wash basin mixers. Ergonomic, with soft radii, they are easy to grip and to operate.

Elegance and functionality in the shower

The scope for individual design is almost boundless. The thermostatic module 380/120 can be installed with individual escutcheons for three functions or with a plate for two functions. In connection with the basic set based on the modular principle of the AXOR ShowerCollection, installation can be carried out for customized dimensions in rows spaced 10 mm apart. The building block system and the optional 120/120 square product grid offer more options for individuality and creativity in shower planning.

A perfect symbiosis of right angles and soft, round shapes

Elegance and ease of use come together in the single-hole lavatory faucet. Precisely worked surfaces and edges are combined with gentle shapes and escutcheons in Softsquare design. Different handle variants, such as the slim joystick handle or the lever handle, are an expression of high quality.

The four-hole rim-mounted mixer is a timeless, elegant product for the bathtub. At the same time, the handles offer intuitive operation: the temperature with the cylindrical handle, the water flow with the ergonomic cross handle.

Single lever basin mixers for hand washbasins

Features of all variants

/ consists of: single lever basin mixer, waste set
/ ComfortZone: 90
/ projection: 135 mm
/ spout height: 90 mm
/ spray type: laminar spray
/ maximum flow rate at 3 bar: 5 l/min
/ ceramic cartridge
/ suitable for continuous flow water heaters
/ non-closing waste set
/ connection type: G ⅜ hose connections
/ connection dimension: DN15
/ EU taxonomy: max. 6 l/min – Substantial Contribution (SC) possible

pin handle

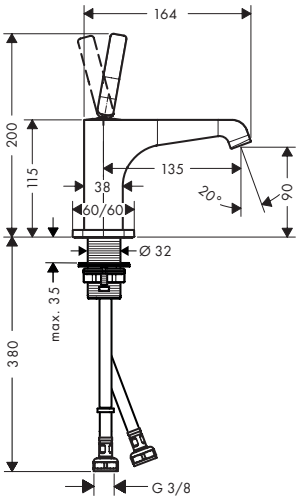

lever handle

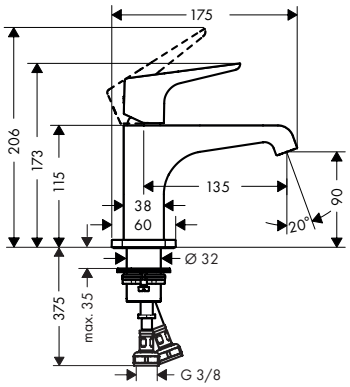

Special feature

EcoSmart

Technologies

Comfort Zone

Overview variants

ComfortZone	Projection (mm)	Spout height (mm)	Handle version	Finish	Code no.
90	135	90	pin	Chrome	36102000
				Brushed Bronze	36102140
				Brushed Black Chrome	36102340
				AXOR FinishPlus*	36102XXX
90	135	90	lever	Chrome	36112000
				Brushed Bronze	36112140
				Brushed Black Chrome	36112340
				AXOR FinishPlus*	36112XXX

Measurements within scale drawings are in mm.
Technical specifications and units of measure are subject to change.

Single lever basin mixers

Features of all variants

/ consists of: single lever basin mixer, waste set
/ spray type: laminar spray
/ maximum flow rate at 3 bar: 5 l/min
/ ceramic cartridge
/ suitable for continuous flow water heaters
/ connection type: G ⅜ hose connections
/ connection dimension: DN15
/ EU taxonomy: max. 6 l/min – Substantial Contribution (SC) possible

130

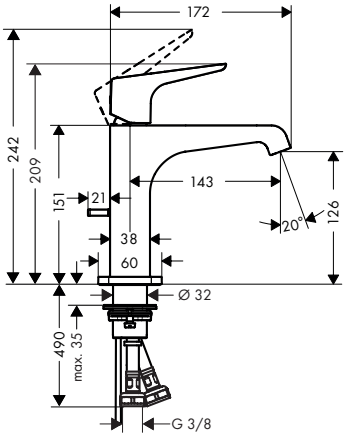

190

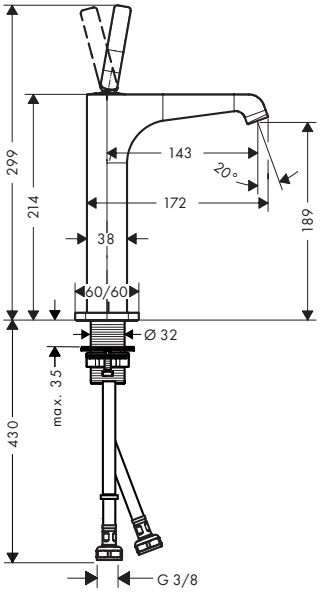

250

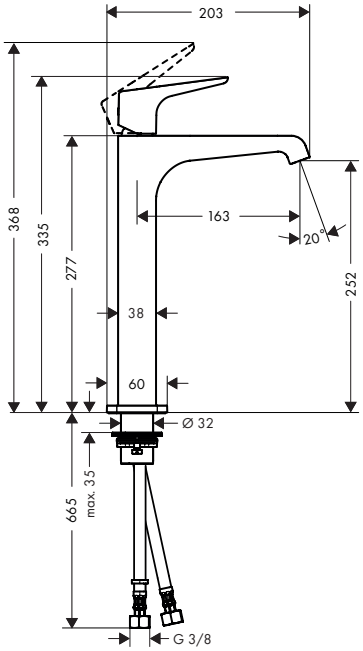

Special feature

EcoSmart

Technologies

Comfort Zone

Certificates/declarations

EPD

Overview variants

ComfortZone	Projection (mm)	Spout height (mm)	Waste set	Handle version	For wash bowls	Finish	Code no.
130	143	126	pop-up	pin	–	Chrome	36100000
						Brushed Bronze	36100140
						Brushed Black Chrome	36100340
						Matt Black	36100670
						AXOR FinishPlus*	36100XXX
130	143	126	non-closing	pin	–	Chrome	36101000
						Brushed Bronze	36101140
						Brushed Black Chrome	36101340
						Matt Black	36101670
						Stainless Steel Optic	36101800
						AXOR FinishPlus*	36101XXX

For more information about this product, please see the next page.

*AXOR FinishPlus: For further AXOR FinishPlus surfaces please see the AXOR FinishPlus overview on page 44.

Single lever basin mixers

Overview variants

ComfortZone	Projection (mm)	Spout height (mm)	Waste set	Handle version	For wash bowls	Finish	Code no.
130	143	126	pop-up	lever	–	Chrome	36110000
						Brushed Bronze	36110140
						Brushed Black Chrome	36110340
						Matt Black	36110670
						AXOR FinishPlus*	36110XXX
130	143	126	non-closing	lever	–	Chrome	36111000
						Brushed Bronze	36111140
						Brushed Black Chrome	36111340
						Matt Black	36111670
						AXOR FinishPlus*	36111XXX
190	143	189	non-closing	pin	■	Chrome	36103000
						Brushed Bronze	36103140
						Brushed Black Chrome	36103340
						AXOR FinishPlus*	36103XXX
250	163	252	non-closing	pin	■	Chrome	36104000
						Brushed Bronze	36104140
						Brushed Black Chrome	36104340
						Matt Black	36104670
						AXOR FinishPlus*	36104XXX
250	163	252	non-closing	lever	■	Chrome	36113000
						Brushed Bronze	36113140
						Brushed Black Chrome	36113340
						Matt Black	36113670
						AXOR FinishPlus*	36113XXX

Pillar tap 90 with pin handle without waste set

Features of all variants

/ ComfortZone: 90
/ projection: 135 mm
/ spout height: 90 mm
/ handle variant: pin handle
/ spray type: laminar spray
/ maximum flow rate at 3 bar: 5 l/min
/ ceramic cartridge
/ for cold water connection
/ non-closing waste set
/ connection type: G ⅜ hose connection
/ connection dimension: DN15
/ EU taxonomy: max. 6 l/min – Substantial Contribution (SC) possible

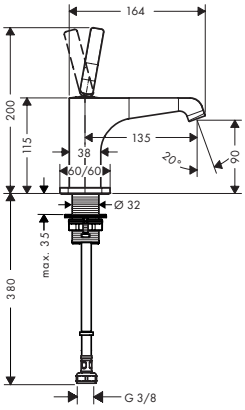

Special feature

EcoSmart

Technologies

Comfort Zone

ComfortZone	Projection (mm)	Spout height (mm)	CoolStart	Max. flow rate at 3 bar (l/min)	Finish	Code no.
90	135	90	–	5	Chrome	36105000
					Brushed Bronze	36105140
					Brushed Black Chrome	36105340
					AXOR FinishPlus*	36105XXX

Measurements within scale drawings are in mm.
Technical specifications and units of measure are subject to change.

Single lever basin mixers for concealed installation wall-mounted

Features of all variants

/ consists of: single lever basin mixer for concealed installation wall-mounted, waste set
/ projection: 221 mm
/ handle variant: pin handle
/ spray type: laminar spray
/ maximum flow rate at 3 bar: 5 l/min
/ ceramic cartridge
/ suitable for continuous flow water heaters
/ non-closing waste set
/ connection type: basic set
/ handle can be positioned on the right or left, depending on the basic set installation
/ EU taxonomy: max. 6 l/min – Substantial Contribution (SC) possible

with plate

with escutcheons

Special feature

EcoSmart

Certificates/declarations

EPD

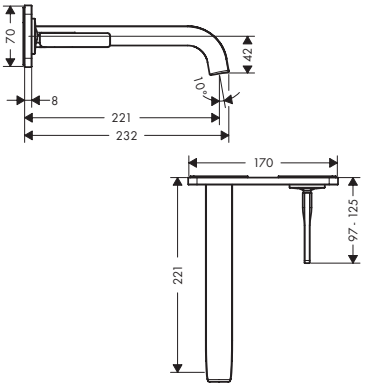

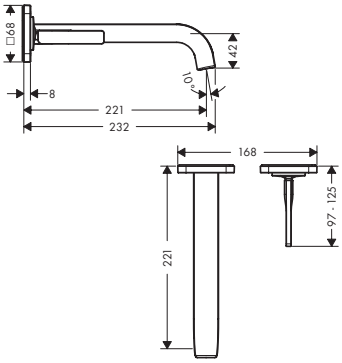

Overview variants

Projection (mm)	Cover	Finish	Code no.
221	plate	Chrome	36114000
		Brushed Bronze	36114140
		Brushed Black Chrome	36114340
		AXOR FinishPlus*	36114XXX
221	escutcheons	Chrome	36106000
		Brushed Bronze	36106140
		Brushed Black Chrome	36106340
		Matt Black	36106670
		AXOR FinishPlus*	36106XXX

Required parts:		Code no.
	Basic set for single lever basin mixer for concealed installation wall-mounted	13623180

Optional parts:		Code no.
	Extension set 25 mm for single lever basin mixer wall-mounted	13586000

*AXOR FinishPlus: For further AXOR FinishPlus surfaces please see the AXOR FinishPlus overview on page 44.

3-hole basin mixer 170 with plate and pop-up waste set

Features of all variants

/ consists of: 3-hole basin mixer, waste set
/ ComfortZone: 170
/ projection: 165 mm
/ spout height: 170 mm
/ handle variant: cross handle
/ spray type: laminar spray
/ maximum flow rate at 3 bar: 5 l/min
/ ceramic valves hot/ cold 180°
/ suitable for continuous flow water heaters
/ pop-up waste set G 1¼
/ connection type: G ⅜ hose connections
/ connection dimension: DN15
/ for use only at flat, plain surfaces
/ EU taxonomy: max. 6 l/min – Substantial Contribution (SC) possible

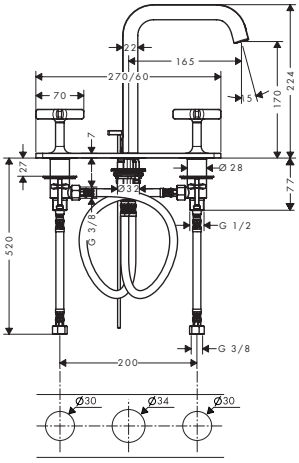

Special feature

EcoSmart

Technologies

Comfort Zone

ComfortZone	Projection (mm)	Spout height (mm)	Waste set	Finish	Code no.
170	165	170	pop-up	Chrome	36116000
				Brushed Bronze	36116140
				Brushed Black Chrome	36116340
				AXOR FinishPlus*	36116XXX

Optional parts:	Code no.
Hose extension set for 3-hole basin mixer	38959000

3-hole basin mixer 170 with escutcheons and pop-up waste set

Features of all variants

/ consists of: 3-hole basin mixer, waste set
/ ComfortZone: 170
/ projection: 165 mm
/ spout height: 170 mm
/ handle variant: cross handle
/ spray type: laminar spray
/ maximum flow rate at 3 bar: 5 l/min
/ ceramic valves hot/ cold 180°
/ suitable for continuous flow water heaters
/ pop-up waste set G 1¼
/ connection type: G ⅜ hose connections
/ connection dimension: DN15
/ EU taxonomy: max. 6 l/min – Substantial Contribution (SC) possible

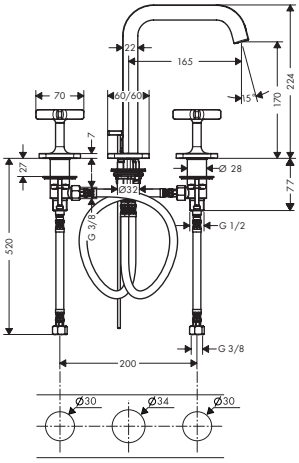

Special feature

EcoSmart

Technologies

Comfort Zone

ComfortZone	Projection (mm)	Spout height (mm)	Waste set	Finish	Code no.
170	165	170	pop-up	Chrome	36108000
				Brushed Bronze	36108140
				Brushed Black Chrome	36108340
				Matt Black	36108670
				AXOR FinishPlus*	36108XXX

Measurements within scale drawings are in mm.
Technical specifications and units of measure are subject to change.

3-hole basin mixer 170 with escutcheons and pop-up waste set

Optional parts:		Code no.
	Hose extension set for 3-hole basin mixer	38959000

3-hole basin mixers wall mounted

Features of all variants

/ consists of: 3-hole basin mixer for concealed installation wall-mounted, waste set
/ projection: 220 mm
/ handle variant: cross handle
/ spray type: laminar spray
/ maximum flow rate at 3 bar: 5 l/min
/ ceramic valves hot/ cold 180°
/ suitable for continuous flow water heaters
/ non-closing waste set
/ connection type: basic set
/ connection dimension: DN15
/ EU taxonomy: max. 6 l/min – Substantial Contribution (SC) possible

with plate

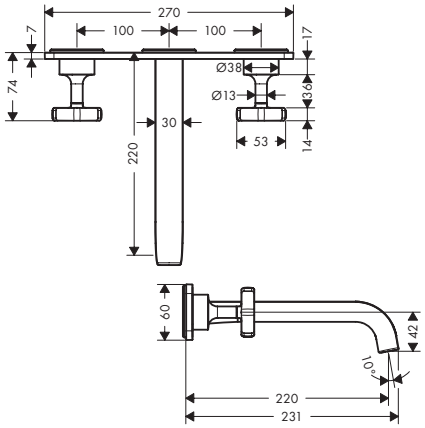

with escutcheons

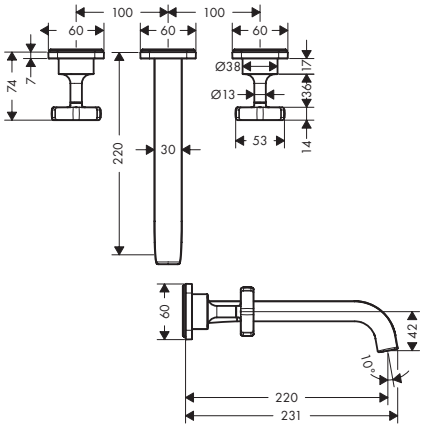

Special feature

EcoSmart

Overview variants

Projection (mm)	Cover	Finish	Code no.
220	plate	Chrome	36115000
		Brushed Bronze	36115140
		Brushed Black Chrome	36115340
		AXOR FinishPlus*	36115XXX
220	escutcheons	Chrome	36107000
		Brushed Bronze	36107140
		Brushed Black Chrome	36107340
		Matt Black	36107670
		AXOR FinishPlus*	36107XXX

Required parts:		Code no.
	Basic set for 3-hole basin mixer for concealed installation wall-mounted	10303180

Optional parts:		Code no.
	AXOR Starck Extension set 25 mm for basic set for 3-hole basin mixer wall-mounted	96259000
	Seal	96383000

*AXOR FinishPlus: For further AXOR FinishPlus surfaces please see the AXOR FinishPlus overview on page 44.

Single lever bidet mixers

Features of all variants

/ consists of: single lever bidet mixer, waste set
/ projection: 114 mm
/ aerator with ball pivot
/ spray type: normal spray
/ maximum flow rate at 3 bar: 7,2 l/min
/ ceramic cartridge
/ suitable for continous flow water heaters
/ pop-up waste set G 1¼
/ connection type: G ⅜ hose connections
/ connection dimension: DN15

pin handle

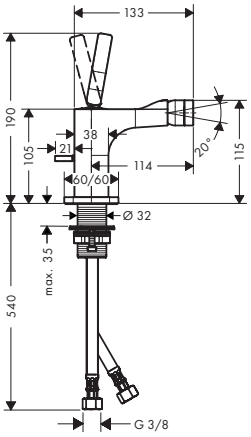

lever handle

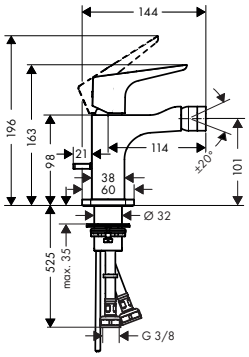

Technologies

Quick Clean
AirPower

Overview variants

Projection (mm)	Spout height (mm)	Handle version	Finish	Code no.
114	105	pin	Chrome	36120000
			Brushed Bronze	36120140
			Brushed Black Chrome	36120340
			Matt Black	36120670
			AXOR FinishPlus*	36120XXX
114	101	lever	Chrome	36121000
			Brushed Bronze	36121140
			Brushed Black Chrome	36121340
			AXOR FinishPlus*	36121XXX

Single lever basin mixer 130 with bidette hand shower and shower hose 1.60 m

Features of all variants

/ consists of: single lever basin mixer, bidette hand shower, shower holder, shower hose, waste set
/ ComfortZone: 130
/ projection: 143 mm
/ spout height: 126 mm
/ handle variant: pin handle
/ spray type: normal spray
/ spray type Bidette: shower spray
/ maximum flow rate at 3 bar: 5 l/min
/ ceramic cartridge
/ suitable for continuous flow water heaters
/ push-open waste set G 1¼
/ connection type: G ⅜ hose connections
/ connection dimension: DN15
/ EU taxonomy: max. 6 l/min – Substantial Contribution (SC) possible

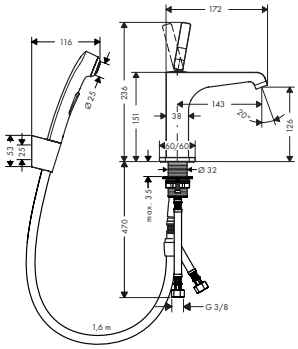

Special feature

EcoSmart

Technologies

Comfort Zone

Certificates/declarations

EPD

Projection (mm)	Spout height (mm)	Finish	Code no.
143	126	Chrome	36130000
		Brushed Bronze	36130140
		Brushed Black Chrome	36130340
		Matt Black	36130670
		AXOR FinishPlus*	36130XXX

Measurements within scale drawings are in mm.
Technical specifications and units of measure are subject to change.

Bath spout

Features of all variants

/ 1 function
/ connection type: G ¾
/ projection: 181 mm
/ maximum flow rate at 3 bar: 23 l/min
/ spray type: laminar spray

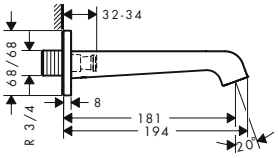

Projection (mm)	Finish	Code no.
181	Chrome	36425000
	Brushed Bronze	36425140
	Brushed Black Chrome	36425340
	Matt Black	36425670
	AXOR FinishPlus*	36425XXX

Bath thermostat floor-standing

Features of all variants

/ consists of: bath thermostat floor standing, baton hand shower, shower hose, shower holder
/ projection 190 mm
/ 2 functions
/ diversion between outlets via diverter knob
/ thermostat cartridge, ceramic valves 180°
/ spray type mixer: laminar spray
/ spray type hand shower: Rain, MonoRain
/ maximum flow rate at 3 bar: 19 l/min
/ flow rate for bath spout at 3 bar: 19 l/min
/ flow rate of hand shower at 3 bar: 15 l/min
/ min. operating pressure: 1 bar
/ max. operating pressure: 10 bar
/ Safety stop at 40 °C
/ temperature limitation adjustable
/ non-return valve
/ with automatic resetting
/ connection dimension: DN15
/ connection type: basic set
/ deck mounted

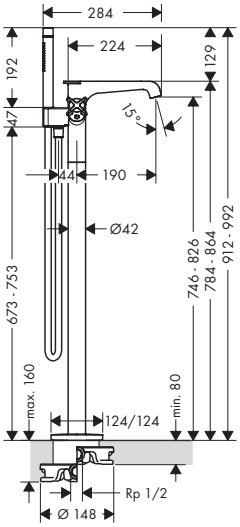

Special feature

Technologies

Spray types

Projection (mm)	Finish	Code no.
190	Chrome	36416000
	Brushed Bronze	36416140
	Brushed Black Chrome	36416340
	Matt Black	36416670
	AXOR FinishPlus*	36416XXX

For more information about this product, please see the next page.

*AXOR FinishPlus: For further AXOR FinishPlus surfaces please see the AXOR FinishPlus overview on page 44.

Bath thermostat floor-standing

Required parts:		Code no.
	Basic set for mixers floor-standing	10452180

Optional parts:		Code no.
	Sealing foil for basic set bath mixer floor-standing	96441000
	Extension 60 mm	92135000

Single lever bath mixers for concealed installation

Features of all variants

/ 2 functions
/ ceramic cartridge
/ temperature limitation adjustable
/ diverter with automatic resetting
/ with silencer
/ suitable for continous flow water heaters
/ connection type: basic set
/ wall-mounted
/ min. operating pressure: 1 bar
/ max. operating pressure: 10 bar

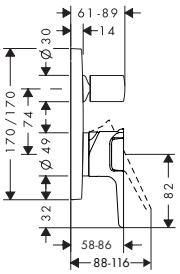

Overview variants

Security combination EN 1717	Max. flow rate at 3 bar (l/min)	Finish	Code no.
–	29	Chrome	36455000
		Brushed Bronze	36455140
		Brushed Black Chrome	36455340
		Matt Black	36455670
		AXOR FinishPlus*	36455XXX
■	25	Chrome	36457000
		Brushed Bronze	36457140
		Brushed Black Chrome	36457340
		AXOR FinishPlus*	36457XXX

Required parts (choose one):			Code no.
Option 1		AXOR iBox universal 2 Basic set	01400180
+		Adapter plate for iBox universal 2	13588000
Option 2		AXOR iBox universal Basic set	01700180

Measurements within scale drawings are in mm.
Technical specifications and units of measure are subject to change.

2-hole rim mounted thermostatic bath mixer

Features of all variants

/ 2 functions
/ Safety stop at 40 °C
/ temperature limitation adjustable
/ suitable for remote spout
/ connection dimension: DN15
/ connection type: basic set
/ rim mounted

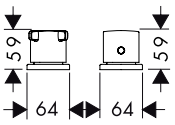

Special feature

Water Flow Control

Technologies

Thermostat

Safety Stop 40 °C

Number of functions	Finish	Code no.
2 functions	Chrome	36412000
	Brushed Bronze	36412140
	Brushed Black Chrome	36412340
	AXOR FinishPlus*	36412XXX

Required parts:		Code no.
	Basic set for 2-hole rim mounted thermostatic bath mixer	15486180

Optional parts:		Code no.
	Connection tube set for 2-hole rim mounted thermostatic bath mixer	13089000
	Flexible connection tube 800 mm	58308000

Rim mounted bath set with hand shower

Features

/ consists of: hand shower, shower holder, shower hose, Secubox, Secuflex hose brake, hose insert
/ suitable for for installation on bath rim or tile surround (no mounting plate available)
/ connection dimension: DN15
/ drilling diameter on bath tub: Ø 50 mm
/ maximum pull-out length of hand shower: 1.10 m

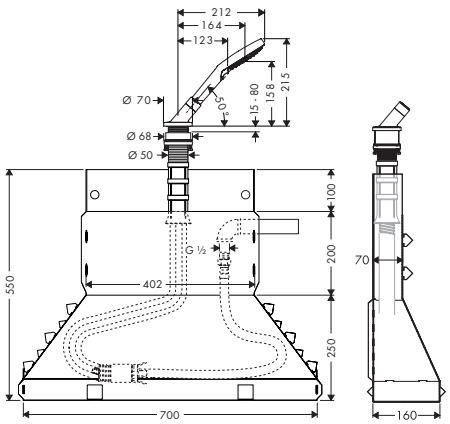

Finish	Code no.
Chrome	19418000
Brushed Bronze	19418140
Brushed Black Chrome	19418340
Polished Gold Optic	19418990
AXOR FinishPlus*	19418XXX

Optional parts:		Code no.
	Secuflex insert extension	98806000

*AXOR FinishPlus: For further AXOR FinishPlus surfaces please see the AXOR FinishPlus overview on page 44.

4-hole rim mounted thermostatic bath mixer

Features of all variants

/ consists of: 4-hole rim mounted bath mixer, hand shower, Secuflex hose set
/ projection 190 mm
/ 2 functions
/ diversion between outlets via diverter knob
/ spray type mixer: laminar spray
/ spray type hand shower: Rain, RainAir, WhirlAir
/ maximum pull-out length of hand shower: 1.10 m
/ maximum flow rate at 3 bar: 20 l/min
/ flow rate for bath spout at 3 bar: 20 l/min
/ flow rate of hand shower at 3 bar: 14 l/min
/ min. operating pressure: 1 bar
/ max. operating pressure: 10 bar
/ Safety stop at 40 °C
/ temperature limitation adjustable
/ non-return valve
/ with automatic resetting
/ with silencer
/ connection dimension: DN15
/ connection type: basic set
/ rim mounted

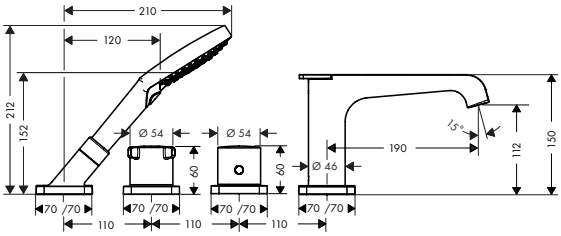

Special feature

Technologies

Spray types

Max. flow rate at 3 bar (l/min)	Finish	Code no.
20	Chrome	36411000
	Brushed Bronze	36411140
	Brushed Black Chrome	36411340
	Matt Black	36411670
	AXOR FinishPlus*	36411XXX

Required parts:	Code no.
Basic set for 4-hole rim mounted thermostatic bath mixer	15482180

4-hole tile mounted thermostatic bath mixer

Features of all variants

/ consists of: 4-hole tile mounted bath mixer, hand shower, Secuflex hose set
/ projection 190 mm
/ 2 functions
/ diversion between outlets via diverter knob
/ spray type mixer: laminar spray
/ spray type hand shower: Rain, RainAir, WhirlAir
/ maximum pull-out length of hand shower: 1.10 m
/ maximum flow rate at 3 bar: 20 l/min
/ flow rate for bath spout at 3 bar: 20 l/min
/ flow rate of hand shower at 3 bar: 14 l/min
/ min. operating pressure: 1 bar
/ max. operating pressure: 10 bar
/ Safety stop at 40 °C
/ temperature limitation adjustable
/ non-return valve
/ with automatic resetting
/ with silencer
/ connection dimension: DN15
/ connection type: basic set
/ tile mounted

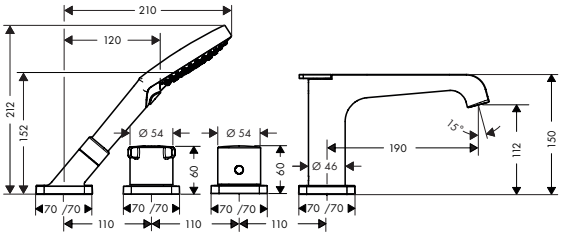

Special feature

Technologies

Spray types

Max. flow rate at 3 bar (l/min)	Finish	Code no.
20	Chrome	36410000
	Brushed Bronze	36410140
	Brushed Black Chrome	36410340
	Matt Black	36410670
	AXOR FinishPlus*	36410XXX

Required parts:	Code no.
Basic set for 4-hole tile mounted thermostatic bath mixer	15483180

Measurements within scale drawings are in mm.
Technical specifications and units of measure are subject to change.

Single lever shower mixer for concealed installation

Features

/ 1 function
/ maximum flow rate at 3 bar: 29 l/min
/ ceramic cartridge
/ temperature limitation adjustable
/ with silencer
/ suitable for continous flow water heaters
/ min. operating pressure: 1 bar
/ max. operating pressure: 10 bar
/ connection type: basic set

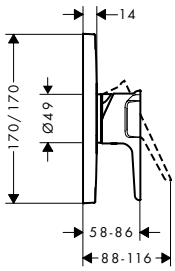

Finish	Code no.
Chrome	36655000
Brushed Bronze	36655140
Brushed Black Chrome	36655340
Matt Black	36655670
AXOR FinishPlus*	36655XXX

Required parts (choose one):			Code no.
Option 1		AXOR iBox universal 2 Basic set	01400180
+		Adapter plate for iBox universal 2	13588000
Option 2		AXOR iBox universal Basic set	01700180

Bath thermostat for exposed installation

Features of all variants

/ projection 177 mm
/ 2 functions
/ thermostat cartridge, shut-off/ diverter valve
/ spray type spout: normal spray
/ maximum flow rate at 3 bar: 21 l/min
/ flow rate for bath spout at 3 bar: 21 l/min
/ flow rate of hand shower at 3 bar: 17 l/min
/ min. operating pressure: 1 bar
/ max. operating pressure: 10 bar
/ Safety stop at 40 °C
/ temperature limitation adjustable
/ non-return valve
/ with silencer
/ connection dimension: DN15
/ connection type: S-connections
/ centre distance: 150 ± 16 mm

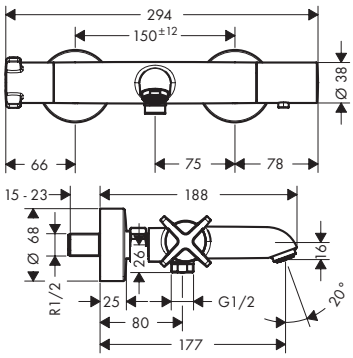

Special feature

Technologies

Max. flow rate at 3 bar (l/min)	Finish	Code no.
21	Chrome	36140000
	Brushed Bronze	36140140
	Brushed Black Chrome	36140340
	AXOR FinishPlus*	36140XXX

*AXOR FinishPlus: For further AXOR FinishPlus surfaces please see the AXOR FinishPlus overview on page 44.

Thermostatic module 380/120 for concealed installation for 2 functions with plate

Features of all variants

/ 2 functions
/ simultaneous utilization of 2 functions
/ thermostat cartridge
/ flow rate upper outlet: 42 l/min
/ flow rate lower outlet: 40 l/min
/ maximum flow rate at 3 bar: 42 l/min
/ min. operating pressure: 1 bar
/ max. operating pressure: 10 bar
/ combination of highflow thermostat with shut-off valve and Duo diverter valve for controlling 2 consumers
/ Safety stop at 40 °C
/ temperature limitation adjustable
/ connection dimension: DN20
/ connection type: basic set

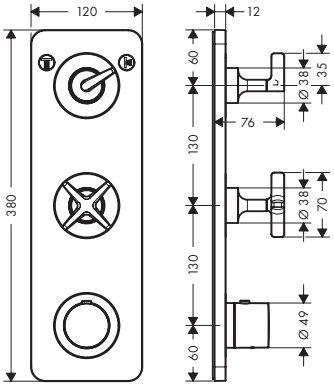

Special feature

Water Flow Control

Technologies

Thermostat, Safety Stop

Certificates/declarations

EPD

Number of functions	Max. flow rate at 3 bar (l/min)	Finish	Code no.
2 functions	42	Chrome	36703000
		Brushed Bronze	36703140
		Brushed Black Chrome	36703340
		Matt Black	36703670
		AXOR FinishPlus*	36703XXX

Required parts:	Code no.
AXOR Citterio E Basic set for thermostatic module 380/120 for concealed installation for 2 functions	36701180

Measurements within scale drawings are in mm.
Technical specifications and units of measure are subject to change.

Thermostatic module 380/120 for concealed installation for 3 functions with escutcheons

Features of all variants

/ consists of: shower thermostat, shut-off valve, diverter valve
/ simultaneous utilization of 2 functions
/ thermostat cartridge
/ maximum flow rate at 1 bar: 19 l/min
/ flow rate lower outlet: 37,9 l/min
/ flow rate left and right: 37,9 l/min
/ maximum flow rate at 3 bar: 42 l/min
/ min. operating pressure: 1 bar
/ max. operating pressure: 10 bar
/ combination of highflow thermostat with shut-off valve and Quattro diverter valve for controlling 3 consumers
/ Safety stop at 40 °C
/ temperature limitation adjustable
/ connection dimension: DN20
/ connection type: basic set

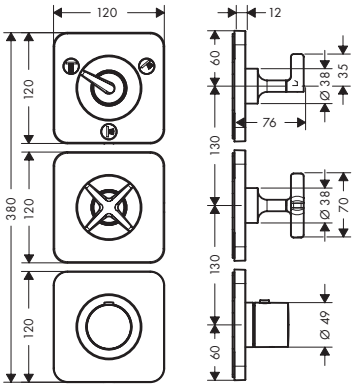

Special feature

Water Flow Control

Technologies

Thermostat | Safety Stop 40°C

Certificates/declarations

EPD

Number of functions	Max. flow rate at 3 bar (l/min)	Finish	Code no.
3 functions	42	Chrome	36704000
		Brushed Bronze	36704140
		Brushed Black Chrome	36704340
		Matt Black	36704670
		AXOR FinishPlus*	36704XXX

Required parts:	Code no.
AXOR Citterio E Basic set for thermostatic module 380/120 for concealed installation for 3 functions	36708180

Thermostat 120/120 for concealed installation

Features of all variants

/ thermostat cartridge
/ maximum flow rate at 3 bar: 59 l/min
/ min. operating pressure: 1,5 bar
/ max. operating pressure: 10 bar
/ Safety stop at 40 °C
/ temperature limitation adjustable
/ connection dimension: DN20
/ connection type: basic set

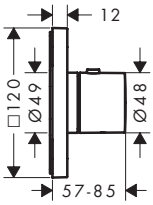

Technologies

Thermostat | Safety Stop 40°C

Product dimensions (mm)	Finish	Code no.
120/120	Chrome	36702000
	Brushed Bronze	36702140
	Brushed Black Chrome	36702340
	Matt Black	36702670
	AXOR FinishPlus*	36702XXX

For more information about this product, please see the next page.

*AXOR FinishPlus: For further AXOR FinishPlus surfaces please see the AXOR FinishPlus overview on page 44.

Thermostat 120/120 for concealed installation

Required parts:	Code no.
AXOR ShowerSolutions Basic set for thermostatic module 120/120 for concealed installation	10754180

Optional parts:	Finish	Code no.
AXOR ShowerSolutions Extension set 25 mm for thermostatic module	Chrome	10790000
	AXOR FinishPlus*	10790XXX

Shut-off valve 120/120 for concealed installation

Features of all variants

/ connection type: basic set
/ in a freely arranged installation, basic sets no.16973180, no.16974180 or no.16970180 can also be used
/ in a joined installation (10 mm distance) with no.36703000 or no.36704000, the basic set no.10971180 must be used
/ in a joined installation (10 mm distance) with no.36702000 and no.36772000, the thermostat module finish set for 3 consumers with 3 escutcheons 12x12 no.36704000 and the basic set no.36708180 must be used
/ noise class: II

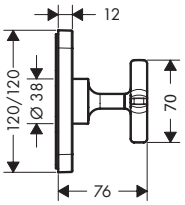

Product dimensions (mm)	Finish	Code no.
120/120	Chrome	36771000
	Brushed Bronze	36771140
	Brushed Black Chrome	36771340
	Matt Black	36771670
	AXOR FinishPlus*	36771XXX

Required parts (choose one):	Code no.
Basic set 130 l/min for shut-off valve for concealed installation spindle	16970180
Basic set 40 l/min for shut-off valve for concealed installation ceramic	16974180
AXOR ShowerSolutions Basic set for shut-off valve 120/120 for concealed installation	10971180
Basic set 52 l/min for shut-off valve for concealed installation spindle	16973180

Optional parts:	Code no.
Extension set 25 mm for shut-off/ diverter valve Trio-/ Quattro	92990000

Measurements within scale drawings are in mm.
Technical specifications and units of measure are subject to change.

Shut-off/ diverter valve Trio/ Quattro 120/120 for concealed installation

Features of all variants

/ 3 consumers: in a joined installation (10 mm distance) with no.36702000 and no.36771000, please use the thermostat module finish set for 3 consumers with 3 escutcheons 12x12 no.36704000 and the basic set no.36708180
/ 3 consumers: in a freely-arranged installation (distance greater than 10 mm), the basic set no.16930180 must be used
/ 2 consumers: in a joined installation (10 mm distance) with no.36702000, the basic set no.36770180 must be used
/ 2 consumers: in a freely-arranged installation (distance greater than 10 mm), the basic set no.16982180 must be used
/ 3 functions
/ simultaneous utilization of 2 functions
/ connection dimension: DN15

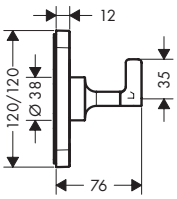

Product dimensions (mm)	Finish	Code no.
120/120	Chrome	36772000
	Brushed Bronze	36772140
	Brushed Black Chrome	36772340
	Matt Black	36772670
	AXOR FinishPlus*	36772XXX

Required parts (choose one):		Code no.
	AXOR Citterio E Basic set for shut-off/ diverter valve Trio 120/120 for concealed installation	36770180
	Basic set for shut-off/ diverter valve Trio for concealed installation	16982180
	Basic set for Quattro four-way diverter valve for concealed installation	16930180

Optional parts:		Code no.
	Extension set 25 mm for shut-off/ diverter valve Trio-/ Quattro	92990000

Thermostat for concealed installation with shut-off valve

Features of all variants

/ 1 function
/ thermostat cartridge, ceramic valves 90°
/ flow rate upper outlet: 25 l/min
/ flow rate lower outlet: 25 l/min
/ maximum flow rate at 3 bar: 25 l/min
/ min. operating pressure: 1 bar
/ max. operating pressure: 10 bar
/ Safety stop at 40 °C
/ temperature limitation adjustable
/ with silencer
/ connection type: basic set

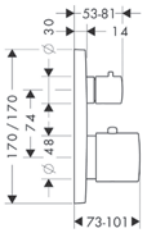

Special feature

Water Flow Control

Technologies

Thermostat °C

Safety Stop 40°C

Certificates/declarations

EPD

Max. flow rate at 3 bar (l/min)	Finish	Code no.
25	Chrome	34705000
	AXOR FinishPlus*	34705XXX

For more information about this product, please see the next page.

*AXOR FinishPlus: For further AXOR FinishPlus surfaces please see the AXOR FinishPlus overview on page 44.

Thermostat for concealed installation with shut-off valve

Required parts (choose one):			Code no.
Option 1		AXOR iBox universal 2 Basic set	01400180
+		Adapter plate for iBox universal 2	13588000
Option 2		AXOR iBox universal Basic set	01700180

Thermostat for concealed installation with shut-off/ diverter valve

Features of all variants

/ 2 functions
/ thermostat cartridge, shut-off valve
/ flow rate upper outlet: 25 l/min
/ flow rate lower outlet: 29 l/min
/ maximum flow rate at 3 bar: 29 l/min
/ min. operating pressure: 1 bar
/ max. operating pressure: 10 bar
/ Safety stop at 40 °C
/ temperature limitation adjustable
/ with silencer
/ connection type: basic set

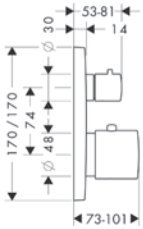

Special feature

Technologies

Certificates/declarations

Max. flow rate at 3 bar (l/min)	Finish	Code no.
29	Chrome	34725000
	AXOR FinishPlus*	34725XXX

Required parts (choose one):			Code no.
Option 1		AXOR iBox universal 2 Basic set	01400180
+		Adapter plate for iBox universal 2	13588000
Option 2		AXOR iBox universal Basic set	01700180

Measurements within scale drawings are in mm.
Technical specifications and units of measure are subject to change.

Shower modules for concealed installation

Features of all variants

/ shower head size: 120 mm
/ spray type: Rain
/ spray angle adjustable in five steps
/ functions as overhead, shoulder or side shower
/ maximum flow rate at 3 bar: 5,3 l/min
/ minimum flow pressure: 1 bar
/ connection thread: G ½
/ in a joined installation (10 mm distance), the basic set no.28486180 must be used
/ in a freely arranged installation, connection via a G ½ connecting thread is possible
/ if installed as an overhead shower with several joint modules, the use of installation aid no.28470180 is recommended
/ suitable for continous flow water heaters
/ connection dimension: DN15
/ material: metal
/ EU taxonomy: max. 6 l/min – Substantial Contribution (SC) possible
/ flow rate Rain spray at 3 bar: 5,3 l/min

softsquare

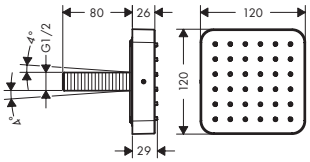

Special feature

Eco Smart+

Technologies

Quick Clean

Spray types

Rain

Overview variants

Shower head size	Number of sprays	Spray types	Function from (l/min)	Max. flow rate at 3 bar (l/min)	Min. flow pressure (bar)	Shape	Finish	Code no.
120/120	1	Rain	3.9	5.3	1	softsquare	Chrome	36822000
							Brushed Bronze	36822140
							Brushed Black Chrome	36822340
							AXOR FinishPlus*	36822XXX

Optional parts:		Code no.
	AXOR ShowerSolutions Basic set for shower module 120/120 for concealed installation	28486180
	AXOR ShowerSolutions Installation part	28470180

Porter unit 120/120 softsquare

Features of all variants

/ for shower hoses with a conical nut
/ integrated support function
/ metal connection angle
/ connection type: G ½
/ in a joined installation (10 mm distance) we recommend for perfect handling only the horizontal installation
/ in a joined installation (10 mm distance), the basic set no.28486180 must be used
/ in a freely-arranged installation (distance greater than 10 mm), no basic set is required

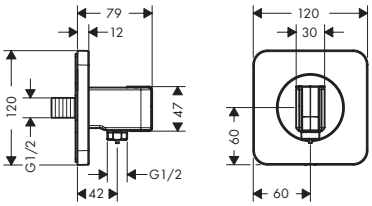

For more information about this product, please see the next page.

*AXOR FinishPlus: For further AXOR FinishPlus surfaces please see the AXOR FinishPlus overview on page 44.

Porter unit 120/120 softsquare

Shape	Finish	Code no.
softsquare	Chrome	36724000
	Brushed Bronze	36724140
	Brushed Black Chrome	36724340
	Matt Black	36724670
	Polished Gold Optic	36724990
	AXOR FinishPlus*	36724XXX

Optional parts:	Code no.
AXOR ShowerSolutions Basic set for shower module 120/120 for concealed installation	28486180

Shower set 0.90 m with hand shower 120 3jet

Features of all variants

/ consists of: hand shower, shower bar, shower hose, slider
/ shower head size: 120 mm
/ spray type: Rain, RainAir, WhirlAir
/ convenient spray selection via Select button
/ QuickClean: Limescale deposits can simply be rubbed off with your finger
/ maximum flow rate at 3 bar: 13,4 l/min
/ minimum flow pressure: 1,4 bar
/ operating pressure: min. 1 bar/max. 6 bar
/ wall supports of metal
/ bar width: 30 mm
/ drilling distance: 915 mm
/ pivot connector prevents hose from tangling

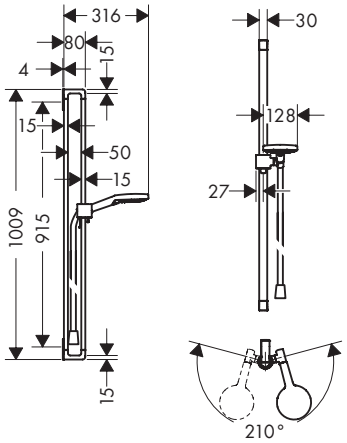

Technologies

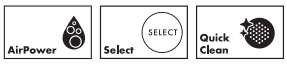

Spray types

Drilling distance (mm)	Shower head size	Spray types	Function from (l/min)	Max. flow rate at 3 bar (l/min)	Min. flow pressure (bar)	Finish	Code no.
915	120	Rain, RainAir, WhirlAir	7.6	13.4	1.4	Chrome	36735000
						Brushed Bronze	36735140
						Brushed Black Chrome	36735340
						Polished Gold Optic	36735990
						AXOR FinishPlus*	36735XXX

Measurements within scale drawings are in mm.
Technical specifications and units of measure are subject to change.

Shower set 0.90 m with hand shower 120 3jet

Optional parts:		Finish	Code no.
	AXOR Universal Softsquare Cover for rail	Chrome	42871000
		Brushed Bronze	42871140
		Brushed Black Chrome	42871340
		Polished Gold Optic	42871990
		AXOR FinishPlus*	42871XXX

Shower bar 0.90 m with shower hose 1.60 m

Features of all variants

/ consists of: shower bar, shower hose, slider
/ pivot connector prevents hose from tangling
/ slider moves sideways,up/down and pivots
/ bar width: 30 mm
/ profile pipe: square
/ drilling distance: 915 mm
/ shower hose length: 1600 mm
/ support for shower hose with conical nuts
/ slider steplessly adjustable
/ silent inclination angle adjustment
/ wall supports of metal
/ metal hand shower holder

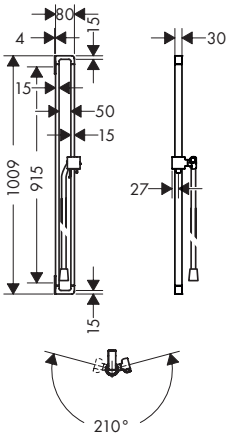

Length (m)	Shower hose length (mm)	Finish	Code no.
0,90	1600	Chrome	36736000
		Brushed Bronze	36736140
		Brushed Black Chrome	36736340
		Polished Gold Optic	36736990
		AXOR FinishPlus*	36736XXX

Optional parts:		Finish	Code no.
	AXOR Universal Softsquare Cover for rail	Chrome	42871000
		Brushed Bronze	42871140
		Brushed Black Chrome	42871340
		Polished Gold Optic	42871990
		AXOR FinishPlus*	42871XXX

*AXOR FinishPlus: For further AXOR FinishPlus surfaces please see the AXOR FinishPlus overview on page 44.

Possible product combinations

Showers

AXOR ShowerSolutions
Overhead shower 460/300 3jet with shower arm and softsquare escutcheon

#35276XXX

page 433

AXOR Citterio C
Overhead shower 270/270 1jet EcoSmart with shower arm

#28791XXX

page 95

AXOR ShowerSphere
Overhead shower 370/220 2jet EcoSmart with adjustable shower arm

#39746XXX

page 417

Shower controls

AXOR ShowerSelect ID
Thermostat for concealed installation softsquare for 2 functions

#36754XXX

page 88

AXOR One
Thermostatic module for concealed installation for 2 functions

#45712XXX

page 123

Further complementary products

AXOR Universal Softsquare
Rail bath towel holder 600 mm

#42832XXX

page 569

AXOR Suite Basins & Bathtub
Wash bowl 400 without tap hole and overflow

#42001XXX

page 602

AXOR Drain
Finish set shower drain 700

#42520XXX

page 632

Basin

Wash bowls and wash basins

Bidet

Bath

Shower

Thermostatic mixers / valves /diverters

Complementary products

AXOR URQUIOLA

DESIGN

–

PATRICIA URQUIOLA

AXOR

"Little memories and personal objects are what make a room feel like home. The mixer has to be personal, just as with AXOR Urquiola." PATRICIA URQUIOLA

AXOR Urquiola

Poetry for the senses

AXOR Urquiola is a many-faceted collection that embodies eclectic design principles. A skillful mix of styles and influences, a fascinating interplay of references and symbols, a harmonious whole created from distinct elements and interesting details. A variety of forms—asymmetrical and flat—come together to form something new and unique. Simultaneously sensuous and functional. An expression of the great art of style fusion.

Design: Patricia Urquiola

Characteristic design feature:

Skillful style fusion: With its asymmetries and flat surfaces, intricate details, radii and the skillful interplay of various forms, the collection expresses the unexpected. This is eclecticism. Yet the collection, while surprising, is harmonious and sensuous in its overall look.

The designer's idea:

Elements and impressions of life come together naturally—everything in harmony.

Special collection highlights:

/ Eclecticism: a fusion of various style elements that invokes the unconventional

/ AXOR Urquiola is characterized by expansive surfaces, extraordinary details and a sensual look

/ This elegant design features handles with large openings for a delicate overall impression, despite the amplitude of the basic form

/ AXOR Urquiola is the realization of Patricia Urquiola's vision of the bathroom, which was conceptualized as part of the AXOR WaterDreams

→ Learn more about AXOR Urquiola: axor-design.com

A fusion of styles and elements

The shifting interplay of personal memories and impressions forms the basis of the AXOR Urquiola collection. Abandoning conformity, convention and rigid structures. Embracing multifaceted, richly detailed worlds of style full of sensuality and powerful energy. With its lively style mixture, AXOR Urquiola offers a new freedom to create individually designed oases in which the details fuse together into a harmonious whole.

An exciting design detail

The surface of the mixer spout is interrupted by a perfectly crafted wave. This unusual design feature– a reference to a bamboo shoot– underscores the organic design

Water consumption

Flow rate for all wash basin mixers: 5 l/min (at 3 bar)

Elegant handle design

Despite their ample form, the handles appear light and delicate

Soft Expansive

AXOR Urquiola is characterized by its combination of expansive, perfectly crafted surfaces with soft, but precise, radii

The noble, luxurious surfaces, the soft shapes and flowing transitions accentuate the collection's air of harmony and variety.

The generously sized openings in the handles, an overall design feature, enable intuitive, ergonomic operation.

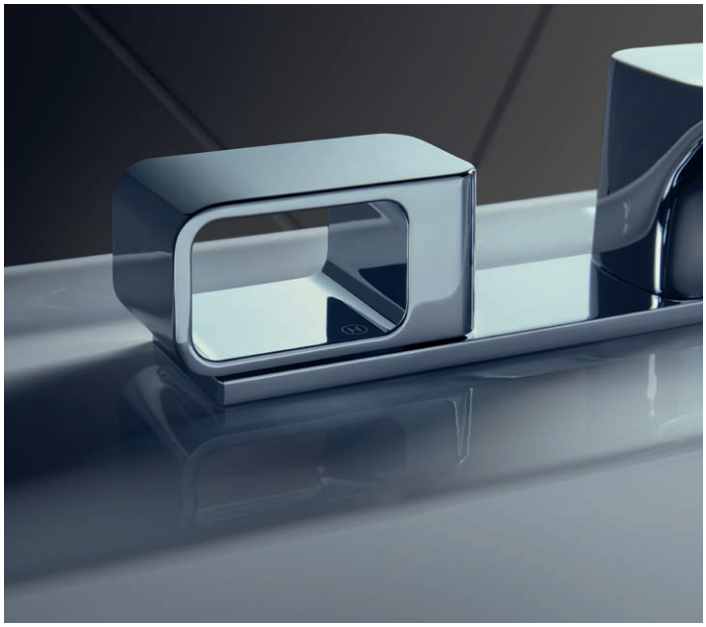

The fusion of different elements, shapes and functions creates a harmonious overall impression.

Distinctive design offers variety in the bathroom: The collection harmoniously blends into the most diverse of living spaces.

Style fusion all the way to the bathtub

The floor-standing bathtub mixer, with its eclectic design, is at home anywhere in the bathroom. Just as sensuous as its counterpart on the wash basin, it fuses flat surfaces with unexpected asymmetries. Masterfully combining innovative functionality with visionary design it becomes a visual highlight in the bathroom.

Water consumption

/ Flow rate: 20 l/min (at 3 bar) to fill the bathtub very quickly

Thermostatic mixer

/ For controlling the temperature. Safety lock at 38 °C for scalding prevention, can be set individually

Baton hand shower 2jet (# 28532000)

/ Included in scope of delivery

/ Rain and Mono spray modes

Shut-off and diverter valve

/ For opening the mixer and to switch between bathtub spout and hand shower

Shower hose 1.25 m (# 28622000)

/ Included in scope of delivery

Single lever basin mixer 110 for hand wash basins with pop-up waste set

Features of all variants

/ consists of: single lever basin mixer, waste set
/ ComfortZone: 110
/ projection: 114 mm
/ spout height: 105 mm
/ handle variant: flat handle
/ spray type: normal spray
/ maximum flow rate at 3 bar: 5 l/min
/ ceramic cartridge
/ temperature limitation adjustable
/ suitable for continuous flow water heaters
/ pop-up waste set G 1¼
/ connection type: G ⅜ hose connections
/ connection dimension: DN15
/ EU taxonomy: max. 6 l/min – Substantial Contribution (SC) possible

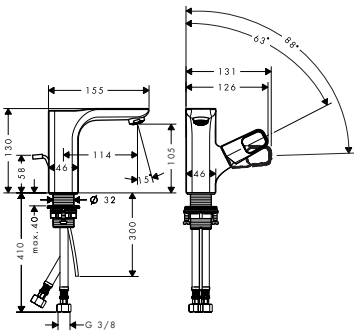

Special feature

EcoSmart

Technologies

Quick Clean | AirPower | Comfort Zone

ComfortZone	Projection (mm)	Spout height (mm)	Waste set	Finish	Code no.
110	114	105	pop-up	Chrome	11025000
				AXOR FinishPlus*	11025XXX

This product is not available in the AXOR FinishPlus surfaces Polished and Brushed Black Chrome.

Single lever basin mixers

Features of all variants

/ consists of: single lever basin mixer, waste set
/ handle variant: flat handle
/ spray type: normal spray
/ maximum flow rate at 3 bar: 5 l/min
/ ceramic cartridge
/ temperature limitation adjustable
/ suitable for continuous flow water heaters
/ connection type: G ⅜ hose connections
/ connection dimension: DN15
/ EU taxonomy: max. 6 l/min – Substantial Contribution (SC) possible

130

280

Special feature

EcoSmart

Technologies

Quick Clean | AirPower | Comfort Zone

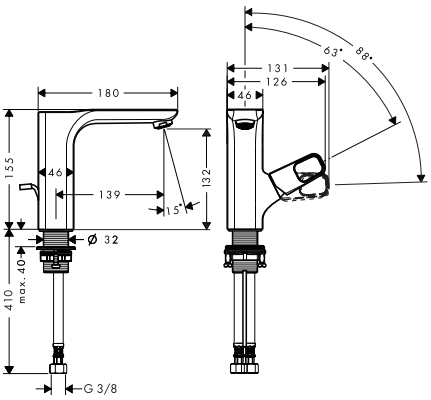

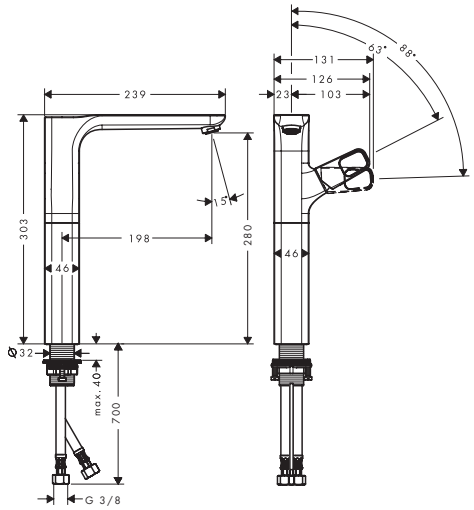

Overview variants

ComfortZone	Projection (mm)	Spout height (mm)	Waste set	For wash bowls	Finish	Code no.
130	139	132	pop-up	–	Chrome	11020000
					AXOR FinishPlus*	11020XXX
130	139	132	non-closing	–	Chrome	11021000
					AXOR FinishPlus*	11021XXX

Measurements within scale drawings are in mm.
Technical specifications and units of measure are subject to change.

Single lever basin mixers

Overview variants

ComfortZone	Projection (mm)	Spout height (mm)	Waste set	For wash bowls	Finish	Code no.
280	198	280	non-closing	■	Chrome	11035000
					AXOR FinishPlus*	11035XXX

This product is not available in the AXOR FinishPlus surfaces Polished and Brushed Black Chrome.

2-handle basin mixer 120 with pop-up waste set

Features of all variants

/ consists of: 2-handle basin mixer, waste set
/ ComfortZone: 120
/ projection: 139 mm
/ spout height: 120 mm
/ handle variant: flat handle
/ spray type: normal spray
/ maximum flow rate at 3 bar: 5 l/min
/ ceramic valves hot/cold 90°
/ suitable for continuous flow water heaters
/ pop-up waste set G 1¼
/ connection type: G ⅜ hose connections
/ connection dimension: DN15
/ EU taxonomy: max. 6 l/min – Substantial Contribution (SC) possible

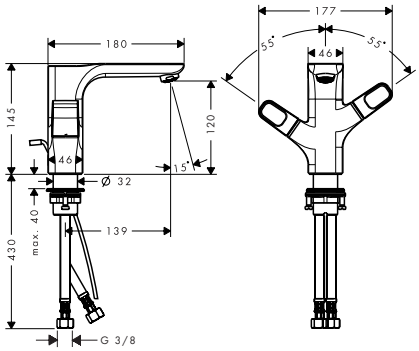

Special feature

Technologies

ComfortZone	Projection (mm)	Spout height (mm)	Waste set	Finish	Code no.
120	139	120	pop-up	Chrome	11024000
				AXOR FinishPlus*	11024XXX

This product is not available in the AXOR FinishPlus surfaces Polished and Brushed Black Chrome.

Single lever basin mixer for concealed installation wall-mounted with spout 200 mm

Features of all variants

/ consists of: single lever basin mixer for concealed installation wall-mounted, waste set
/ projection: 200 mm
/ handle variant: flat handle
/ spray type: normal spray
/ maximum flow rate at 3 bar: 5 l/min
/ ceramic cartridge
/ temperature limitation adjustable
/ suitable for continuous flow water heaters
/ non-closing waste set
/ connection type: basic set
/ connection dimension: DN15
/ EU taxonomy: max. 6 l/min – Substantial Contribution (SC) possible

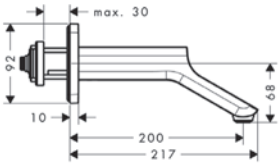

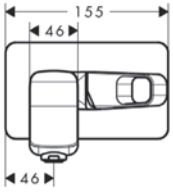

Special feature

Technologies

Projection (mm)	Max. flow rate at 3 bar (l/min)	Finish	Code no.
200	5	Chrome	11026000
		AXOR FinishPlus*	11026XXX

This product is not available in the AXOR FinishPlus surfaces Polished and Brushed Black Chrome.

Required parts:		Code no.
	AXOR Starck Basic set	10902180

Optional parts:		Code no.
	AXOR Urquiola Extension set 28 mm for single lever basin mixer wall-mounted	11980000

*AXOR FinishPlus: For further AXOR FinishPlus surfaces please see the AXOR FinishPlus overview on page 44.

3-hole basin mixers

Features of all variants

/ consists of: 3-hole basin mixer, waste set
/ ComfortZone: 50
/ projection: 180 mm
/ spout height: 45 mm
/ handle variant: flat handle
/ spray type: normal spray
/ maximum flow rate at 3 bar: 5 l/min
/ ceramic valves hot/cold 90°
/ suitable for continuous flow water heaters
/ pop-up waste set G 1¼
/ connection type: G ⅜ hose connections
/ connection dimension: DN15
/ EU taxonomy: max. 6 l/min – Substantial Contribution (SC) possible

with plate

with escutcheons

Special feature

EcoSmart

Technologies

Quick Clean

AirPower

Comfort Zone

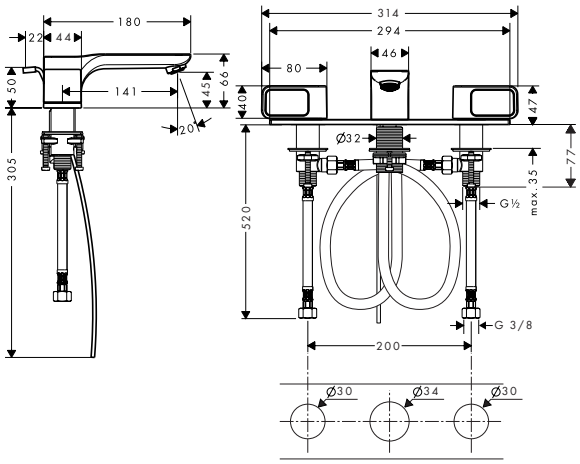

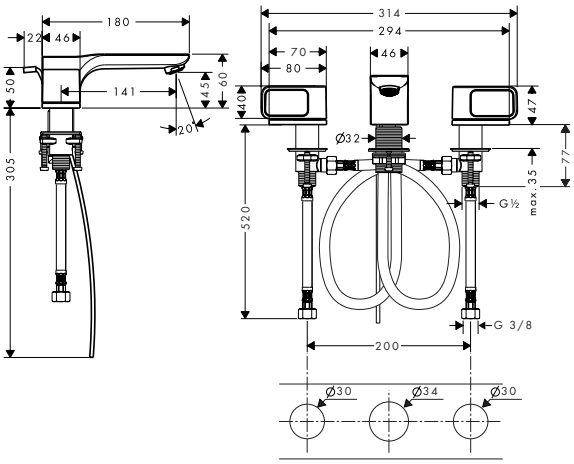

Overview variants

ComfortZone	Projection (mm)	Spout height (mm)	Cover	Finish	Code no.
50	180	45	plate	Chrome	11040000
				AXOR FinishPlus*	11040XXX
50	180	45	escutcheons	Chrome	11041000
				AXOR FinishPlus*	11041XXX

This product is not available in the AXOR FinishPlus surfaces Polished and Brushed Black Chrome.

Optional parts:	For	Code no.
Hose extension set for 3-hole basin mixer	11041XXX	38959000

3-hole basin mixers wall mounted

Features of all variants

/ consists of: 3-hole basin mixer for concealed installation wall-mounted, waste set
/ handle variant: flat handle
/ spray type: normal spray
/ maximum flow rate at 3 bar: 5 l/min
/ ceramic valves hot/cold 90°
/ suitable for continuous flow water heaters
/ non-closing waste set
/ connection type: basic set
/ connection dimension: DN15
/ EU taxonomy: max. 6 l/min – Substantial Contribution (SC) possible

168

228

Special feature

EcoSmart

Technologies

Quick clean

AirPower

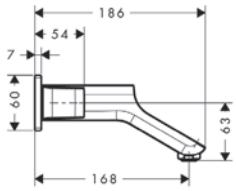

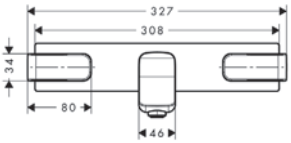

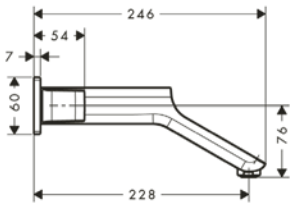

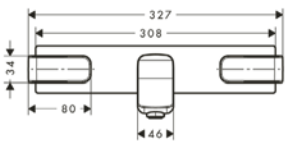

Measurements within scale drawings are in mm.
Technical specifications and units of measure are subject to change.

3-hole basin mixers wall mounted

Overview variants

Projection (mm)	Finish	Code no.
168	Chrome	11042000
	AXOR FinishPlus*	11042XXX
228	Chrome	11043000
	AXOR FinishPlus*	11043XXX

This product is not available in the AXOR FinishPlus surfaces Polished and Brushed Black Chrome.

Required parts:	Code no.
Basic set for 3-hole basin mixer for concealed installation wall-mounted	10303180

Single lever bidet mixer with pop-up waste set

Features of all variants

/ consists of: single lever bidet mixer, waste set
/ projection: 104 mm
/ spout height: 157 mm
/ ball-pivot joint
/ spray type: laminar spray
/ maximum flow rate at 3 bar: 7,2 l/min
/ ceramic cartridge
/ temperature limitation adjustable
/ suitable for continous flow water heaters
/ pop-up waste set G 1¼
/ connection type: G ⅜ hose connections
/ connection dimension: DN15

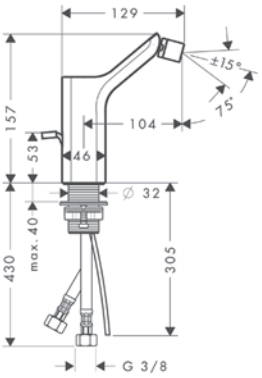

Projection (mm)	Spout height (mm)	Finish	Code no.
104	157	Chrome	11220000
		AXOR FinishPlus*	11220XXX

This product is not available in the AXOR FinishPlus surfaces Polished and Brushed Black Chrome.

Single lever bath mixer for exposed installation

Features of all variants

/ 2 functions
/ projection: 198 mm
/ centre distance: 150 ± 16 mm
/ spray type mixer: normal spray
/ maximum flow rate at 3 bar: 24 l/min
/ flow rate for bath spout at 3 bar: 24 l/min
/ flow rate of hand shower at 3 bar: 18 l/min
/ ceramic cartridge
/ temperature limitation adjustable
/ diverter with automatic resetting
/ non-return valve
/ with silencer
/ suitable for continous flow water heaters
/ connection dimension: DN15
/ connection type: S-connections
/ wall-mounted
/ min. operating pressure: 1 bar
/ max. operating pressure: 10 bar

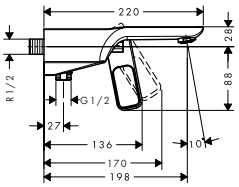

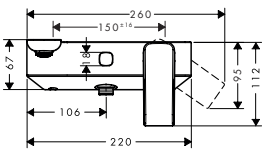

Technologies

Projection (mm)	Max. flow rate at 3 bar (l/min)	Finish	Code no.
198	24	Chrome	11420000
		AXOR FinishPlus*	11420XXX

This product is not available in the AXOR FinishPlus surfaces Polished and Brushed Black Chrome.

*AXOR FinishPlus: For further AXOR FinishPlus surfaces please see the AXOR FinishPlus overview on page 44.

Bath thermostat floor-standing

Features of all variants

/ consists of: bath thermostat floor standing, baton hand shower, shower hose, shower holder
/ projection 204 mm
/ 2 functions
/ thermostat cartridge, shut-off/ diverter valve
/ spray type mixer: normal spray
/ spray type hand shower: Rain, MonoRain
/ maximum flow rate at 3 bar: 21 l/min
/ flow rate for bath spout at 3 bar: 21 l/min
/ flow rate of hand shower at 3 bar: 14 l/min
/ min. operating pressure: 1 bar
/ max. operating pressure: 10 bar
/ Safety stop at 40 °C
/ temperature limitation adjustable
/ non-return valve
/ with automatic resetting
/ not suitable for continuous flow water heaters
/ connection dimension: DN15
/ connection type: basic set
/ deck mounted
/ dirt filter included

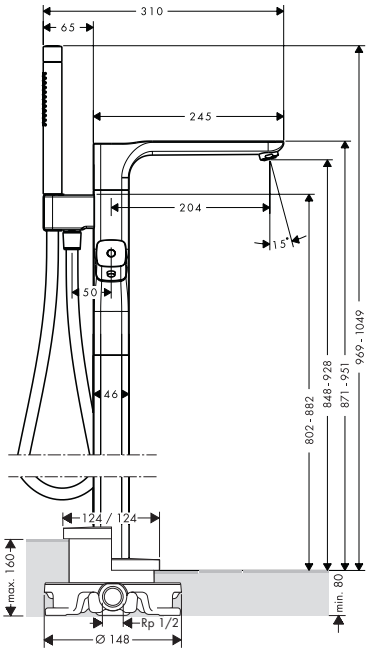

Special feature

Technologies

Spray types

Projection (mm)	Finish	Code no.
204	Chrome	11422000
	AXOR FinishPlus*	11422XXX

This product is not available in the AXOR FinishPlus surfaces Polished and Brushed Black Chrome.

Required parts:		Code no.
	Basic set for mixers floor-standing	10452180

Optional parts:		Code no.
	Sealing foil for basic set bath mixer floor-standing	96441000
	Extension 60 mm	92135000

Measurements within scale drawings are in mm.
Technical specifications and units of measure are subject to change.

Single lever bath mixer for concealed installation

Features

/ 2 functions
/ maximum flow rate at 3 bar: 22 l/min
/ ceramic cartridge
/ temperature limitation adjustable
/ diverter with automatic resetting
/ with silencer
/ suitable for continous flow water heaters
/ connection type: basic set
/ wall-mounted
/ min. operating pressure: 1 bar
/ max. operating pressure: 10 bar

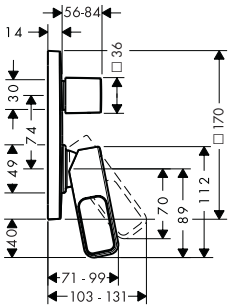

Finish	Code no.
Chrome	11425000
AXOR FinishPlus*	11425XXX

This product is not available in the AXOR FinishPlus surfaces Polished and Brushed Black Chrome.

Required parts (choose one):			Code no.
Option 1		AXOR iBox universal 2 Basic set	01400180
+		Adapter plate for iBox universal 2	13588000
Option 2		AXOR iBox universal Basic set	01700180

4-hole rim mounted bath mixer

Features of all variants

/ consists of: 4-hole rim mounted bath mixer, hand shower, shower hose, shower holder
/ 2 functions
/ projection: 198 mm
/ spray type mixer: normal spray
/ spray type hand shower: Rain, RainAir, WhirlAir
/ maximum pull-out length of hand shower: 1.10 m
/ maximum flow rate at 3 bar: 22 l/min
/ ceramic valves hot/cold 90°
/ diverter with automatic resetting
/ non-return valve
/ connection dimension: DN15
/ connection type: basic set
/ installation on bath rim
/ min. operating pressure: 1 bar
/ max. operating pressure: 10 bar
/ no additional maintenance opening required

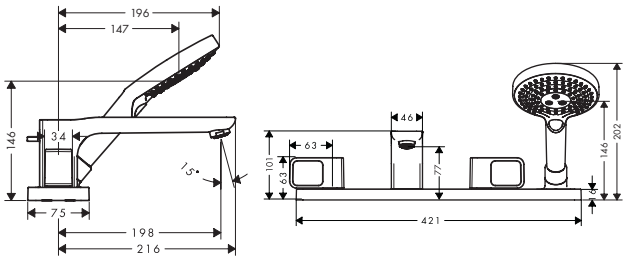

Technologies

Spray types

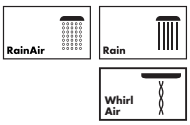

Max. flow rate at 3 bar (l/min)	Finish	Code no.
22	Chrome	11443000
	AXOR FinishPlus*	11443XXX

This product is not available in the AXOR FinishPlus surfaces Polished and Brushed Black Chrome.

Required parts:		Code no.
	Basic set for 4-hole rim mounted bath mixer	15480180

Optional parts:		Code no.
	AXOR Citterio Installation plate	39449000

*AXOR FinishPlus: For further AXOR FinishPlus surfaces please see the AXOR FinishPlus overview on page 44.

Single lever shower mixer for exposed installation

Features

/ 1 function
/ centre distance: 150 ± 16 mm
/ maximum flow rate at 3 bar: 28 l/min
/ ceramic cartridge
/ temperature limitation adjustable
/ non-return valve
/ with silencer
/ suitable for continous flow water heaters
/ hose connection: DN15
/ connection dimension: DN15
/ min. operating pressure: 1 bar
/ max. operating pressure: 10 bar
/ connection type: S-connections

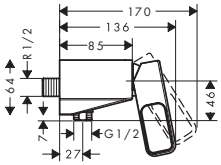

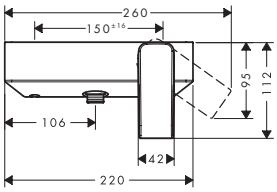

Finish	Code no.
Chrome	11620000
AXOR FinishPlus*	11620XXX

This product is not available in the AXOR FinishPlus surfaces Polished and Brushed Black Chrome.

Porter unit softsquare

Features

/ metal housing with internal water supply made of plastic
/ for shower hoses with a conical nut
/ integrated support function
/ metal
/ connection type: G ½

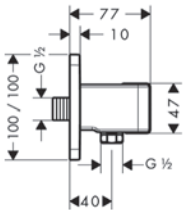

Finish	Code no.
Chrome	11626000
Matt Black	11626670
AXOR FinishPlus*	11626XXX

Thermostat for concealed installation with shut-off valve

Features of all variants

/ 1 function
/ thermostat cartridge, ceramic valves 90°
/ maximum flow rate at 3 bar: 26 l/min
/ min. operating pressure: 1 bar
/ max. operating pressure: 10 bar
/ Safety stop at 40 °C
/ temperature limitation adjustable
/ non-return valve
/ with silencer
/ connection type: basic set

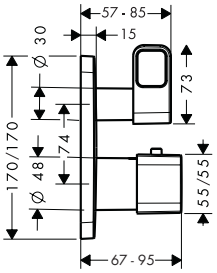

Special feature

Technologies

Max. flow rate at 3 bar (l/min)	Finish	Code no.
26	Chrome	11732000
	AXOR FinishPlus*	11732XXX

This product is not available in the AXOR FinishPlus surfaces Polished and Brushed Black Chrome.

Measurements within scale drawings are in mm.
Technical specifications and units of measure are subject to change.

Thermostat for concealed installation with shut-off valve

Required parts (choose one):			Code no.
Option 1		AXOR iBox universal 2 Basic set	01400180
+		Adapter plate for iBox universal 2	13588000
Option 2		AXOR iBox universal Basic set	01700180

Thermostat for concealed installation with shut-off/ diverter valve

Features of all variants

/ 2 functions
/ thermostat cartridge, shut-off valve
/ maximum flow rate at 3 bar: 29 l/min
/ min. operating pressure: 1 bar
/ max. operating pressure: 10 bar
/ Safety stop at 40 °C
/ temperature limitation adjustable
/ non-return valve
/ with silencer
/ connection type: basic set

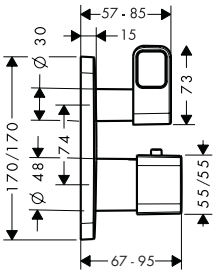

Special feature

Technologies

Max. flow rate at 3 bar (l/min)	Finish	Code no.
29	Chrome	11733000
	AXOR FinishPlus*	11733XXX

This product is not available in the AXOR FinishPlus surfaces Polished and Brushed Black Chrome.

Required parts (choose one):			Code no.
Option 1		AXOR iBox universal 2 Basic set	01400180
+		Adapter plate for iBox universal 2	13588000
Option 2		AXOR iBox universal Basic set	01700180

*AXOR FinishPlus: For further AXOR FinishPlus surfaces please see the AXOR FinishPlus overview on page 44.

Possible product combinations

Showers

AXOR ShowerSphere
Overhead shower 370/220 2jet with adjustable shower arm

#39745XXX

page 417

AXOR Citterio C
Overhead shower 270/270 1jet EcoSmart with shower arm

#28791XXX

page 95

AXOR One
Overhead shower 280 1jet with ceiling connection

#48493XXX

page 136

Shower controls

AXOR ShowerSelect ID
Thermostat for concealed installation softsquare for 2 functions

#36754XXX

page 88

AXOR One
Thermostatic module for concealed installation for 2 functions

#45712XXX

page 123

Further complementary products

AXOR Universal Softsquare
Rail bath towel holder 600 mm

#42832XXX

page 569

AXOR FlushPlate
Flush plate for Geberit Sigma

#42530XXX

page 581

AXOR Bidette Showers
Bidette hand shower 1jet softsquare for cold water with shower holder and shower hose 1.25 m

#29241XXX

page 463

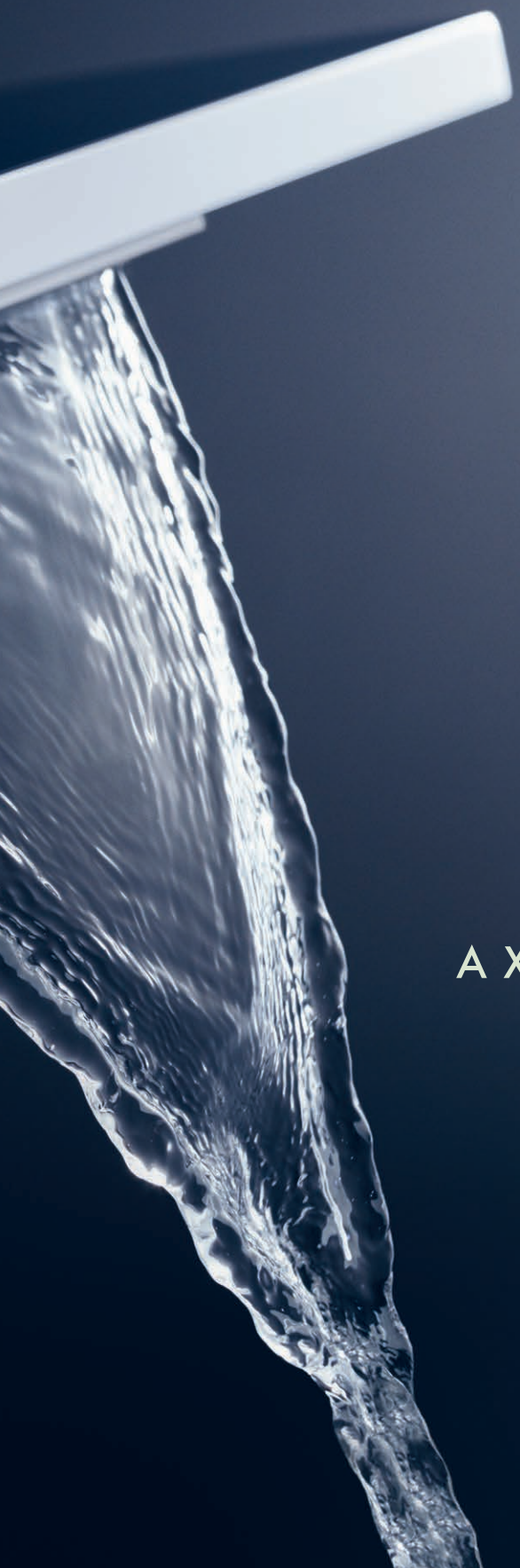

Basin

Wash bowls and wash basins

Bath

Complementary products

AXOR MASSAUD

DESIGN
–
JEAN-MARIE MASSAUD

AKOR

"I wanted to make the functional elements disappear to create the landscape for a holistic experience with water." JEAN-MARIE MASSAUD

AXOR Massaud

The peace of nature

AXOR Massaud perfects the connection between people and nature. The collection makes water into a source of wellbeing and composure. Celebrates it in the form of a natural waterfall flowing from a shelf. The collection embodies uncompromising, organic avant-garde design inspired by the elements of nature. Far from all technology, to enjoy the moment—with water rather than with a mixer.

Design: Jean-Marie Massaud

Characteristic design feature:

Organic design language inspired by nature: Expansive surfaces meet soft curves that transition to radical geometric forms. The body is a blade of grass. The cascading spray a natural waterfall.

The designer's idea:

The natural world and its elements:
A sensuous waterfall flowing from a shelf—this is AXOR Massaud. The mixer is not a technical object. Rather, it was designed to present the element of water and create an ingenious connection between people and nature. To provide a source of calmness and contemplation.

Special collection highlights:

/ The mixer gives added value as a shelf
/ Avant-garde water design: the cascading waterfall is not aerated – this nod to a natural waterfall resulted from intensive development work
/ Matching wash basins in organic design
/ The first collection in cooperation with Jean-Marie Massaud

→ Learn more about AXOR Massaud: axor-design.com

Harmonious connection between natural aesthetics and modern design

AXOR Massaud brings the natural world into the bathroom, allowing us to experience the element of water in all its sensual glory. A vigorous stream gushes from the mixer like a waterfall. Behind this gorgeous cascade is advanced water-saving technology. All rounded out by the harmonious relation between the wash basin, with its organic form, and the mixer.

Generously sized shelf

The faucet design provides plenty of space—for things like accessories

Joystick cartridge

Intricate pin handle mounted on the side for intuitive operation

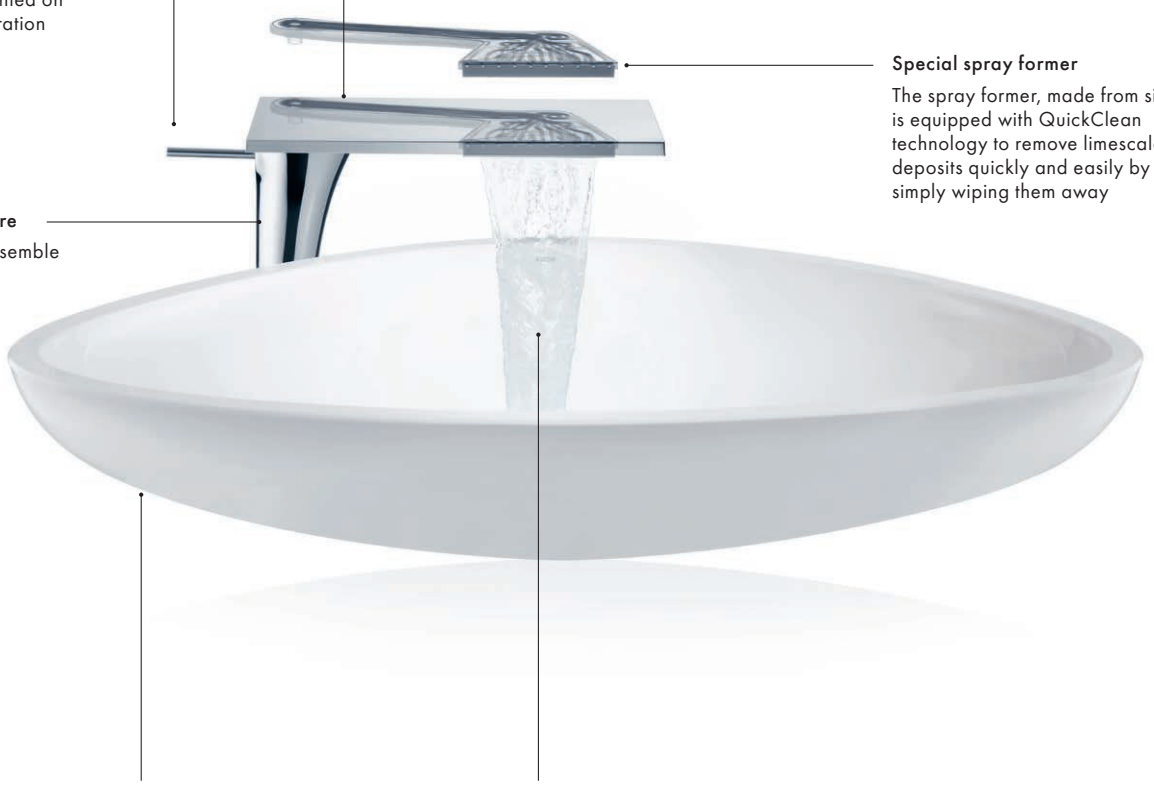

Special spray former

The spray former, made from silicone, is equipped with QuickClean technology to remove limescale deposits quickly and easily by simply wiping them away

Design inspired by nature

The body is formed to resemble a blade of grass

Matching wash bowl

The geometry of the organically shaped wash bowl coordinates perfectly with the water spray from the mixer. To prevent splashing, the use of AXOR Massaud wash bowls or the built-in wash basin, or other extra-deep sinks, is recommended

Non-aerated flood spray

Developed especially for the AXOR Massaud collection, the spray model recalls a natural waterfall. In this way, AXOR Massaud provides users with a completely natural experience with water at the wash basin or bathtub

The floor-standing bathtub mixer with a non-aerated flood spray that flows from the mixer into the tub like a natural waterfall.

Single lever basin mixers

Features of all variants

/ consists of: single lever basin mixer, waste set
/ handle variant: cylinder handle
/ spray type: wide flood jet
/ maximum flow rate at 3 bar: 4 l/min
/ ceramic cartridge
/ suitable for continuous flow water heaters
/ non-closing waste set
/ connection type: G ⅜ hose connections
/ connection dimension: DN15
/ EU taxonomy: max. 6 l/min – Substantial Contribution (SC) possible

110

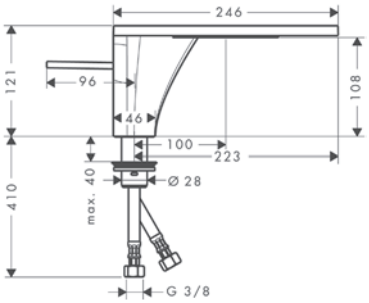

220

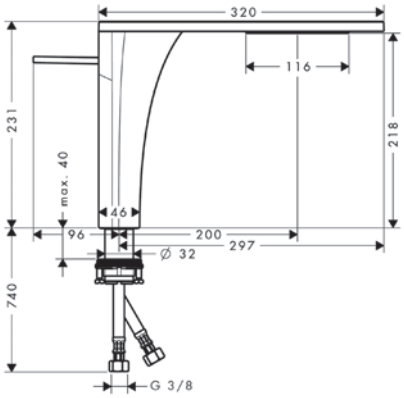

Special feature

EcoSmart

Technologies

Quick Clean
Comfort Zone

Spray types

RainFlow

Overview variants

ComfortZone	Projection (mm)	Spout height (mm)	For wash bowls	Finish	Code no.
110	100	108	–	Chrome	18010000
				AXOR FinishPlus*	18010XXX
220	200	218	■	Chrome	18020000
				AXOR FinishPlus*	18020XXX

Wash bowl 570/450

Features

/ material: mineral cast with gelcoat
/ without tap hole
/ without overflow
/ only in conjunction with basin mixers without pull rod
/ installation type: built-on
/ overflow class: CL00

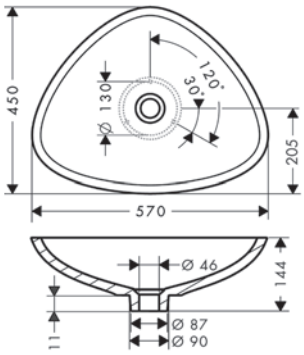

Finish	Code no.
White	42305000

Optional parts:		Finish	Code no.
	Waste set non-closing for washbasins	Chrome	51301000
		AXOR FinishPlus*	51301XXX

Measurements within scale drawings are in mm.
Technical specifications and units of measure are subject to change.

Wash bowl 800/450

Features

/ material: mineral cast with gelcoat
/ without tap hole
/ without overflow
/ without waste set
/ only in conjunction with basin mixers without pull rod
/ installation type: built-on
/ overflow class: CL00

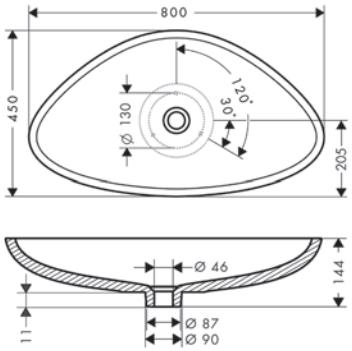

Finish	Code no.
White	42300000

Optional parts:		Finish	Code no.
	Waste set non-closing for washbasins	Chrome	51301000
		AXOR FinishPlus*	51301XXX

Single lever bath mixer floor-standing

Features

/ consists of: single lever bath mixer floor standing, baton hand shower, shower hose, shower holder
/ 2 functions
/ projection: 248 mm
/ spray type mixer: wide flood jet
/ spray type hand shower: Rain, MonoRain
/ maximum flow rate at 3 bar: 17 l/min
/ flow rate for bath spout at 3 bar: 17 l/min
/ flow rate of hand shower at 3 bar: 14 l/min
/ ceramic cartridge
/ temperature limitation adjustable
/ diverter with automatic resetting
/ non-return valve
/ connection dimension: DN15
/ connection type: basic set
/ deck mounted
/ min. operating pressure: 1 bar
/ max. operating pressure: 10 bar

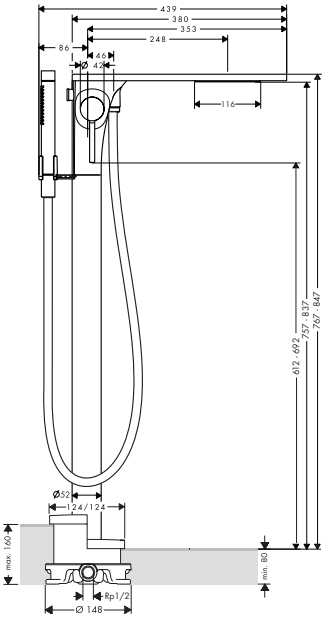

Technologies

Spray types

Finish	Code no.
Chrome	18450000
AXOR FinishPlus*	18450XXX

Required parts:		Code no.
	Basic set for mixers floor-standing	10452180

Optional parts:		Code no.
	Sealing foil for basic set bath mixer floor-standing	96441000
	AXOR Starck Extension 60 mm for pipe	97686000

*AXOR FinishPlus: For further AXOR FinishPlus surfaces please see the AXOR FinishPlus overview on page 44.

Possible product combinations

Showers

AXOR ShowerSolutions
Overhead shower 300/300 2jet with shower arm

#35318XXX

page 430

AXOR ShowerSolutions
Overhead shower 460/300 3jet with shower arm and square escutcheon

#35282XXX

page 433

AXOR ShowerComposition
Shower module 250/250 2jet with shoulder shower

#12594XXX

page 397

Shower controls

AXOR ShowerSelect ID
Thermostat for concealed installation square for 2 functions

#36752XXX

page 519

AXOR ShowerComposition
Thermostatic module 540/110 for concealed installation for 3 functions

#12572XXX

page 400

AXOR ShowerSolutions
Thermostatic module Select 600/90 for concealed installation for 4 functions

#18357XXX

page 527

Further complementary products

AXOR Universal Rectangular
Bath towel rail 600 mm

#42661XXX

page 554

AXOR Suite Basins & Bathtub
Wash bowl 400/400 without tap hole and overflow

#42003XXX

page 603

AXOR Drain
Finish set shower drain 700

#42520XXX

page 632

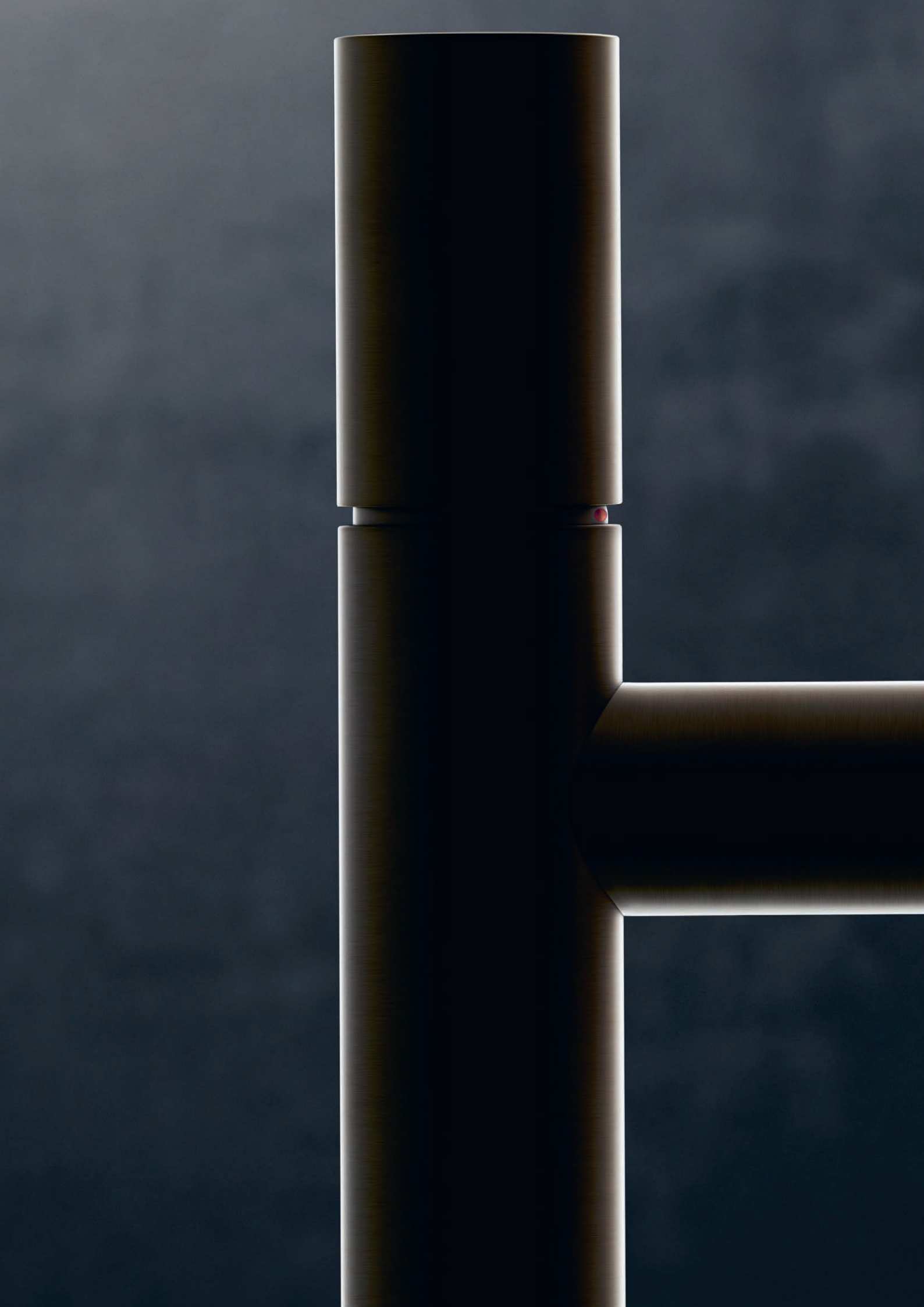

Basin

Bidet

Bath

Shower

Thermostatic mixers / valves / diverters

Complementary products

AXOR UNO

DESIGN
–
PHOENIX

"Implemented at the highest technological levels, AXOR Uno is the quintessence of purism: Clean, minimalist and subtle."

ANDREAS DIEFENBACH, PHOENIX

AXOR Uno

The power of simplicity

AXOR Uno is about the purity of perfection. And about the simple shapes that form a visible design. Inspired by the original purists. The mixer consists of pipes– the original form of water transport – put together at precise right angles. Subtly excessive, based on the golden ratio. This ascetic form exudes a great strength. The power of simplicity.

Design: PHOENIX

Characteristic design feature:

Purist mixer design: A clear design language with basic cylindrical forms. Precisely put together at right angles. Subtly excessive, based on the golden ratio.

The designer's idea:

An appreciation of design and material: With the pipe, one of the oldest forms of water transport, AXOR Uno embodies radical reduction to the essentials. The material and the design are the clear focus of the mixers.

Special collection highlights:

/ The design of the AXOR Uno 200 wash basin mixers is based on the principle of the golden ratio, a classic proportional relationship

/ The perfect addition to AXOR Uno in the shower: AXOR Showerpipe 800 – also rigorously purist in design

/ AXOR Uno is a redesign of the successful AXOR Uno collection introduced in 1985

→ Learn more about AXOR Uno: axor-design.com

Purism. Without exception

Characterized by clear lines and cylinders put together at precise right angles, AXOR Uno embodies purism at its finest. With its sleek zero handle, maximum ergonomics meet minimalist design.

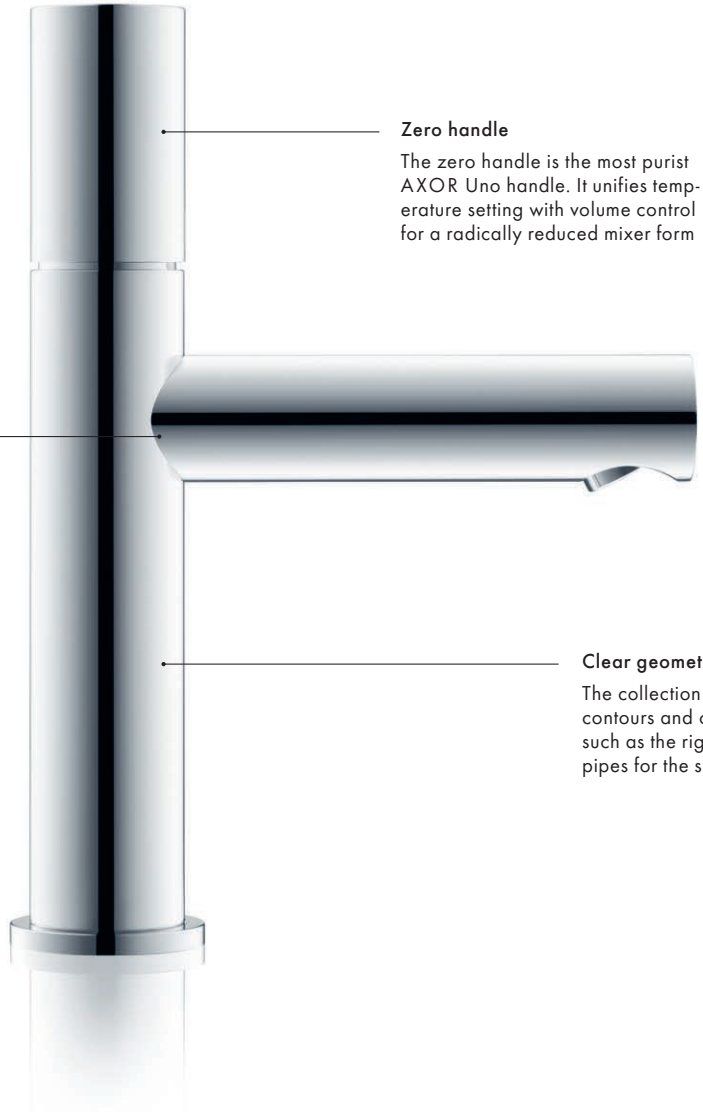

Zero handle

The zero handle is the most purist AXOR Uno handle. It unifies temperature setting with volume control for a radically reduced mixer form

Interlocking pipes

Pipes, precisely put together, are the characteristic feature of AXOR Uno and underscore the purist look

Clear geometry

The collection features concise contours and clear geometry, such as the right angle of the two pipes for the spout and body

For the four-hole rim-mounted bath mixer with zero handles (# 45444000), the baton hand shower 2jet (# 28532000) is included in the scope of delivery.

A special bathroom highlight is the floor-standing bath spout (# 45412000) in combination with thermostatic module Select for 2 functions (# 18355000).

Single lever basin mixers with zero handle

Features of all variants

/ consists of: single lever basin mixer, waste set
/ handle variant: cylinder handle
/ spray type: laminar spray
/ maximum flow rate at 3 bar: 5 l/min
/ ceramic cartridge
/ temperature limitation adjustable
/ suitable for continuous flow water heaters
/ connection type: G ⅜ hose connections
/ connection dimension: DN15
/ EU taxonomy: max. 6 l/min - Substantial Contribution (SC) possible

80

110

200

260

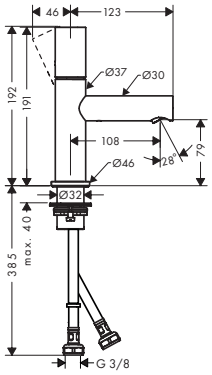

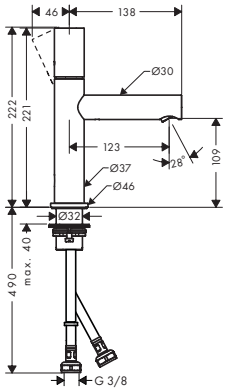

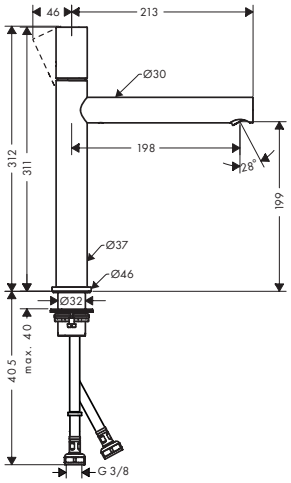

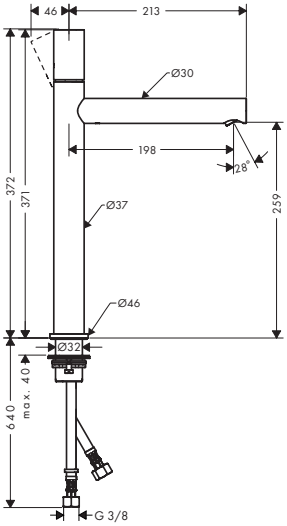

Special feature

EcoSmart

Technologies

Comfort Zone

Overview variants

ComfortZone	Projection (mm)	Spout height (mm)	Waste set	For wash bowls	Finish	Code no.
80	108	79	non-closing	–	Chrome	45005000
					Brushed Black Chrome	45005340
					Brushed Nickel	45005820
					AXOR FinishPlus*	45005XXX
110	123	109	pop-up	–	Chrome	45001000
					Brushed Black Chrome	45001340
					Brushed Nickel	45001820
					AXOR FinishPlus*	45001XXX
110	123	109	non-closing	–	Chrome	45002000
					Brushed Black Chrome	45002340
					Brushed Nickel	45002820
					AXOR FinishPlus*	45002XXX
200	198	199	non-closing	■	Chrome	45003000
					Brushed Black Chrome	45003340
					Brushed Nickel	45003820
					AXOR FinishPlus*	45003XXX

Measurements within scale drawings are in mm.
Technical specifications and units of measure are subject to change.

Single lever basin mixers with zero handle

Overview variants

ComfortZone	Projection (mm)	Spout height (mm)	Waste set	For wash bowls	Finish	Code no.
260	198	259	non-closing	■	Chrome	45004000
					Brushed Black Chrome	45004340
					Brushed Nickel	45004820
					AXOR FinishPlus*	45004XXX

Basin mixer Select 220 with pop-up waste set

Features of all variants

/ consists of: basin mixer, waste set
/ ComfortZone: 220
/ projection: 160 mm
/ spout height: 219 mm
/ handle variant: cylinder handle
/ swivel range 110°
/ spray type: normal spray
/ maximum flow rate at 3 bar: 5 l/min
/ Start/stop valve to operate the functions
/ temperature limitation adjustable
/ separation of temperature control and open/close
/ suitable for continuous flow water heaters
/ pop-up waste set G 1¼
/ connection type: G ⅜ hose connections
/ connection dimension: DN15
/ EU taxonomy: max. 6 l/min - Substantial Contribution (SC) possible

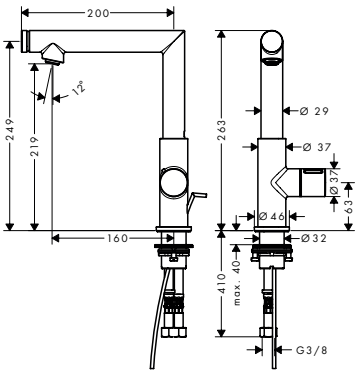

Special feature

Technologies

ComfortZone	Projection (mm)	Spout height (mm)	Waste set	Finish	Code no.
220	160	219	pop-up	Chrome	45016000
				Brushed Black Chrome	45016340
				Brushed Nickel	45016820
				AXOR FinishPlus*	45016XXX

Pillar tap 70 without waste set

Features of all variants

/ ComfortZone: 70
/ projection: 100 mm
/ spout height: 65 mm
/ handle variant: cylinder handle
/ spray type: normal spray
/ maximum flow rate at 3 bar: 5 l/min
/ ceramic valve 180°
/ for cold water connection
/ connection type: G ⅜ hose connection
/ connection dimension: DN15
/ EU taxonomy: max. 6 l/min - Substantial Contribution (SC) possible

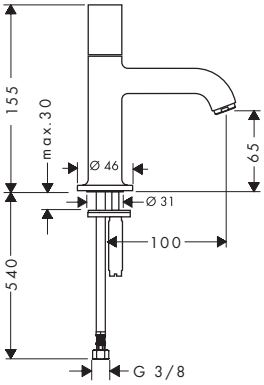

Special feature

Technologies

For more information about this product, please see the next page.

*AXOR FinishPlus: For further AXOR FinishPlus surfaces please see the AXOR FinishPlus overview on page 44.

Pillar tap 70 without waste set

ComfortZone	Projection (mm)	Spout height (mm)	Waste set	Finish	Code no.
70	100	65	without	Chrome	38130000
				Brushed Black Chrome	38130340
				Brushed Nickel	38130820
				AXOR FinishPlus*	38130XXX

Pillar tap Select 80 without waste set

Features of all variants

/ ComfortZone: 80
/ projection: 109 mm
/ spout height: 75 mm
/ handle variant: cylinder handle
/ spray type: normal spray
/ maximum flow rate at 3 bar: 5 l/min
/ Start/stop valve to operate the functions
/ for cold water connection
/ connection type: G ⅜ hose connection
/ connection dimension: DN15
/ EU taxonomy: max. 6 l/min - Substantial Contribution (SC) possible

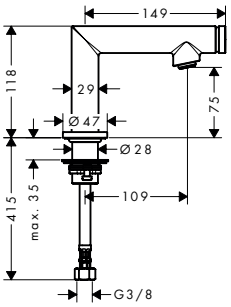

Special feature

EcoSmart

Technologies

Quick Clean, AirPower, Comfort Zone, Select

ComfortZone	Projection (mm)	Spout height (mm)	Waste set	Finish	Code no.
80	109	75	without	Chrome	45130000
				Brushed Black Chrome	45130340
				Brushed Nickel	45130820
				AXOR FinishPlus*	45130XXX

Basin mixers for concealed installation wall-mounted Select

Features of all variants

/ consists of: basin mixer for concealed installation wall-mounted, waste set
/ handle variant: cylinder handle
/ spray type: normal spray
/ maximum flow rate at 3 bar: 5 l/min
/ Start/stop valve to operate the functions
/ separation of temperature control and open/close
/ suitable for continuous flow water heaters
/ non-closing waste set
/ connection type: basic set
/ connection dimension: DN15
/ handle can be positioned on the right or left, depending on the basic set installation
/ EU taxonomy: max. 6 l/min - Substantial Contribution (SC) possible

158

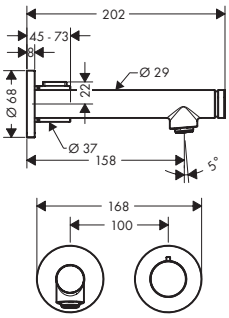

221

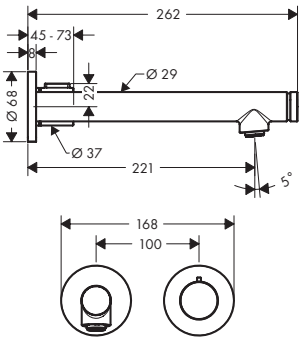

Special feature

EcoSmart

Technologies

Quick Clean, AirPower, Select

Certificates/declarations

EPD

Measurements within scale drawings are in mm.
Technical specifications and units of measure are subject to change.

Basin mixers for concealed installation wall-mounted Select

Overview variants

Projection (mm)	Finish	Code no.
158	Chrome	45112000
	Brushed Black Chrome	45112340
	Brushed Nickel	45112820
	AXOR FinishPlus*	45112XXX
221	Chrome	45113000
	Brushed Black Chrome	45113340
	Brushed Nickel	45113820
	AXOR FinishPlus*	45113XXX

Required parts:		Code no.
	Basic set for single lever basin mixer for concealed installation wall-mounted	13623180

Optional parts:		Code no.
	Extension set 25 mm for single lever basin mixer wall-mounted	13586000

Single lever basin mixers for concealed installation wall-mounted with escutcheons

Features of all variants

/ consists of: single lever basin mixer for concealed installation wall-mounted, waste set
/ handle variant: pin handle
/ spray type: normal spray
/ maximum flow rate at 3 bar: 5 l/min
/ ceramic cartridge
/ suitable for continuous flow water heaters
/ non-closing waste set
/ connection type: basic set
/ connection dimension: DN15
/ handle can be positioned on the right or left, depending on the basic set installation
/ EU taxonomy: max. 6 l/min - Substantial Contribution (SC) possible

165

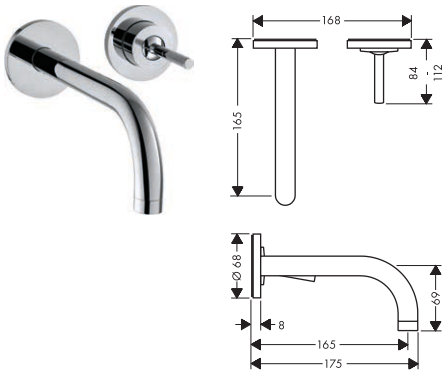

225

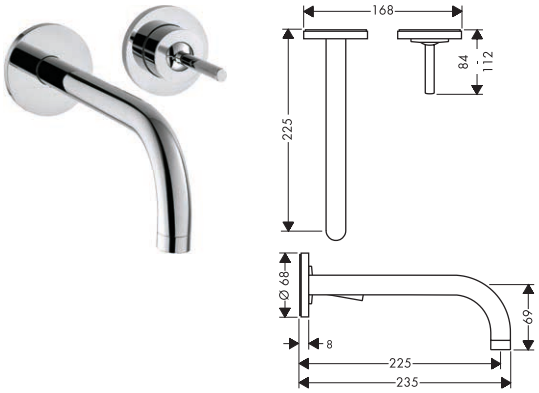

Special feature

Technologies

Certificates/declarations

Overview variants

Projection (mm)	Handle version	Finish	Code no.
165	pin	Chrome	38113000
		Brushed Black Chrome	38113340
		Brushed Nickel	38113820
		AXOR FinishPlus*	38113XXX
225	pin	Chrome	38116000
		Brushed Black Chrome	38116340
		Brushed Nickel	38116820
		AXOR FinishPlus*	38116XXX

Required parts:		Code no.
	Basic set for single lever basin mixer for concealed installation wall-mounted	13623180

For more information about this product, please see the next page.

*AXOR FinishPlus: For further AXOR FinishPlus surfaces please see the AXOR FinishPlus overview on page 44.

Single lever basin mixers for concealed installation wall-mounted with escutcheons

Optional parts:		Code no.
	Extension set 25 mm for single lever basin mixer wall-mounted	13586000

Single lever basin mixers for concealed installation wall-mounted with plate

Features of all variants

/ consists of: single lever basin mixer for concealed installation wall-mounted, waste set
/ handle variant: pin handle
/ spray type: normal spray
/ maximum flow rate at 3 bar: 5 l/min
/ ceramic cartridge
/ suitable for continuous flow water heaters
/ non-closing waste set
/ connection type: basic set
/ connection dimension: DN15
/ handle can be positioned on the right or left, depending on the basic set installation
/ EU taxonomy: max. 6 l/min - Substantial Contribution (SC) possible

165

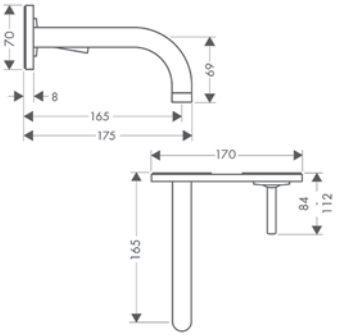

225

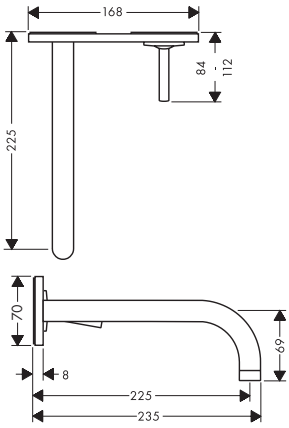

Special feature

EcoSmart

Technologies

AirPower

Overview variants

	Projection (mm)	Finish	Code no.
	165	Chrome	38112000
		Brushed Black Chrome	38112340
		Brushed Nickel	38112820
		AXOR FinishPlus*	38112XXX
	225	Chrome	38115000
		Brushed Black Chrome	38115340
		Brushed Nickel	38115820
		AXOR FinishPlus*	38115XXX

Required parts:		Code no.
	Basic set for single lever basin mixer for concealed installation wall-mounted	13623180

Optional parts:		Code no.
	Extension set 25 mm for single lever basin mixer wall-mounted	13586000

Measurements within scale drawings are in mm.
Technical specifications and units of measure are subject to change.

3-hole basin mixer 200 with zero handles and pop-up waste set

Features of all variants

/ consists of: 3-hole basin mixer, waste set
/ ComfortZone: 200
/ projection: 183 mm
/ spout height: 201 mm
/ handle variant: cylinder handle
/ swivel range 110°
/ spray type: laminar spray
/ maximum flow rate at 3 bar: 5 l/min
/ ceramic valves hot/cold 90°
/ suitable for continuous flow water heaters
/ pop-up waste set G 1¼
/ connection type: G ⅜ hose connections
/ connection dimension: DN15
/ EU taxonomy: max. 6 l/min - Substantial Contribution (SC) possible

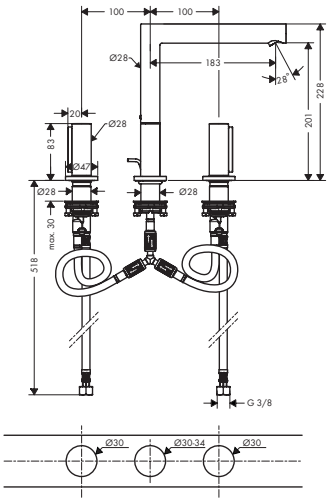

Special feature

Technologies

ComfortZone	Projection (mm)	Spout height (mm)	Spray types	Waste set	Handle version	Finish	Code no.
200	183	201	laminar spray	pop-up	zero	Chrome	45133000
						Brushed Black Chrome	45133340
						Brushed Nickel	45133820
						AXOR FinishPlus*	45133XXX

Optional parts:	Code no.
Hose extension set for 3-hole basin mixer	38959000

Single lever basin mixer floor-standing with zero handle without waste set

Features of all variants

/ projection: 260 mm
/ handle variant: cylinder handle
/ spray type: laminar spray
/ maximum flow rate at 3 bar: 5 l/min
/ ceramic cartridge
/ temperature limitation adjustable
/ suitable for continuous flow water heaters
/ connection type: basic set
/ connection dimension: DN15
/ EU taxonomy: max. 6 l/min - Substantial Contribution (SC) possible

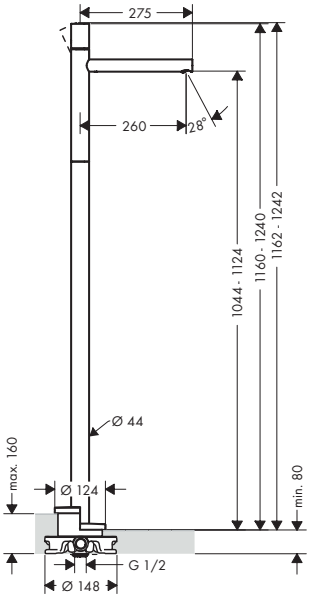

Special feature

For more information about this product, please see the next page.

*AXOR FinishPlus: For further AXOR FinishPlus surfaces please see the AXOR FinishPlus overview on page 44.

Single lever basin mixer floor-standing with zero handle without waste set

Projection (mm)	Spray types	Handle version	Finish	Code no.
260	laminar spray	zero	Chrome	45037000
			Brushed Black Chrome	45037340
			Brushed Nickel	45037820
			AXOR FinishPlus*	45037XXX

Required parts:		Code no.
	Basic set for mixers floor-standing	10452180

Optional parts:		Code no.
	Sealing foil for basic set bath mixer floor-standing	96441000
	AXOR Starck Extension 60 mm for pipe	97686000

Single lever bidet mixer with zero handle and pop-up waste set

Features of all variants

/ consists of: single lever bidet mixer, waste set
/ projection: 124 mm
/ spout height: 93 mm
/ aerator with ball pivot
/ spray type: normal spray
/ maximum flow rate at 3 bar: 5 l/min
/ ceramic cartridge
/ temperature limitation adjustable
/ suitable for continous flow water heaters
/ pop-up waste set G 1¼
/ connection type: G ⅜ hose connections
/ connection dimension: DN15
/ EU taxonomy: max. 6 l/min - Substantial Contribution (SC) possible

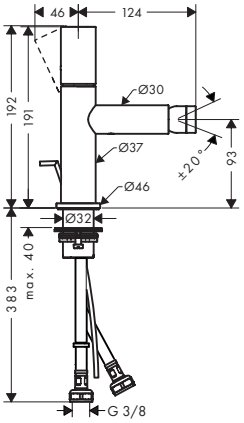

Special feature

Technologies

Projection (mm)	Spout height (mm)	Handle version	Finish	Code no.
124	93	zero	Chrome	45200000
			Brushed Black Chrome	45200340
			Brushed Nickel	45200820
			AXOR FinishPlus*	45200XXX

Measurements within scale drawings are in mm.
Technical specifications and units of measure are subject to change.

Single lever bath mixer floor-standing with zero handle

Features of all variants

/ consists of: single lever bath mixer floor standing, baton hand shower, shower holder, shower hose
/ 2 functions
/ projection: 244 mm
/ spray type mixer: normal spray
/ maximum flow rate at 3 bar: 18 l/min
/ flow rate for bath spout at 3 bar: 18 l/min
/ flow rate of hand shower at 3 bar: 13 l/min
/ ceramic cartridge
/ temperature limitation adjustable
/ diverter with automatic resetting
/ non-return valve
/ connection dimension: DN15
/ connection type: basic set
/ deck mounted
/ min. operating pressure: 1 bar
/ max. operating pressure: 10 bar
/ no additional maintenance opening required
/ spray type hand shower: Rain, MonoRain

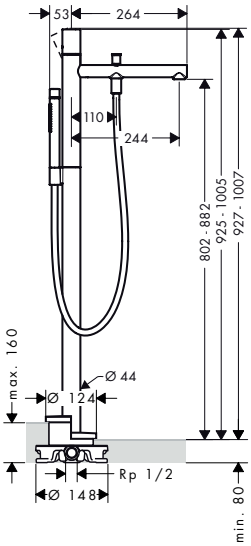

Technologies

Spray types

Projection (mm)	Handle version	Finish	Code no.
244	zero	Chrome	45416000
		Brushed Black Chrome	45416340
		Brushed Nickel	45416820
		AXOR FinishPlus*	45416XXX

Required parts:		Code no.
	Basic set for mixers floor-standing	10452180

Optional parts:		Code no.
	Sealing foil for basic set bath mixer floor-standing	96441000
	AXOR Starck Extension 60 mm for pipe	97686000

*AXOR FinishPlus: For further AXOR FinishPlus surfaces please see the AXOR FinishPlus overview on page 44.

Single lever bath mixers for concealed installation

Features of all variants

/ 2 functions
/ ceramic cartridge
/ temperature limitation adjustable
/ diverter with automatic resetting
/ with silencer
/ suitable for continous flow water heaters
/ connection type: basic set
/ wall-mounted
/ min. operating pressure: 1 bar
/ max. operating pressure: 10 bar

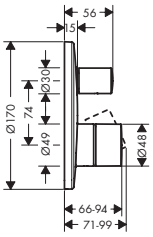

Overview variants

Security combination EN 1717	Max. flow rate at 3 bar (l/min)	Finish	Code no.
–	28	Chrome	45405000
		Brushed Black Chrome	45405340
		Brushed Nickel	45405820
		AXOR FinishPlus*	45405XXX
■	25	Chrome	45407000
		Brushed Black Chrome	45407340
		Brushed Nickel	45407820
		AXOR FinishPlus*	45407XXX

Required parts (choose one):			Code no.
Option 1		AXOR iBox universal 2 Basic set	01400180
+		Adapter plate for iBox universal 2	13588000
Option 2		AXOR iBox universal Basic set	01700180

Rim mounted bath set with hand shower

Features

/ consists of: hand shower, shower holder, shower hose, Secubox, Secuflex hose brake, hose insert
/ suitable for for installation on bath rim or tile surround (no mounting plate available)
/ connection dimension: DN15
/ drilling diameter on bath tub: Ø 50 mm
/ maximum pull-out length of hand shower: 1.10 m

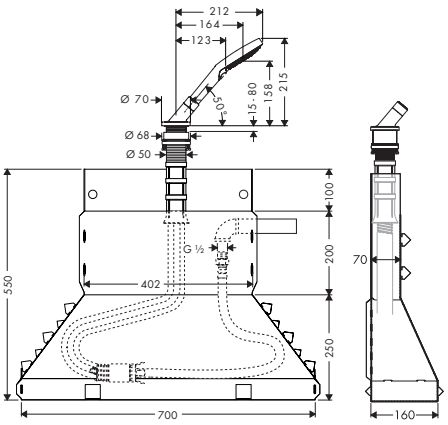

Finish	Code no.
Chrome	19418000
Brushed Bronze	19418140
Brushed Black Chrome	19418340
Brushed Nickel	19418820
Polished Gold Optic	19418990
AXOR FinishPlus*	19418XXX

Optional parts:		Code no.
	Secuflex insert extension	98806000

Measurements within scale drawings are in mm.
Technical specifications and units of measure are subject to change.

4-hole rim mounted bath mixer with zero handles

Features of all variants

/ consists of: 4-hole rim mounted bath mixer, baton hand shower, Secuflex hose set, shower holder
/ 2 functions
/ projection: 152 mm
/ spray type mixer: normal spray
/ maximum pull-out length of hand shower: 1.10 m
/ maximum flow rate at 3 bar: 22 l/min
/ flow rate for bath spout at 3 bar: 22 l/min
/ flow rate of hand shower at 3 bar: 16 l/min
/ ceramic valves hot/cold 90°
/ connection dimension: DN15
/ connection type: basic set
/ installation on bath rim
/ min. operating pressure: 1 bar
/ max. operating pressure: 10 bar
/ no additional maintenance opening required
/ spray type hand shower: Rain, MonoRain

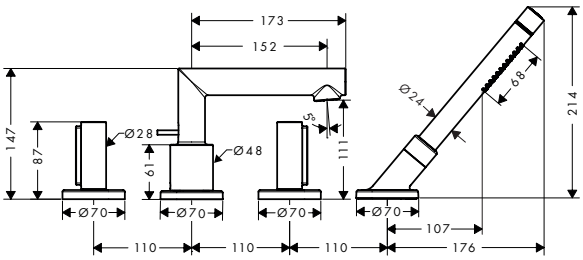

Technologies

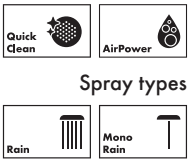

Spray types

Projection (mm)	Finish	Code no.
152	Chrome	45444000
	Brushed Black Chrome	45444340
	Brushed Nickel	45444820
	AXOR FinishPlus*	45444XXX

Required parts:		Code no.
	Basic set for 4-hole rim mounted bath mixer	15480180

Optional parts:		Code no.
	Secuflex insert extension	98806000

*AXOR FinishPlus: For further AXOR FinishPlus surfaces please see the AXOR FinishPlus overview on page 44.

Bath spouts floor-standing

Features of all variants

/ 1 function
/ connection type: basic set
/ projection: 226 mm
/ free-standing installation
/ maximum flow rate at 3 bar: 18 l/min
/ spray type: normal spray

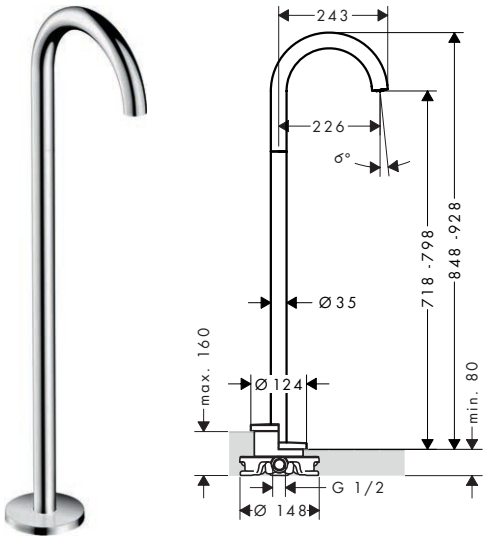

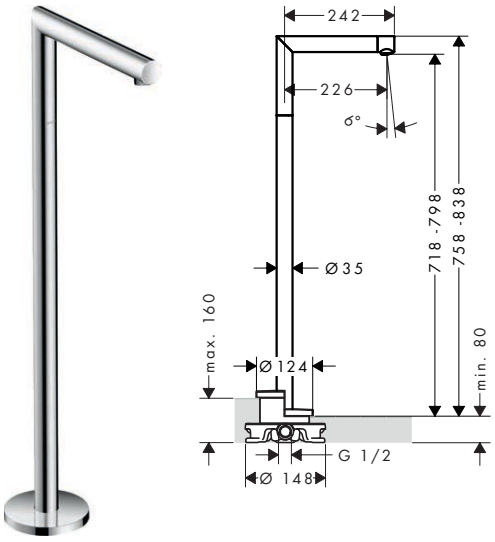

Technologies

Overview variants

Projection (mm)	Version	Finish	Code no.
226	curved	Chrome	38412000
		Brushed Black Chrome	38412340
		Matt Black	38412670
		Matt White	38412700
		Brushed Nickel	38412820
		AXOR FinishPlus*	38412XXX
226	straight	Chrome	45412000
		Brushed Black Chrome	45412340
		Brushed Nickel	45412820
		AXOR FinishPlus*	45412XXX

Required parts:		Code no.
	Basic set for mixers floor-standing	10452180

Optional parts:		Code no.
	Sealing foil for basic set bath mixer floor-standing	96441000

Measurements within scale drawings are in mm.
Technical specifications and units of measure are subject to change.

Bath spouts

Features of all variants

/ 1 function
/ with escutcheon
/ wall-mounted
/ maximum flow rate at 3 bar: 19 l/min
/ connection dimension: DN20
/ spray type: normal spray

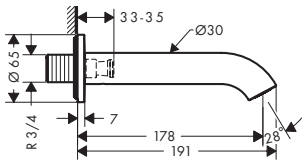

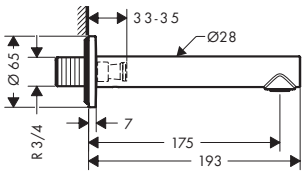

Technologies

Overview variants

Projection (mm)	Version	Finish	Code no.
178	curved	Chrome	38411000
		Brushed Black Chrome	38411340
		Matt Black	38411670
		Matt White	38411700
		Brushed Nickel	38411820
		AXOR FinishPlus*	38411XXX
175	straight	Chrome	45410000
		Brushed Black Chrome	45410340
		Brushed Nickel	45410820
		AXOR FinishPlus*	45410XXX

Single lever shower mixer for exposed installation with zero handle

Features of all variants

/ consists of: single lever shower mixer
/ 1 function
/ centre distance: 150 ± 16 mm
/ maximum flow rate at 3 bar: 15 l/min
/ ceramic cartridge
/ temperature limitation adjustable
/ non-return valve
/ with silencer
/ suitable for continous flow water heaters
/ hose connection: DN15
/ connection dimension: DN15
/ min. operating pressure: 1 bar
/ max. operating pressure: 10 bar
/ connection type: S-connections

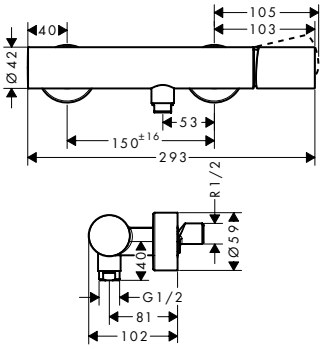

Handle version	Finish	Code no.
zero	Chrome	45600000
	Brushed Black Chrome	45600340
	Brushed Nickel	45600820
	AXOR FinishPlus*	45600XXX

*AXOR FinishPlus: For further AXOR FinishPlus surfaces please see the AXOR FinishPlus overview on page 44.

Single lever shower mixer for concealed installation with zero handle

Features of all variants

/ 1 function
/ maximum flow rate at 3 bar: 29 l/min
/ ceramic cartridge
/ temperature limitation adjustable
/ with silencer
/ suitable for continous flow water heaters
/ min. operating pressure: 1 bar
/ max. operating pressure: 10 bar
/ connection type: basic set

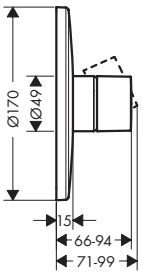

Handle version	Finish	Code no.
zero	Chrome	45605000
	Brushed Black Chrome	45605340
	Brushed Nickel	45605820
	AXOR FinishPlus*	45605XXX

Required parts (choose one):			Code no.
Option 1		AXOR iBox universal 2 Basic set	01400180
+		Adapter plate for iBox universal 2	13588000
Option 2		AXOR iBox universal Basic set	01700180

Bath thermostat for exposed installation

Features of all variants

/ projection 180 mm
/ 2 functions
/ thermostat cartridge, shut-off/ diverter valve
/ spray type spout: normal spray
/ maximum flow rate at 3 bar: 21 l/min
/ flow rate for bath spout at 3 bar: 21 l/min
/ flow rate of hand shower at 3 bar: 17 l/min
/ min. operating pressure: 1 bar
/ max. operating pressure: 10 bar
/ Safety stop at 40 °C
/ temperature limitation adjustable
/ non-return valve
/ with silencer
/ connection dimension: DN15
/ connection type: S-connections
/ centre distance: 150 ± 12 mm

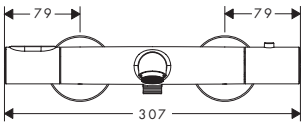

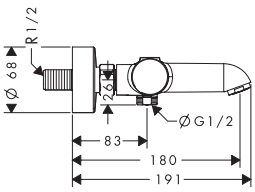

Special feature

Technologies

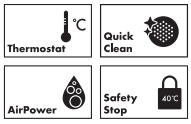

Centre distance (mm)	Finish	Code no.
150	Chrome	34435000
	AXOR FinishPlus*	34435XXX

Measurements within scale drawings are in mm.
Technical specifications and units of measure are subject to change.

Shower thermostat for exposed installation

Features of all variants

/ 1 function
/ thermostat cartridge, ceramic valve 180°
/ maximum flow rate at 3 bar: 20 l/min
/ min. operating pressure: 1 bar
/ max. operating pressure: 10 bar
/ Safety stop at 40 °C
/ temperature limitation adjustable
/ non-return valve
/ with silencer
/ centre distance: 150 ± 12 mm
/ connection dimension: DN15
/ connection type: S-connections

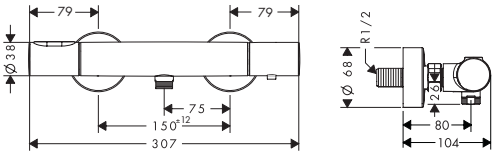

Special feature

Water Flow Control

Technologies

Thermostat
Safety Stop 40°C

Certificates/declarations

EPD

Centre distance (mm)	Finish	Code no.
150	Chrome	34635000
	AXOR FinishPlus*	34635XXX

Thermostat HighFlow for concealed installation

Features of all variants

/ 1 function
/ thermostat cartridge
/ flow rate upper outlet: 42 l/min
/ flow rate lower outlet: 42 l/min
/ maximum flow rate at 3 bar: 59 l/min
/ min. operating pressure: 1 bar
/ max. operating pressure: 10 bar
/ Safety stop at 40 °C
/ temperature limitation adjustable
/ with silencer
/ connection type: basic set

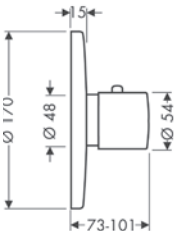

Technologies

Thermostat

Max. flow rate at 3 bar (l/min)	Finish	Code no.
59	Chrome	38715000
	Brushed Black Chrome	38715340
	Brushed Nickel	38715820
	AXOR FinishPlus*	38715XXX

Required parts (choose one):			Code no.
Option 1		AXOR iBox universal 2 Basic set	01400180
+		Adapter plate for iBox universal 2	13588000
Option 2		AXOR iBox universal Basic set	01700180

*AXOR FinishPlus: For further AXOR FinishPlus surfaces please see the AXOR FinishPlus overview on page 44.

Thermostat for concealed installation with shut-off valve

Features of all variants

/ 1 function
/ thermostat cartridge, ceramic valves 90°
/ maximum flow rate at 3 bar: 25 l/min
/ min. operating pressure: 1 bar
/ max. operating pressure: 10 bar
/ Safety stop at 40 °C
/ temperature limitation adjustable
/ non-return valve
/ with silencer
/ connection type: basic set

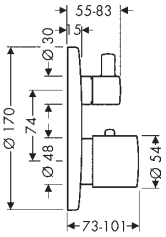

Special feature

Water Flow Control

Technologies

Thermostat, Safety Stop

Certificates/declarations

EPD

Max. flow rate at 3 bar (l/min)	Finish	Code no.
25	Chrome	38700000
	Brushed Black Chrome	38700340
	Brushed Nickel	38700820
	AXOR FinishPlus*	38700XXX

This product is only available in the AXOR FinishPlus surfaces Polished and Brushed Bronze via AXOR Signature.

Required parts (choose one):			Code no.
Option 1		AXOR iBox universal 2 Basic set	01400180
	+	Adapter plate for iBox universal 2	13588000
Option 2		AXOR iBox universal Basic set	01700180

Thermostat for concealed installation with shut-off/ diverter valve

Features of all variants

/ 2 functions
/ thermostat cartridge, shut-off valve
/ flow rate upper outlet: 25 l/min
/ flow rate lower outlet: 29 l/min
/ maximum flow rate at 3 bar: 29 l/min
/ min. operating pressure: 1 bar
/ max. operating pressure: 10 bar
/ Safety stop at 40 °C
/ temperature limitation adjustable
/ non-return valve
/ with silencer
/ connection type: basic set

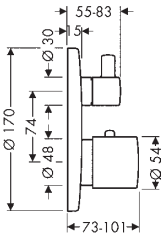

Special feature

Water Flow Control

Technologies

Thermostat, Safety Stop

Certificates/declarations

EPD

Max. flow rate at 3 bar (l/min)	Finish	Code no.
29	Chrome	38720000
	Brushed Black Chrome	38720340
	Brushed Nickel	38720820
	AXOR FinishPlus*	38720XXX

This product is only available in the AXOR FinishPlus surfaces Polished and Brushed Bronze via AXOR Signature.

Measurements within scale drawings are in mm.
Technical specifications and units of measure are subject to change.

Thermostat for concealed installation with shut-off/ diverter valve

Required parts (choose one):			Code no.
Option 1		AXOR iBox universal 2 Basic set	01400180
+		Adapter plate for iBox universal 2	13588000
Option 2		AXOR iBox universal Basic set	01700180

Shut-off valve for concealed installation

Features

/ connection type: DN15/DN20 / noise class: II

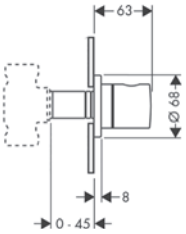

Finish	Code no.
Chrome	38976000
Brushed Black Chrome	38976340
Brushed Nickel	38976820
AXOR FinishPlus*	38976XXX

This product is only available in the AXOR FinishPlus surface Brushed Bronze via AXOR Signature.

Required parts (choose one):		Code no.
	Basic set 40 l/min for shut-off valve for concealed installation ceramic	16974180
	Basic set 52 l/min for shut-off valve for concealed installation spindle	16973180
	Basic set 130 l/min for shut-off valve for concealed installation spindle	16970180

Optional parts:		Code no.
	Extension set 25 mm for shut-off/ diverter valve Trio-/ Quattro	92990000

Shut-off/ diverter valve Trio/ Quattro for concealed installation

Features

/ connection dimension: DN20

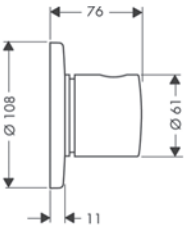

Finish	Code no.
Chrome	38933000
Brushed Black Chrome	38933340
Brushed Nickel	38933820
AXOR FinishPlus*	38933XXX

This product is only available in the AXOR FinishPlus surfaces Polished und Brushed Bronze via AXOR Signature.

Required parts (choose one):		Code no.
	Basic set for shut-off/ diverter valve Trio for concealed installation	16982180
	Basic set for Quattro four-way diverter valve for concealed installation	16930180

Optional parts:		Code no.
	Extension set 25 mm for shut-off/ diverter valve Trio-/ Quattro	92990000

*AXOR FinishPlus: For further AXOR FinishPlus surfaces please see the AXOR FinishPlus overview on page 44.

Possible product combinations

Showers

AXOR One
Overhead shower 280 2jet with shower arm

#48492XXX

page 135

AXOR ShowerSolutions
Overhead shower 300 2jet with ceiling connection

#35304XXX

page 428

Shower controls

AXOR ShowerSelect ID
Thermostat for concealed installation round for 2 functions

#36750XXX

page 519

AXOR One
Mixer for concealed installation for 2 functions

#48415XXX

page 129

Shower systems

AXOR One
Showerpipe with thermostat and overhead shower 280 1jet EcoSmart

#48795XXX

page 131

AXOR Starck
Shower column with thermostat and overhead shower 240 1jet

#12672XXX

page 498

AXOR ShowerSolutions
Showerpipe with thermostat 800 and overhead shower 350 1jet

#27984XXX

page 500

Further complementary products

AXOR Universal Circular
Bath towel rail 600 mm

#42860XXX

page 561

AXOR FlushPlate
Flush plate for Geberit Sigma

#42530XXX

page 581

AXOR Bidette Showers
Bidette hand shower 1jet round for cold water with shower holder and shower hose 1.25 m

#29240XXX

page 463

- Basin
- Bidet
- Bath
- Shower
- Thermostatic mixers / valves / diverters
- Overhead showers
- Hand showers
- Shower sets
- Showerpipe
- Complementary products

AXOR MONTREUX

DESIGN
–
PHOENIX

AXOR

"AXOR Montreux reinterprets the features of the early 20th century with great precision and workmanship, offering users the best in design and functionality."

ANDREAS HAUG, PHOENIX

AXOR Montreux

The tradition of industrial design

The AXOR Montreux mixer collection is modelled on the first industrially produced mixers from around the turn of the last century. The Belle Époque era symbolizes a time of fundamental change and technical progress. Immortalized in Europe's grand hotels and in Montreux, the legendary spa resort on the shores of Lake Geneva. AXOR Montreux combines outstanding technology with modern functionality.

Design: PHOENIX

Characteristic design feature:

Classic, authentic bathroom design:
AXOR Montreux is a modern reinterpretation of industrial design with couplings, valves and pipes. Additive design elements for a richly detailed look.

The designer's idea:

Authentic aesthetics: AXOR Montreux is an authentic, historical journey back in time to the heady days of industrialization. The collection combines the design of the first industrially manufactured mixers from the turn of the last century with outstanding technology and modern functionality, bringing the Belle Époque into the 21st century.

Special collection highlights:

/ Two handle variants: classic with cross handles, modern reinterpretation with lever handles
/ Various spout heights for wash basin mixers
/ The bridge mixer: A classic three-hole variant
/ Particular attention to detail: Porcelain inlays—with individualized inscriptions by request
/ Perfect for an overall classic atmosphere and for classic accents in a modern atmosphere
/ 2016: AXOR Montreux collection of 2006 expanded to include single lever mixer and lever handle variants

→ Learn more about AXOR Montreux: axor-design.com

Additive design in the tradition of the industrial age

AXOR Montreux pays homage to the Belle Époque. Along with wash basin mixers, it offers products for every bathroom area. The collection includes classic versions with low spouts and modern reinterpretations with high spouts. Choose from cross handles or lever handles.

Swivel spout

A high spout that swivels in a range of 120° for a modern look and maximum freedom of movement at the wash basin

Authentic Hot/Cold inscriptions

High quality porcelain plates inscribed with Hot/Cold labels. AXOR Signature offers personalization

Historical „bridge mixer"

A three-hole wash basin mixer that pays homage to the Belle Époque

Handle variants

Cross handles are the traditional version, modelled on early industrial design. Lever handles provide a modern contrast

Additive design

Characterized by the use of early industrial design elements such as couplings, valves and pipes

Waste set

With uncompromising traditional design

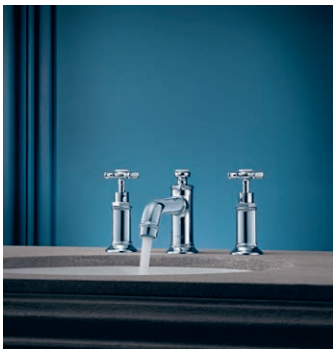

SHOWER
HOT
COLD

Classic design for the bathtub

The AXOR Montreux collection includes a broad spectrum of products for the bathtub to cover a variety of spatial requirements. From the two-handle bath mixer for exposed installation to the four-hole rim- or tile-mounted bath mixer, the products in the collection are available with either cross handles or lever handles. A real eye-catcher – the floor-standing bath mixer. In combination with a free-standing bathtub, it offers an extra degree of flexibility in bathroom design.

Authentic design
In the tradition of the Belle Époque

Hand shower 100 1jet (#16320000)
/ The scope of delivery includes the high-quality metal hand shower

Switching outlets
Pull the diverter to switch easily from bath spout to hand shower

Metal shower hose 1.25 m (# 28112000)
/ Included in scope of delivery

Single lever basin mixers

Features of all variants

/ consists of: single lever basin mixer, waste set
/ ComfortZone: 100
/ projection: 142 mm
/ spout height: 98 mm
/ handle variant: lever handle
/ spray type: normal spray
/ maximum flow rate at 3 bar: 5 l/min
/ ceramic cartridge
/ temperature limitation adjustable
/ suitable for continuous flow water heaters
/ connection type: G ⅜ hose connections
/ connection dimension: DN15
/ EU taxonomy: max. 6 l/min – Substantial Contribution (SC) possible

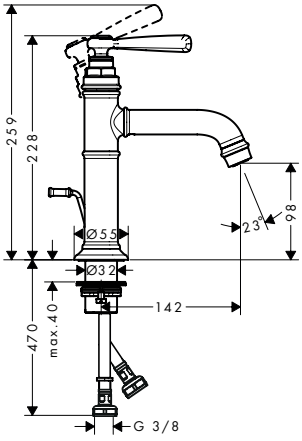

Special feature

Technologies

Certificates/declarations

Overview variants

ComfortZone	Projection (mm)	Spout height (mm)	Waste set	Finish	Code no.
100	142	98	pop-up	Chrome	16515000
				Brushed Black Chrome	16515340
				Brushed Nickel	16515820
				AXOR FinishPlus*	16515XXX
100	142	98	non-closing	Chrome	16516000
				Brushed Black Chrome	16516340
				Brushed Nickel	16516820
				AXOR FinishPlus*	16516XXX

Single lever basin mixers with swivel spout

Features of all variants

/ consists of: single lever basin mixer, waste set
/ ComfortZone: 210
/ projection: 175 mm
/ spout height: 209 mm
/ handle variant: lever handle
/ swivel range 120°
/ spray type: laminar spray
/ maximum flow rate at 3 bar: 5 l/min
/ ceramic cartridge
/ temperature limitation adjustable
/ suitable for continuous flow water heaters
/ connection type: G ⅜ hose connections
/ connection dimension: DN15
/ EU taxonomy: max. 6 l/min – Substantial Contribution (SC) possible

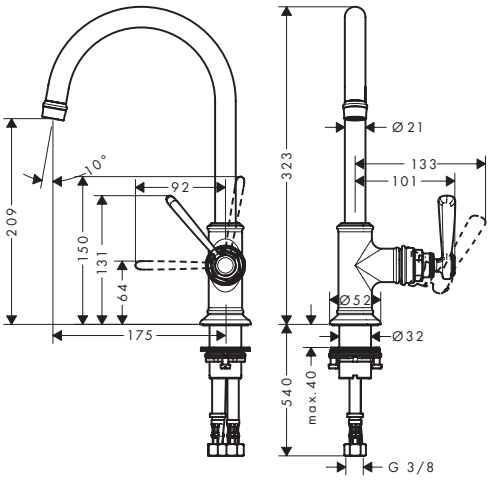

Special feature

Technologies

Measurements within scale drawings are in mm.
Technical specifications and units of measure are subject to change.

Single lever basin mixers with swivel spout

Overview variants

ComfortZone	Projection (mm)	Spout height (mm)	Waste set	Finish	Code no.
210	175	209	pop-up	Chrome	16517000
				Brushed Black Chrome	16517340
				Brushed Nickel	16517820
				AXOR FinishPlus*	16517XXX
210	175	209	non-closing	Chrome	16518000
				Brushed Black Chrome	16518340
				Brushed Nickel	16518820
				AXOR FinishPlus*	16518XXX

2-handle basin mixers

Features of all variants

/ consists of: 2-handle basin mixer, waste set
/ handle variant: cross handle
/ swivel range 120°
/ spray type: laminar spray
/ maximum flow rate at 3 bar: 5 l/min
/ ceramic valves hot/cold 90°
/ suitable for continuous flow water heaters
/ connection type: G ⅜ hose connections
/ connection dimension: DN15
/ EU taxonomy: max. 6 l/min – Substantial Contribution (SC) possible

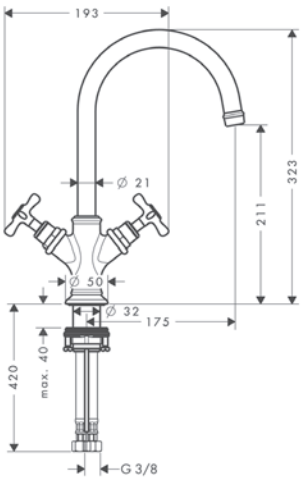

Special feature

Technologies

Certificates/declarations

Overview variants

ComfortZone	Projection (mm)	Spout height (mm)	Waste set	Finish	Code no.
160	117	159	pop-up	Chrome	16505000
				Brushed Black Chrome	16505340
				Brushed Nickel	16505820
				AXOR FinishPlus*	16505XXX
210	175	211	pop-up	Chrome	16502000
				Brushed Black Chrome	16502340
				Brushed Nickel	16502820
				AXOR FinishPlus*	16502XXX
210	175	211	non-closing	Chrome	16506000
				Brushed Black Chrome	16506340
				Brushed Nickel	16506820
				AXOR FinishPlus*	16506XXX

*AXOR FinishPlus: For further AXOR FinishPlus surfaces please see the AXOR FinishPlus overview on page 44.

Pillar tap 50 with lever handle without waste set

Features of all variants

/ ComfortZone: 50
/ projection: 104 mm
/ spout height: 52 mm
/ handle variant: cross handle
/ spray type: normal spray
/ maximum flow rate at 3 bar: 5 l/min
/ ceramic valves 90°
/ for cold water connection
/ connection type: G ⅜ hose connection
/ connection dimension: DN15
/ EU taxonomy: max. 6 l/min – Substantial Contribution (SC) possible

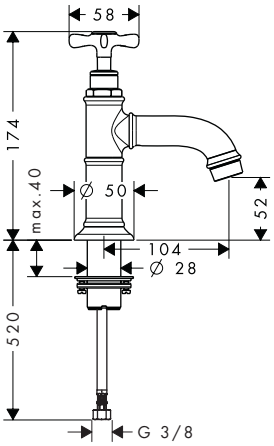

Special feature

EcoSmart

Technologies

AirPower

Comfort Zone

ComfortZone	Projection (mm)	Spout height (mm)	Waste set	Finish	Code no.
50	104	52	without	Chrome	16530000
				Brushed Black Chrome	16530340
				Brushed Nickel	16530820
				AXOR FinishPlus*	16530XXX

2-handle basin mixers

Features of all variants

/ consists of: 2-handle basin mixer, waste set
/ ComfortZone: 220
/ projection: 175 mm
/ spout height: 224 mm
/ swivel range 120°
/ maximum flow rate at 3 bar: 5 l/min
/ ceramic valves hot/cold 90°
/ suitable for continuous flow water heaters
/ pop-up waste set G 1¼
/ connection type: G ⅜ hose connections
/ connection dimension: DN15
/ EU taxonomy: max. 6 l/min – Substantial Contribution (SC) possible

lever handle

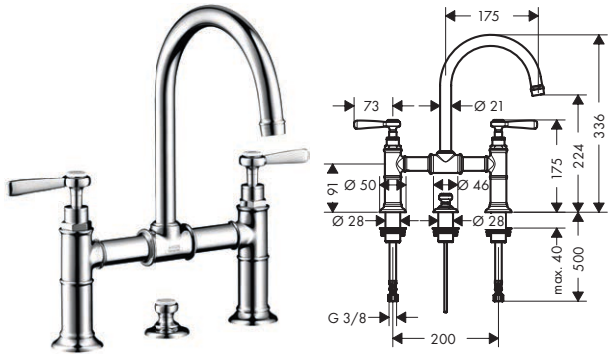

cross handle

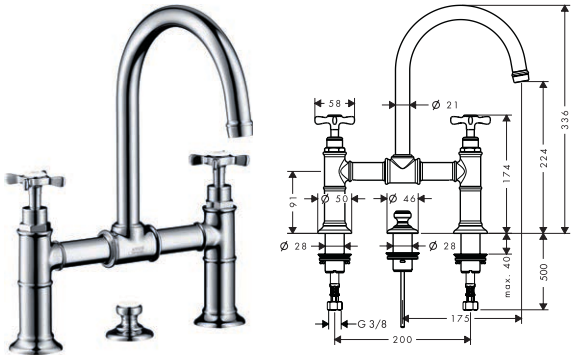

Special feature

EcoSmart

Technologies

AirPower

Comfort Zone

Overview variants

ComfortZone	Projection (mm)	Spout height (mm)	Handle version	Finish	Code no.
220	175	224	lever	Chrome	16511000
				Brushed Black Chrome	16511340
				Brushed Nickel	16511820
				AXOR FinishPlus*	16511XXX
220	175	224	cross	Chrome	16510000
				Brushed Black Chrome	16510340
				Brushed Nickel	16510820
				AXOR FinishPlus*	16510XXX

Measurements within scale drawings are in mm.
Technical specifications and units of measure are subject to change.

3-hole basin mixers

Features of all variants

/ consists of: 3-hole basin mixer, waste set
/ ComfortZone: 30
/ projection: 143 mm
/ spout height: 30 mm
/ spray type: normal spray
/ maximum flow rate at 3 bar: 5 l/min
/ ceramic valves hot/cold 90°
/ suitable for continuous flow water heaters
/ pop-up waste set G 1¼
/ connection type: G ⅜ hose connections
/ connection dimension: DN15
/ EU taxonomy: max. 6 l/min – Substantial Contribution (SC) possible

lever handle

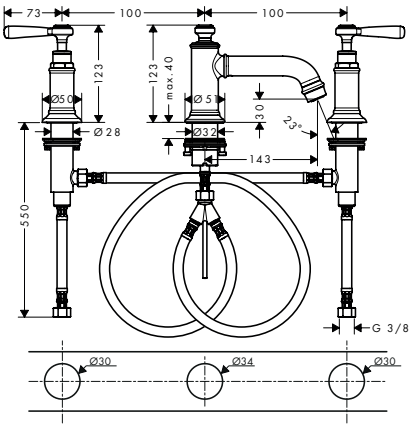

cross handle

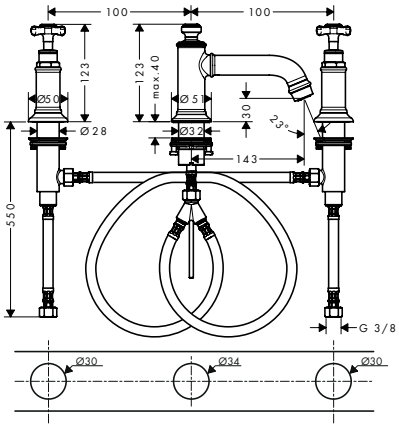

Special feature

EcoSmart

Technologies

AirPower

Comfort Zone

Overview variants

ComfortZone	Projection (mm)	Spout height (mm)	Handle version	Finish	Code no.
30	143	30	lever	Chrome	16535000
				Brushed Black Chrome	16535340
				Brushed Nickel	16535820
				AXOR FinishPlus*	16535XXX
30	143	30	cross	Chrome	16536000
				Brushed Black Chrome	16536340
				Brushed Nickel	16536820
				AXOR FinishPlus*	16536XXX

Optional parts:		Code no.
	Hose extension set for 3-hole basin mixer	38959000

*AXOR FinishPlus: For further AXOR FinishPlus surfaces please see the AXOR FinishPlus overview on page 44.

3-hole basin mixers

Features of all variants

/ consists of: 3-hole basin mixer, waste set
/ ComfortZone: 180
/ projection: 175 mm
/ spout height: 179 mm
/ swivel range 120°
/ spray type: laminar spray
/ maximum flow rate at 3 bar: 5 l/min
/ ceramic valves hot/cold 90°
/ suitable for continuous flow water heaters
/ pop-up waste set G 1¼
/ connection type: G ⅜ hose connections
/ connection dimension: DN15
/ EU taxonomy: max. 6 l/min – Substantial Contribution (SC) possible

lever handle

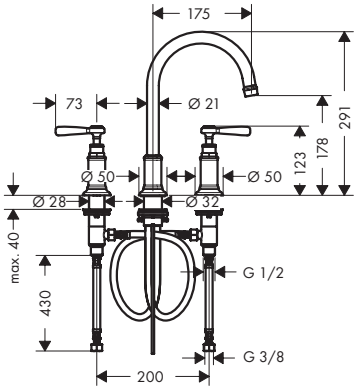

cross handle

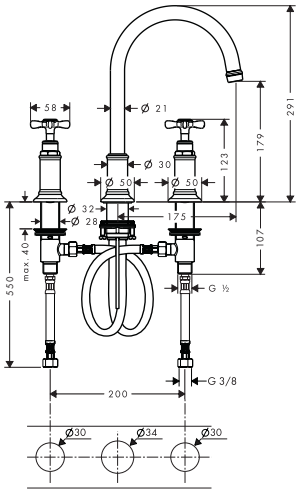

Special feature

Technologies

EcoSmart

Comfort Zone

Overview variants

ComfortZone	Projection (mm)	Spout height (mm)	Handle version	Finish	Code no.
180	175	179	lever	Chrome	16514000
				Brushed Black Chrome	16514340
				Brushed Nickel	16514820
				AXOR FinishPlus*	16514XXX
180	175	179	cross	Chrome	16513000
				Brushed Black Chrome	16513340
				Brushed Nickel	16513820
				AXOR FinishPlus*	16513XXX

Optional parts:		Code no.
	Hose extension set for 3-hole basin mixer	38959000

3-hole basin mixers wall mounted

Features of all variants

/ consists of: 3-hole basin mixer for concealed installation wall-mounted, waste set
/ projection: 225 mm
/ spray type: normal spray
/ maximum flow rate at 3 bar: 5 l/min
/ ceramic valves hot/cold 90°
/ suitable for continuous flow water heaters
/ non-closing waste set
/ connection type: basic set
/ connection dimension: DN15
/ EU taxonomy: max. 6 l/min – Substantial Contribution (SC) possible

lever handle

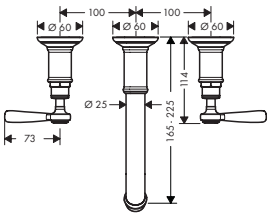

cross handle

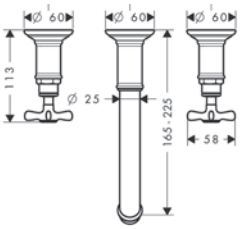

Special feature

Technologies

EcoSmart

Quick Clean

AirPower

Measurements within scale drawings are in mm.
Technical specifications and units of measure are subject to change.

3-hole basin mixers wall mounted

Overview variants

Projection (mm)	Handle version	Finish	Code no.
225	lever	Chrome	16534000
		Brushed Black Chrome	16534340
		Brushed Nickel	16534820
		AXOR FinishPlus*	16534XXX
225	cross	Chrome	16532000
		Brushed Black Chrome	16532340
		Brushed Nickel	16532820
		AXOR FinishPlus*	16532XXX

Required parts:		Code no.
	Basic set for 3-hole basin mixer for concealed installation wall-mounted	10303180

Optional parts:		Code no.
	Seal	96383000
	AXOR Starck Extension set 25 mm for basic set for 3-hole basin mixer wall-mounted	96259000

Single lever bidet mixer with lever handle and pop-up waste set

Features of all variants

/ consists of: single lever bidet mixer, waste set
/ projection: 110 mm
/ spout height: 140 mm
/ aerator with ball pivot
/ spray type: normal spray
/ maximum flow rate at 3 bar: 5 l/min
/ ceramic cartridge
/ suitable for continous flow water heaters
/ pop-up waste set G 1¼
/ connection type: G ⅜ hose connections
/ EU taxonomy: max. 6 l/min – Substantial Contribution (SC) possible

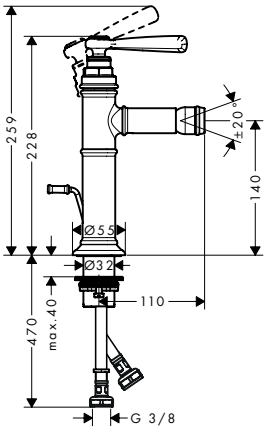

Special feature

EcoSmart

Technologies

Quick Clean
AirPower

Projection (mm)	Spout height (mm)	Finish	Code no.
110	140	Chrome	16526000
		Brushed Black Chrome	16526340
		Brushed Nickel	16526820
		AXOR FinishPlus*	16526XXX

*AXOR FinishPlus: For further AXOR FinishPlus surfaces please see the AXOR FinishPlus overview on page 44.

2-handle bidet mixer with cross handles and pop-up waste set

Features

/ consists of: 2-handle bidet mixer, waste set
/ projection: 104 mm
/ spout height: 158 mm
/ ball-pivot joint
/ spray type: laminar spray
/ maximum flow rate at 3 bar: 7,5 l/min
/ ceramic valves hot/ cold 180°
/ suitable for continous flow water heaters
/ pop-up waste set G 1¼
/ connection type: G ⅜ hose connections

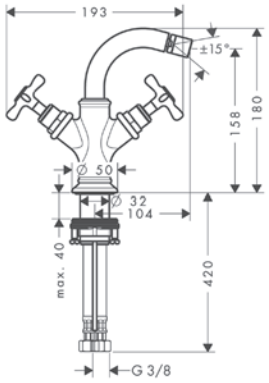

Finish	Code no.
Chrome	16520000
Brushed Black Chrome	16520340
Brushed Nickel	16520820
AXOR FinishPlus*	16520XXX

2-handle bath mixers for exposed installation

Features of all variants

/ consists of: 2-handle bath mixer, hand shower, shower holder, shower hose
/ 2 functions
/ projection: 224 mm
/ centre distance: 170 ± 32 mm
/ spray type mixer: normal spray
/ maximum flow rate at 3 bar: 20 l/min
/ flow rate for bath spout at 3 bar: 20 l/min
/ flow rate of hand shower at 3 bar: 14 l/min
/ ceramic valves hot/cold 90°
/ non-return valve
/ suitable for continous flow water heaters
/ connection dimension: DN15
/ connection type: S-connections
/ wall-mounted
/ min. operating pressure: 1 bar
/ max. operating pressure: 10 bar
/ spray type hand shower: RainAir

lever handle

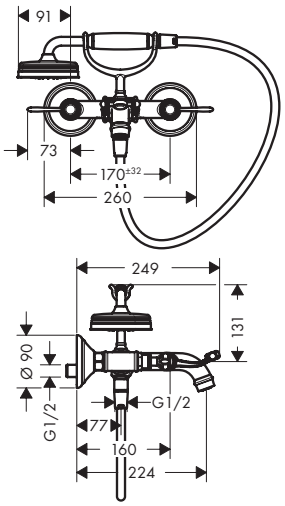

cross handle

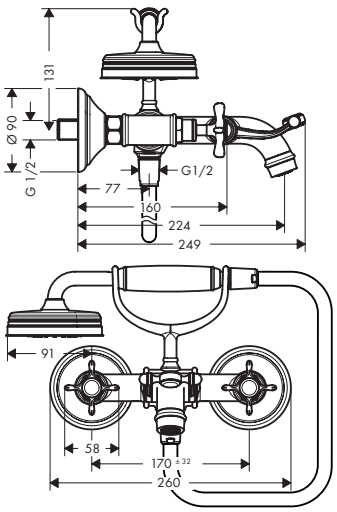

Technologies

Quick clean
AirPower

Spray types

RainAir

Overview variants

Projection (mm)	Handle version	Finish	Code no.
224	lever	Chrome	16551000
		Brushed Black Chrome	16551340
		Brushed Nickel	16551820
		AXOR FinishPlus*	16551XXX
224	cross	Chrome	16540000
		Brushed Black Chrome	16540340
		Brushed Nickel	16540820
		AXOR FinishPlus*	16540XXX

Measurements within scale drawings are in mm.
Technical specifications and units of measure are subject to change.

2-handle bath mixers floor-standing

Features of all variants

/ consists of: 2-handle bath mixer floor standing, hand shower, shower hose, shower holder
/ 2 functions
/ projection: 234 mm
/ spray type mixer: normal spray
/ non-return valve
/ suitable for continous flow water heaters
/ connection dimension: DN15
/ connection type: basic set
/ deck mounted
/ min. operating pressure: 1 bar
/ max. operating pressure: 10 bar
/ spray type hand shower: RainAir

lever handle

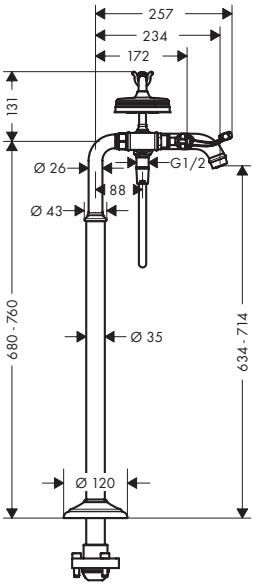

cross handle

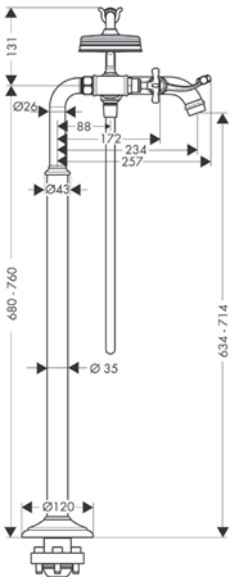

Technologies

Spray types

Overview variants

Projection (mm)	Handle version	Finish	Code no.
234	lever	Chrome	16553000
		Brushed Black Chrome	16553340
		Brushed Nickel	16553820
		AXOR FinishPlus*	16553XXX
234	cross	Chrome	16547000
		Brushed Black Chrome	16547340
		Brushed Nickel	16547820

Required parts:		Code no.
	AXOR Montreux Basic set for 2-handle bath mixer floor-standing	16549180

Optional parts:		Code no.
	Sealing foil for basic set bath mixer floor-standing	96441000

*AXOR FinishPlus: For further AXOR FinishPlus surfaces please see the AXOR FinishPlus overview on page 44.

Bath spout

Features of all variants

/ 1 function
/ connection type: G ¾
/ projection: 220 mm
/ maximum flow rate at 3 bar: 20 l/min
/ spray type: normal spray

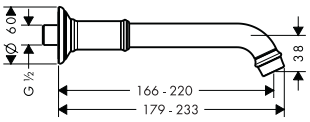

Technologies

Projection (mm)	Finish	Code no.
220	Chrome	16541000
	Brushed Black Chrome	16541340
	Brushed Nickel	16541820
	AXOR FinishPlus*	16541XXX

4-hole rim mounted bath mixers

Features of all variants

/ consists of: 4-hole rim mounted bath mixer, hand shower, shower hose, shower holder
/ 2 functions
/ projection: 196 mm
/ spray type mixer: normal spray
/ maximum pull-out length of hand shower: 1.10 m
/ maximum flow rate at 3 bar: 20,5 l/min
/ flow rate for bath spout at 3 bar: 20,5 l/min
/ flow rate of hand shower at 3 bar: 15 l/min
/ non-return valve
/ connection dimension: DN15
/ connection type: basic set
/ installation on bath rim
/ min. operating pressure: 1 bar
/ max. operating pressure: 10 bar
/ spray type hand shower: RainAir

lever handle

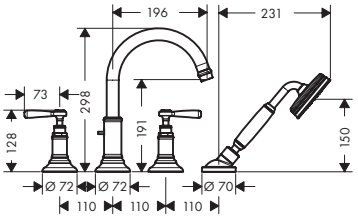

cross handle

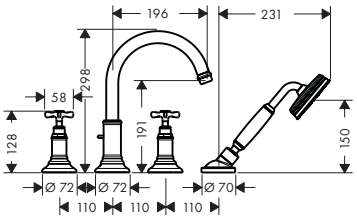

Technologies

Spray types

Overview variants

Projection (mm)	Handle version	Finish	Code no.
196	lever	Chrome	16550000
		Brushed Black Chrome	16550340
		Brushed Nickel	16550820
		AXOR FinishPlus*	16550XXX
196	cross	Chrome	16546000
		Brushed Black Chrome	16546340
		Brushed Nickel	16546820
		AXOR FinishPlus*	16546XXX

Measurements within scale drawings are in mm.
Technical specifications and units of measure are subject to change.

4-hole rim mounted bath mixers

Required parts:	Code no.
Basic set for 4-hole rim mounted bath mixer	15480180

Optional parts:	Code no.
Secuflex insert extension	98806000

4-hole tile mounted bath mixers

Features of all variants

/ 2 functions
/ projection: 196 mm
/ spray type mixer: normal spray
/ maximum pull-out length of hand shower: 1.10 m
/ maximum flow rate at 3 bar: 21 l/min
/ flow rate for bath spout at 3 bar: 21 l/min
/ flow rate of hand shower at 3 bar: 15 l/min
/ non-return valve
/ connection dimension: DN15
/ connection type: basic set
/ tile mounted
/ min. operating pressure: 1 bar
/ max. operating pressure: 10 bar
/ spray type hand shower: RainAir

lever handle

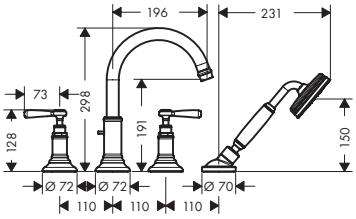

cross handle

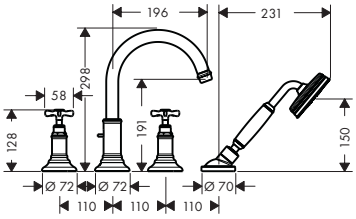

Technologies

Quick Clean
AirPower

Spray types

RainAir

Overview variants

Projection (mm)	Handle version	Finish	Code no.
196	lever	Chrome	16554000
		Brushed Black Chrome	16554340
		Brushed Nickel	16554820
		AXOR FinishPlus*	16554XXX
196	cross	Chrome	16544000
		Brushed Black Chrome	16544340
		Brushed Nickel	16544820
		AXOR FinishPlus*	16544XXX

Required parts:	Code no.
Basic set for 4-hole tile mounted bath mixer	15481180

Optional parts:	Code no.
Secuflex insert extension	98806000

*AXOR FinishPlus: For further AXOR FinishPlus surfaces please see the AXOR FinishPlus overview on page 44.

2-handle shower mixer for exposed installation with cross handles

Features

/ 1 function
/ centre distance: 170 ± 32 mm
/ maximum flow rate at 3 bar: 11 l/min
/ ceramic valves hot/ cold 180°
/ non-return valve
/ suitable for continous flow water heaters
/ hose connection: DN15
/ connection dimension: DN15
/ min. operating pressure: 1 bar
/ max. operating pressure: 10 bar
/ connection type: S-connections

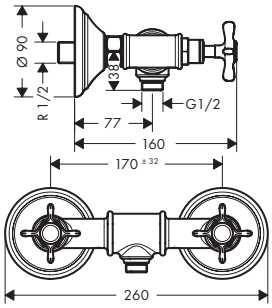

Finish	Code no.
Chrome	16560000
Brushed Black Chrome	16560340
Brushed Nickel	16560820
AXOR FinishPlus*	16560XXX

Shower holder

Features

/ fixed holding position
/ for shower hoses with conical nut
/ material: metal
/ dimensions: 68 x 68 x 84 mm (HxWxD)
/ diameter drill hole: 6 mm
/ 2 drill holes
/ conical mount

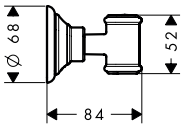

Finish	Code no.
Chrome	16325000
Brushed Black Chrome	16325340
Brushed Nickel	16325820
AXOR FinishPlus*	16325XXX

Wall outlet with non-return valve

Features

/ metal connection angle
/ connection type: G ½
/ non-return valve

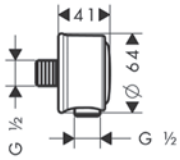

Finish	Code no.
Chrome	16884000
Brushed Black Chrome	16884340
Brushed Nickel	16884820
AXOR FinishPlus*	16884XXX

Measurements within scale drawings are in mm.
Technical specifications and units of measure are subject to change.

Wall outlets with non-return valve

Features of all variants

/ connection type: DN15
/ hose connection DN15
/ with non-return valve

lever handle

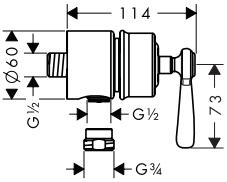

cross handle

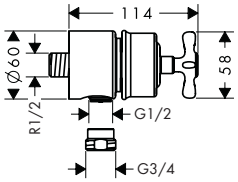

Overview variants

Handle version	Finish	Code no.
lever	Chrome	16883000
	Brushed Black Chrome	16883340
	Brushed Nickel	16883820
	AXOR FinishPlus*	16883XXX
cross	Chrome	16882000
	Brushed Black Chrome	16882340
	Brushed Nickel	16882820
	AXOR FinishPlus*	16882XXX

Shower thermostat for exposed installation with cross handle

Features of all variants

/ 1 function
/ thermostat cartridge, ceramic valve 180°
/ maximum flow rate at 3 bar: 16 l/min
/ min. operating pressure: 1 bar
/ max. operating pressure: 10 bar
/ Safety stop at 40 °C
/ temperature limitation adjustable
/ non-return valve
/ with silencer
/ centre distance: 150 ± 12 mm
/ connection dimension: DN15
/ connection type: S-connections

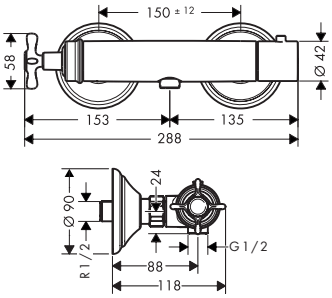

Special feature

Technologies

Max. flow rate at 3 bar (l/min)	Finish	Code no.
16	Chrome	16261000
	Brushed Black Chrome	16261340
	Brushed Nickel	16261820
	AXOR FinishPlus*	16261XXX

*AXOR FinishPlus: For further AXOR FinishPlus surfaces please see the AXOR FinishPlus overview on page 44.

Thermostats HighFlow for concealed installation

Features of all variants

/ 1 function
/ thermostat cartridge
/ flow rate upper outlet: 42 l/min
/ flow rate lower outlet: 42 l/min
/ maximum flow rate at 3 bar: 59 l/min
/ min. operating pressure: 1 bar
/ max. operating pressure: 10 bar
/ Safety stop at 40 °C
/ temperature limitation adjustable
/ non-return valve
/ with silencer
/ connection type: basic set

lever handle

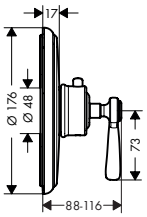

cross handle

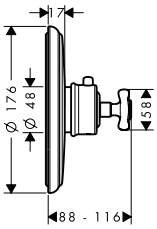

Technologies

Overview variants

	Handle version	Finish	Code no.
	lever	Chrome	16824000
		Brushed Black Chrome	16824340
		Brushed Nickel	16824820
		AXOR FinishPlus*	16824XXX
	cross	Chrome	16815000
		Brushed Black Chrome	16815340
		Brushed Nickel	16815820
		AXOR FinishPlus*	16815XXX

Required parts (choose one):			Code no.
Option 1		AXOR iBox universal 2 Basic set	01400180
+		Adapter plate for iBox universal 2	13588000
Option 2		AXOR iBox universal Basic set	01700180

Measurements within scale drawings are in mm.
Technical specifications and units of measure are subject to change.

Shower thermostats for concealed installation

Features of all variants

/ 1 function
/ thermostat cartridge
/ maximum flow rate at 3 bar: 43 l/min
/ min. operating pressure: 1 bar
/ max. operating pressure: 10 bar
/ Safety stop at 40 °C
/ temperature limitation adjustable
/ connection type: basic set

lever handle

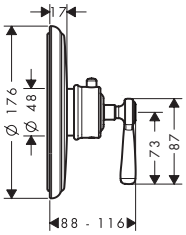

cross handle

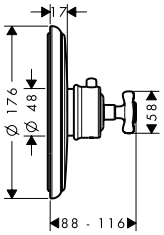

Technologies

Overview variants

Handle version	Finish	Code no.
lever	Chrome	16823000
	Brushed Black Chrome	16823340
	Brushed Nickel	16823820
	AXOR FinishPlus*	16823XXX
cross	Chrome	16810000
	Brushed Black Chrome	16810340
	Brushed Nickel	16810820
	AXOR FinishPlus*	16810XXX

Required parts (choose one):			Code no.
Option 1		AXOR iBox universal 2 Basic set	01400180
+		Adapter plate for iBox universal 2	13588000
Option 2		AXOR iBox universal Basic set	01700180

*AXOR FinishPlus: For further AXOR FinishPlus surfaces please see the AXOR FinishPlus overview on page 44.

Thermostats for concealed installation with shut-off valve

Features of all variants

/ 1 function
/ thermostat cartridge, ceramic valves 90°
/ maximum flow rate at 3 bar: 25 l/min
/ min. operating pressure: 1 bar
/ max. operating pressure: 10 bar
/ Safety stop at 40 °C
/ temperature limitation adjustable
/ non-return valve
/ with silencer
/ connection type: basic set

lever handle

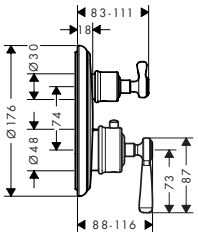

cross handle

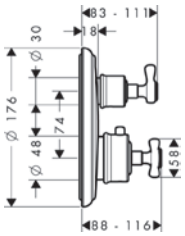

Special feature

Water Flow Control

Technologies

Thermostat

Safety Stop 40°C

Overview variants

	Handle version	Finish	Code no.
	lever	Chrome	16801000
		Brushed Black Chrome	16801340
		Brushed Nickel	16801820
		AXOR FinishPlus*	16801XXX
	cross	Chrome	16800000
		Brushed Black Chrome	16800340
		Brushed Nickel	16800820
		AXOR FinishPlus*	16800XXX

Required parts (choose one):			Code no.
Option 1		AXOR iBox universal 2 Basic set	01400180
+		Adapter plate for iBox universal 2	13588000
Option 2		AXOR iBox universal Basic set	01700180

Measurements within scale drawings are in mm.
Technical specifications and units of measure are subject to change.

Thermostats for concealed installation with shut-off and diverter valve

Features of all variants

/ 2 functions
/ thermostat cartridge, shut-off valve
/ flow rate upper outlet: 25 l/min
/ flow rate lower outlet: 29 l/min
/ maximum flow rate at 3 bar: 29 l/min
/ min. operating pressure: 1 bar
/ max. operating pressure: 10 bar
/ Safety stop at 40 °C
/ temperature limitation adjustable
/ non-return valve
/ with silencer
/ connection type: basic set

lever handle

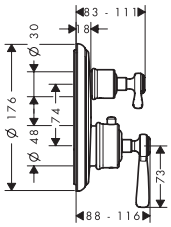

cross handle

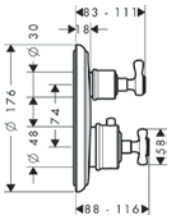

Special feature

Water Flow Control

Technologies

Thermostat, Safety Stop 40°C

Certificates/declarations

EPD

Overview variants

	Handle version	Finish	Code no.
	lever	Chrome	16821000
		Brushed Black Chrome	16821340
		Brushed Nickel	16821820
		AXOR FinishPlus*	16821XXX
	cross	Chrome	16820000
		Brushed Black Chrome	16820340
		Brushed Nickel	16820820
		AXOR FinishPlus*	16820XXX

Required parts (choose one):			Code no.
Option 1		AXOR iBox universal 2 Basic set	01400180
+		Adapter plate for iBox universal 2	13588000
Option 2		AXOR iBox universal Basic set	01700180

Shut-off valves for concealed installation

Features of all variants

/ connection type: DN15/DN20
/ noise class: II

lever handle

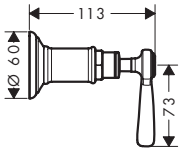

cross handle

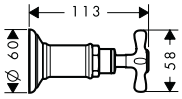

For more information about this product, please see the next page.

*AXOR FinishPlus: For further AXOR FinishPlus surfaces please see the AXOR FinishPlus overview on page 44.

Shut-off valves for concealed installation

Overview variants

Handle version	Finish	Code no.
lever	Chrome	16872000
	Brushed Black Chrome	16872340
	Brushed Nickel	16872820
	AXOR FinishPlus*	16872XXX
cross	Chrome	16871000
	Brushed Black Chrome	16871340
	Brushed Nickel	16871820
	AXOR FinishPlus*	16871XXX

Required parts:		Code no.
	Basic set 130 l/min for shut-off valve for concealed installation spindle	16970180
	Basic set 40 l/min for shut-off valve for concealed installation ceramic	16974180
	Basic set 52 l/min for shut-off valve for concealed installation spindle	16973180

Optional parts:		Code no.
	Extension set 25 mm for shut-off/ diverter valve Trio-/ Quattro	92990000

Shut-off/ diverter valve Trio/ Quattro for concealed installation with cross handle

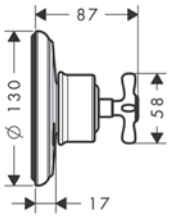

Finish	Code no.
Chrome	16830000
Brushed Black Chrome	16830340
Brushed Nickel	16830820
AXOR FinishPlus*	16830XXX

Required parts:		Code no.
	Basic set for Quattro four-way diverter valve for concealed installation	16930180
	Basic set for shut-off/ diverter valve Trio for concealed installation	16982180

Optional parts:		Code no.
	Extension set 25 mm for shut-off/ diverter valve Trio-/ Quattro	92990000

Measurements within scale drawings are in mm.
Technical specifications and units of measure are subject to change.

Overhead showers 1jet

Features of all variants

/ spray type: RainAir
/ minimum flow pressure: 1,5 bar
/ overhead shower angle adjustable
/ material spray disc: metal
/ spray disc removable for cleaning
/ installation: ceiling or wall
/ connection thread: G ½
/ connection dimension: DN15
/ suitable for continous flow water heaters

240

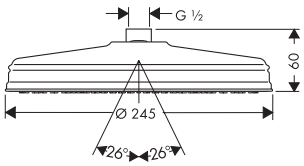

180

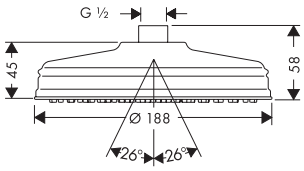

Technologies

AirPower
Quick Clean

Spray types

RainAir

Certificates/declarations

EPD

Overview variants

Shower head size	Number of sprays	Spray types	Function from (l/min)	Max. flow rate at 3 bar (l/min)	Min. flow pressure (bar)	Finish	Code no.
240	1	RainAir	11.5	17	1.5	Chrome	28474000
						Brushed Black Chrome	28474340
						Brushed Nickel	28474820
						AXOR FinishPlus*	28474XXX
180	1	RainAir	10.5	18	1.5	Chrome	28487000
						Brushed Black Chrome	28487340
						Brushed Nickel	28487820
						AXOR FinishPlus*	28487XXX

Optional parts:		Finish	Code no.
	AXOR Montreux Shower arm 389 mm	Chrome	27348000
		Brushed Black Chrome	27348340
		Brushed Nickel	27348820
		AXOR FinishPlus*	27348XXX
	AXOR ShowerSolutions Ceiling connector 100 mm	Chrome	26432000
		Brushed Black Chrome	26432340
		Brushed Nickel	26432820
		AXOR FinishPlus*	26432XXX
	AXOR ShowerSolutions Ceiling connector 300 mm	Chrome	26433000
		Brushed Black Chrome	26433340
		Brushed Nickel	26433820
		AXOR FinishPlus*	26433XXX

*AXOR FinishPlus: For further AXOR FinishPlus surfaces please see the AXOR FinishPlus overview on page 44.

Hand shower 100 1jet

Features of all variants

/ shower head size: 100 mm
/ spray type: RainAir
/ spray disc surface: grey
/ QuickClean: Limescale deposits can simply be rubbed off with your finger
/ maximum flow rate at 3 bar: 16 l/min
/ function from: 7,3 l/min
/ minimum flow pressure: 0,9 bar
/ rinseable filter washer
/ connection thread: G ½
/ suitable for continous flow water heaters

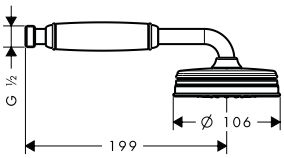

Technologies

Spray types

Shower head size	Number of sprays	Spray types	Function from (l/min)	Max. flow rate at 3 bar (l/min)	Min. flow pressure (bar)	Finish	Code no.
100	1	RainAir	7.3	16	0.9	Chrome	16320000
						Brushed Black Chrome	16320340
						Brushed Nickel	16320820
						AXOR FinishPlus*	16320XXX

Shower set 0.90 m with hand shower 100 1jet

Features of all variants

/ consists of: hand shower, shower bar, shower hose, slider
/ shower head size: 100 mm
/ spray type: RainAir
/ QuickClean: Limescale deposits can simply be rubbed off with your finger
/ maximum flow rate at 3 bar: 16 l/min
/ minimum flow pressure: 0,9 bar
/ operating pressure: min. 1 bar/max. 6 bar
/ support for shower hose with conical nuts
/ wall supports of metal
/ wall bar type: AXOR Montreux wall bar 0.90 m
/ profile pipe: round
/ shower bar diameter: 22 mm
/ drilling distance: 800 mm

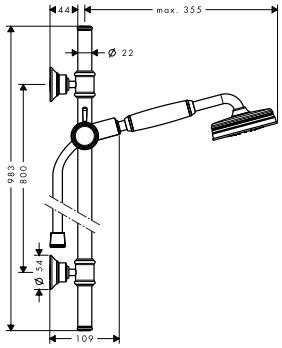

Technologies

Spray types

Drilling distance (mm)	Shower head size	Spray types	Function from (l/min)	Max. flow rate at 3 bar (l/min)	Min. flow pressure (bar)	Finish	Code no.
800	100	RainAir	7.3	16	0.9	Chrome	27982000
						Brushed Black Chrome	27982340
						Brushed Nickel	27982820
						AXOR FinishPlus*	27982XXX

Optional parts:		Finish	Code no.
	AXOR Montreux Corner basket 160/83	Chrome	42066000
		Brushed Black Chrome	42066340
		Brushed Nickel	42066820
		AXOR FinishPlus*	42066XXX

Measurements within scale drawings are in mm.
Technical specifications and units of measure are subject to change.

Showerpipe with thermostat and overhead shower 240 1jet

Features of all variants

/ consists of: overhead shower, hand shower, shower thermostat, shower hose, slider, shower bar
/ shower head size overhead shower: 240 mm
/ spray type overhead shower: RainAir
/ flow rate RainAir spray at 3 bar: 14 l/min
/ spray type hand shower: RainAir
/ flow rate of hand shower at 3 bar: 13,3 l/min
/ maximum flow rate for Showerpipe at 3 bar: 22,4 l/min
/ minimum flow pressure: 1 bar
/ max. operating pressure: 10 bar
/ height-adjustable slider
/ shower arm length overhead shower: 450 mm
/ swivelling shower arm
/ thermostat AXOR Montreux
/ SafetyStop at 40°C
/ adjustable hot water limitation
/ outlets controlled via turning handle
/ mounting type: exposed installation
/ connection dimension: DN15
/ connection thread: G ½
/ centre distance: 170 ± 32 mm
/ intrinsically safe against backflow
/ shower bar diameter: 22 mm
/ 2 functions

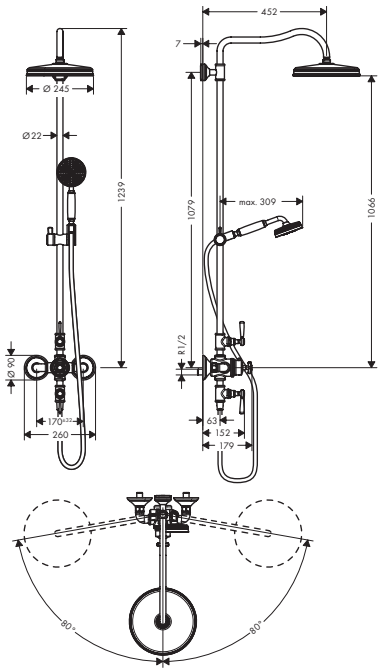

Technologies

AirPower
Quick Clean

Spray types

RainAir

Certificates/declarations

EPD

Shower head size	Spray types	Function from (l/min)	Max. flow rate at 3 bar (l/min)	Min. flow pressure (bar)	Thermostat	Finish	Code no.
240	RainAir	8.5	22.4	1	AXOR Montreux	Chrome	16572000
						Brushed Black Chrome	16572340
						Brushed Nickel	16572820
						AXOR FinishPlus*	16572XXX

*AXOR FinishPlus: For further AXOR FinishPlus surfaces please see the AXOR FinishPlus overview on page 44.

Possible product combinations

Shower controls

AXOR ShowerSelect ID
Thermostat for concealed installation round for 2 functions

#36750XXX

page 519

Further complementary products

AXOR Montreux
Bath towel rail 600 mm

#42060XXX

page 577

AXOR Suite Basins & Bathtub
Wash bowl 400 without tap hole and overflow

#42001XXX

page 602

AXOR Drain
Finish set shower drain 700

#42520XXX

page 632

AXOR FlushPlate
Flush plate for Geberit Sigma

#42530XXX

page 581

AXOR Bidette Showers
Bidette hand shower 1jet round for cold water with shower holder and shower hose 1.25 m

#29240XXX

page 463

Programs

AXOR ShowerComposition 390

AXOR Showers 402

AXOR Shower systems 482

AXOR Shower controls 506

AXOR Accessories 536

AXOR Electronic faucets 582

AXOR Wash basins and bathtubs 592

AXOR Kitchen faucets 606

AXOR Drain, wastes and overflows 628

AXOR Basic sets 646

Overhead showers

Shower panel

Shoulder shower

Thermostats

AXOR SHOWERCOMPOSITION

„With the new AXOR Shower-Composition shower program, we have composed three to four objects in one.“

PHILIPPE STARCK

AXOR ShowerComposition

Reflecting uniqueness – making an architectural statement

A shower is a very intimate space, and it must be flexible and adaptable to an individual's needs. Designed by world-renowned creator Philippe Starck, AXOR ShowerComposition introduces a striking new universal design language, modern and timeless, to the shower area.

Design: Philippe Starck

Characteristic design feature:

Reduced, rectilinear design with flat, elegant surfaces and ultra-slim profiles.

The designer's idea:

The AXOR ShowerComposition program combines three to four objects in one.

Special program highlights:

/ The all-in-one shower panel integrates an overhead shower, a body shower, a thermostatic module, and a hand shower

/ Individual shower modules can be composed and arranged for a truly personalized shower experience

/ PowderRain cocoons the body in ultra-fine droplets

/ The AXOR textile shower hose brings more coziness and comfort to the bathroom

→ Learn more about AXOR ShowerComposition: axor-design.com

Innovation meets design

The program features sleek, flat surfaces and ultra-slim profiles in an architectonic composition that presents novel possibilities for individual expression. Whether as an all-in-one shower panel or a personalized arrangement of floating modules, AXOR ShowerComposition offers exceptional performance, including immersive PowderRain spray mode overhead and PowderRain shoulder showers with angle adjustment. AXOR ShowerComposition provides the maximum of services by using the minimum of matter.

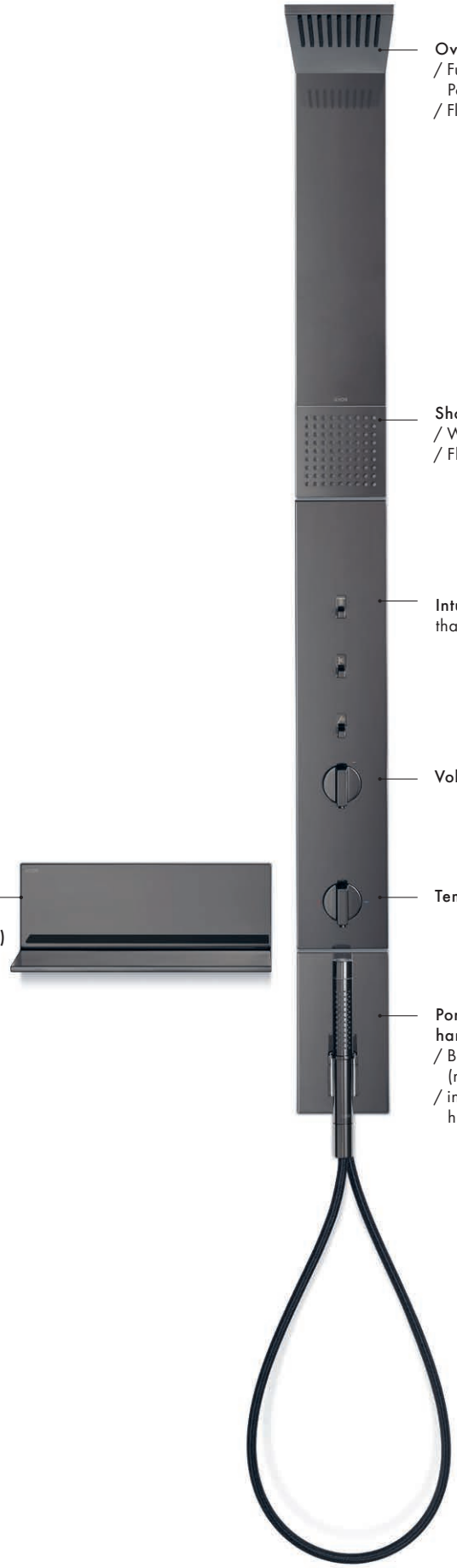

AXOR ShowerComposition features a reduced, rectilinear design, the diminutive depth of the showerhead and vertical panels (which extend just 10mm from the wall) counterbalanced by their generous width. Versatile and easy to install, the AXOR ShowerComposition program is available in a variety of configurations and in the full range of exclusive AXOR FinishPlus surfaces, including Matt Black.

Overhead shower module 110/220 1jet

Features of all variants

/ shower head size: 110 x 220 mm
/ spray type: PowderRain
/ flow rate PowderRain spray at 3 bar: 11,2 l/min
/ function from: 8,5 l/min
/ maximum flow rate at 3 bar: 11,2 l/min
/ minimum flow pressure: 1,7 bar
/ projection: 425 mm
/ material spray disc: metal
/ shower arm length: 324 mm
/ installation: wall
/ mounting type: concealed
/ connection dimension: DN15
/ connection type: basic set
/ suitable for continous flow water heaters

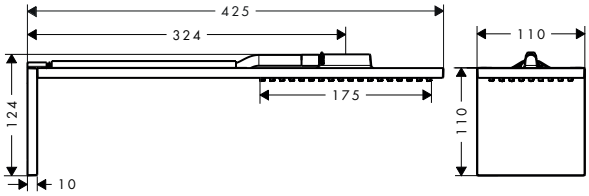

Technologies

Spray types

Shower head size	Number of sprays	Spray types	Function from (l/min)	Max. flow rate at 3 bar (l/min)	Min. flow pressure (bar)	Finish	Code no.
110/220	1	PowderRain	8.5	11.2	1.7	Chrome	12592000
						Matt Black	12592670
						AXOR FinishPlus*	12592XXX

Required parts:		Code no.
	AXOR ShowerSolutions Basic set for overhead shower with shower arm	35361180

Optional parts:		Finish	Code no.
	AXOR ShowerComposition Thermostatic module 470/110 for concealed installation for 2 functions	Chrome	12571000
		Matt Black	12571670
		AXOR FinishPlus*	12571XXX

Measurements within scale drawings are in mm.
Technical specifications and units of measure are subject to change.

Shower modules 2jet, 1jet with shoulder shower

Features of all variants

/ consists of: overhead shower, shoulder shower
/ QuickClean: Limescale deposits can simply be rubbed off with your finger
/ material spray disc overhead shower: metal
/ spraytype shoulder shower: PowderRain
/ flow rate of shoulder shower at 3 bar: 6,3 l/min
/ max. operating pressure: 6 bar
/ simultaneous use of head and shoulder shower possible
/ connection type: basic set
/ angle of shoulder shower adjustable (2 positions)

250/250

110/220

Technologies

Spray types

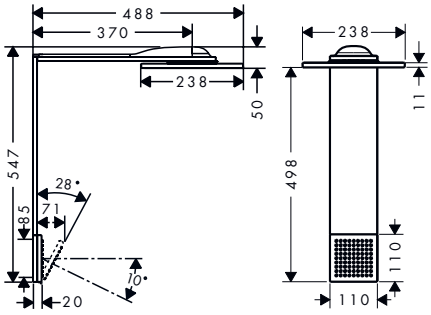

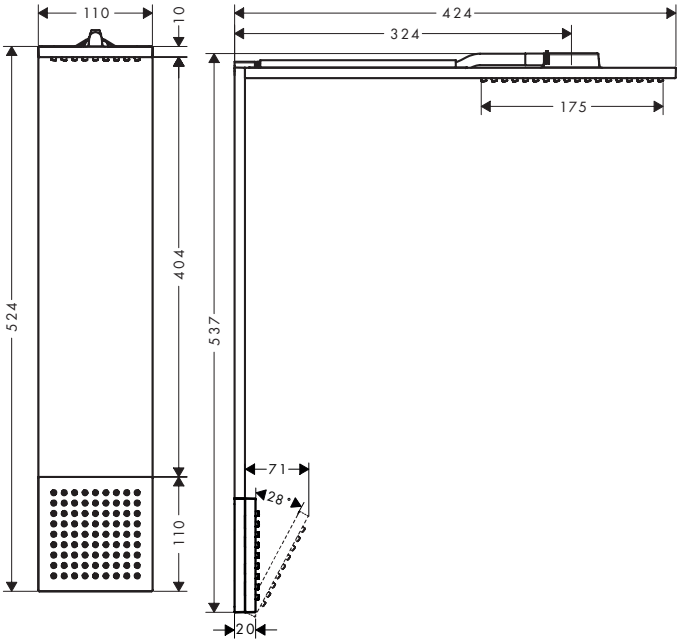

Overview variants

Shower head size	Number of sprays	Spray types overhead shower	Spray types shoulder shower	Function from (l/min)	Max. flow rate at 3 bar (l/min)	Min. flow pressure (bar)	Length shower arm (mm)	Finish	Code no.
250/250	2	PowderRain, Intense PowderRain	PowderRain	8	21.6	1.8	370	Chrome	12594000
								Matt Black	12594670
								AXOR FinishPlus*	12594XXX
110/220	1	PowderRain	PowderRain	2	17	2	324	Chrome	12593000
								Matt Black	12593670
								AXOR FinishPlus*	12593XXX

Required parts:	Code no.
AXOR ShowerSolutions Basic set for overhead shower with shower arm	35361180

*AXOR FinishPlus: For further AXOR FinishPlus surfaces please see the AXOR FinishPlus overview on page 44.

Shower panel with thermostat, overhead shower 110/220 1jet and shoulder shower

Features of all variants

/ consists of: overhead shower, shoulder shower, baton hand shower, shower thermostat, textile shower hose
/ shower head size: 110 x 220 mm
/ spray type overhead shower: PowderRain
/ flow rate PowderRain spray at 3 bar: 11,6 l/min
/ spray type body shower: PowderRain
/ flow rate of shoulder shower at 3 bar: 6,4 l/min
/ spray type hand shower: Rain, MonoRain
/ flow rate of hand shower at 3 bar: 12,3 l/min
/ maximum flow rate at 3 bar: 21,6 l/min
/ shower arm length: 324 mm
/ angle of shoulder shower adjustable (2 positions)
/ minimum flow pressure: 1,5 bar
/ scald protection at 40°
/ adjustable hot water limitation
/ isolated water conduction
/ mounting type: concealed
/ max. operating pressure: 10 bar
/ projection: 425 mm
/ use of outlets: simultaneous use of several outlets
/ connection type: basic set
/ Eco-Function: depending on volume flow and installation situation approx. 50% flow rate reduction and integrated shut off function
/ function from: 6,8 l/min

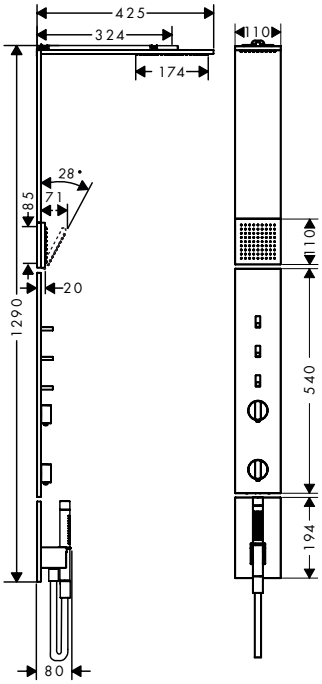

Technologies

Spray types

Shower head size	Number of sprays	Spray types	Function from (l/min)	Max. flow rate at 3 bar (l/min)	Min. flow pressure (bar)	Finish	Code no.
110/220	1	PowderRain	6.8	21.6	1.5	Chrome	12595000
						Matt Black	12595670
						AXOR FinishPlus*	12595XXX

Required parts:	Code no.
AXOR ShowerComposition Basic set for shower panel	12676180

Measurements within scale drawings are in mm.
Technical specifications and units of measure are subject to change.

Shoulder shower 110/110 1jet

Features of all variants

/ shower head size: 110 x 110 mm
/ spray type: PowderRain
/ angle of shower adjustable (2 positions)
/ maximum flow rate at 3 bar: 6,8 l/min
/ flow rate PowderRain spray at 3 bar: 6,8 l/min
/ minimum flow pressure: 1,2 bar
/ operating pressure: min. 1 bar/max. 6 bar
/ suitable for continous flow water heaters
/ connection dimension: DN15
/ material: metal
/ connection type: basic set
/ EU taxonomy: max. 8 l/min - Do No Significant Harm (DNSH)

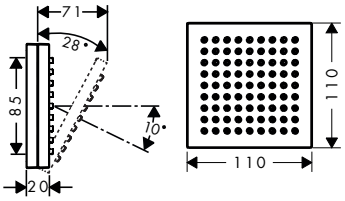

Special feature

EcoSmart

Technologies

Quick Clean

Spray types

Powder Rain

Shower head size	Number of sprays	Spray types	Function from (l/min)	Max. flow rate at 3 bar (l/min)	Min. flow pressure (bar)	Finish	Code no.
110/110	1	PowderRain	4.2	6.8	1.2	Chrome	12596000
						Matt Black	12596670
						AXOR FinishPlus*	12596XXX

Required parts:	Code no.
AXOR ShowerSolutions Basic set for overhead shower with shower arm	35361180

Thermostatic modules for concealed installation

Features of all variants

/ consists of: thermostatic module, shower holder, baton hand shower, textile shower hose
/ simultaneous use of several outlets
/ sliding movement of handle for switching water on and off, temperature and water flow control
/ depending on volume flow and installation situation approx. 50% flow rate reduction and integrated shut off function
/ thermostat cartridge, Start/stop valve to operate the functions
/ spray type hand shower: Rain, MonoRain
/ flow rate per outlet: 26 l/min
/ min. operating pressure: 1 bar
/ max. operating pressure: 10 bar
/ Safety stop at 40 °C
/ temperature limitation adjustable
/ non-return valve
/ connection type: basic set

2 functions

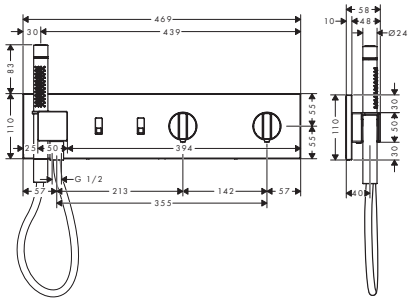

3 functions

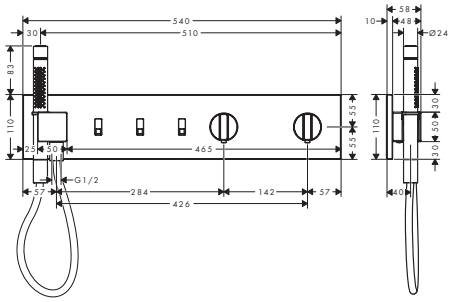

4 functions

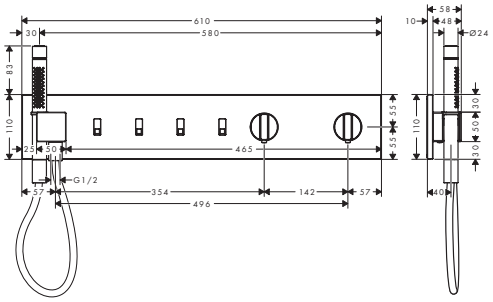

Special feature

Water Flow Control

Technologies

Thermostat | Quick Clean | Safety Stop 40°C

Spray types

Rain | Mono Rain

For more information about this product, please see the next page.

*AXOR FinishPlus: For further AXOR FinishPlus surfaces please see the AXOR FinishPlus overview on page 44.

Thermostatic modules for concealed installation

Overview variants

Product dimensions (mm)	Number of functions	Flow rate per user	Flow rate by simultaneous use of all outlets	flow rate of hand shower at 3 bar (l/min)	Finish	Code no.
470/110	2 functions	26	32.7	11.4	Chrome	12571000
					Matt Black	12571670
					AXOR FinishPlus*	12571XXX
540/110	3 functions	26	32.7	11.4	Chrome	12572000
					Matt Black	12572670
					AXOR FinishPlus*	12572XXX
610/110	4 functions	26	34	13.5	Chrome	12573000
					Matt Black	12573670
					AXOR FinishPlus*	12573XXX

Required parts:		For	Code no.
	Basic set for thermostatic module Select for 2 functions	12571XXX	18310180
	Basic set for thermostatic module Select for 3 functions	12572XXX	18311180
	Basic set for thermostatic module Select for 4 functions	12573XXX	18312180

Optional parts:		For	Finish	Code no.
	Handle with symbol wide flood jet	12571XXX	Chrome	85210000
			Matt Black	85210670
			AXOR FinishPlus*	85210XXX
	Handle with symbol bath tub	12571XXX	Chrome	85211000
			Matt Black	85211670
			AXOR FinishPlus*	85211XXX
	Handle with symbol mono spray	12571XXX	Chrome	85212000
			Matt Black	85212670
			AXOR FinishPlus*	85212XXX
	Handle with symbol handshower	12571XXX	Chrome	87716000
			Matt Black	87716670
			AXOR FinishPlus*	87716XXX
	Handle with symbol bodyshower	12571XXX	Chrome	87717000
			Matt Black	87717670
			AXOR FinishPlus*	87717XXX
	Handle with symbol overhead shower PowderRain	12571XXX	Chrome	87718000
			Matt Black	87718670
			AXOR FinishPlus*	87718XXX
	Handle with symbol overhead shower Intense PowderRain	12571XXX	Chrome	87719000
			Matt Black	87719670
			AXOR FinishPlus*	87719XXX

Measurements within scale drawings are in mm.
Technical specifications and units of measure are subject to change.

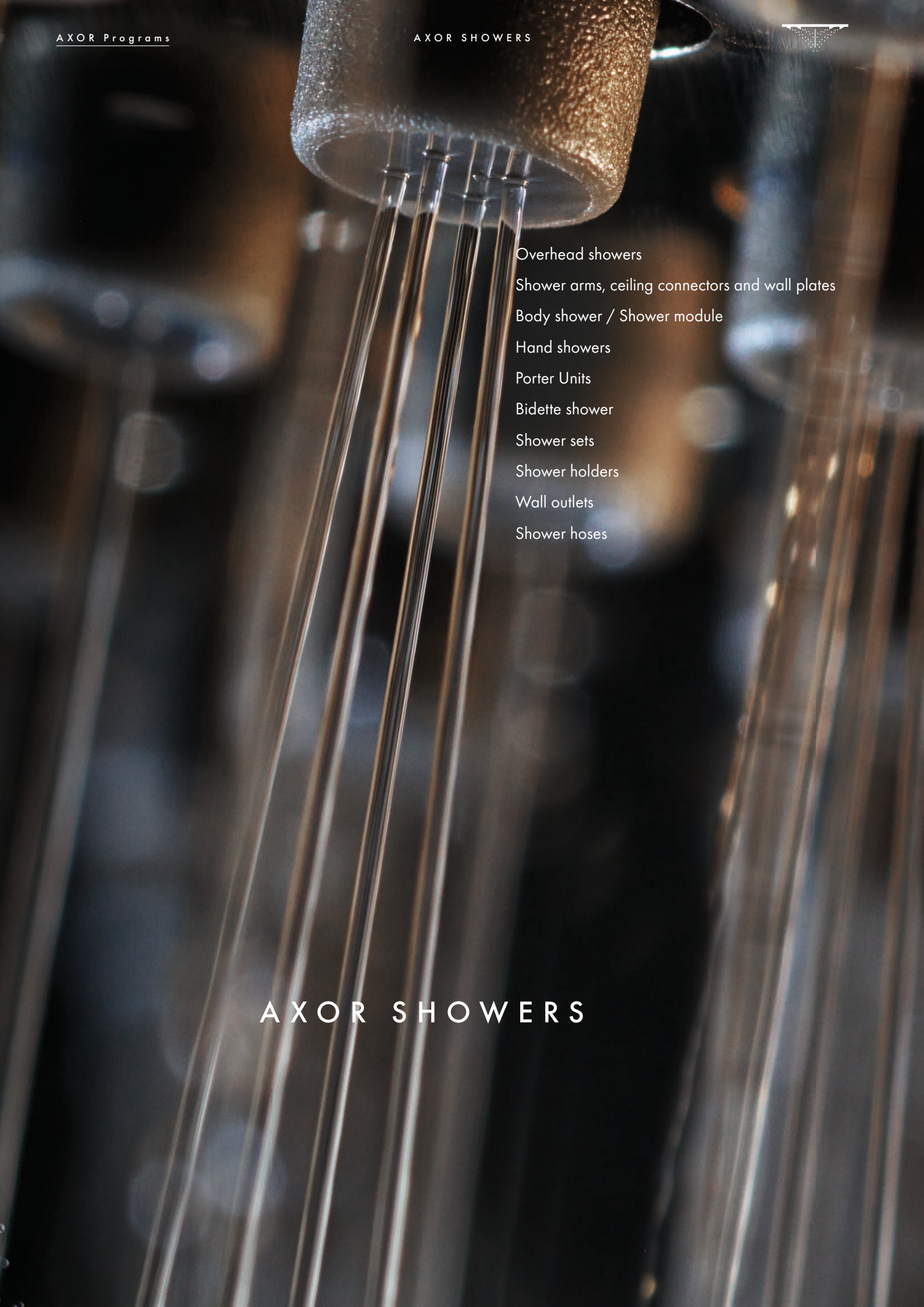

Overhead showers

Shower arms, ceiling connectors and wall plates

Body shower / Shower module

Hand showers

Porter Units

Bidette shower

Shower sets

Shower holders

Wall outlets

Shower hoses

AXOR SHOWERS

AXOR shower products represent design, innovation and water experiences at the highest level.

AXOR Showers

Excellence in the shower

Three features distinguish the various AXOR shower products: All are luxurious design objects, shape the space definitively and provide fascinating experiences of water. AXOR Showers impart a sense of appreciation for water and for the body.

Design: Philippe Starck, PHOENIX, Nendo, Front, Barber Osgerby, Antonio Citterio

Characteristic design feature:

Avant-garde design objects with universal appeal—for combinations across different collections.

The designer's idea:

Luxury in the shower: AXOR Showers offer fascinating design, perfect function and a one-of-a-kind water experience. The user is the focus of the luxurious physical experience provided by an AXOR Shower.

Special program highlights:

/ AXOR ShowerHeaven 1200/300 4jet: Large dimensions and the innovative PowderRain spray mode impart a spa feel

/ AXOR ShowerSphere: Monolithic, elliptical design combined with a generous low-volume spray

/ AXOR LampShower designed by Nendo: A source of light and water

/ AXOR Conscious Showers: sustainable water use while setting highest aesthetic standards

/ Wide variety of spray modes for various applications: From invigorating to massaging to softly enveloping

→ Learn more about AXOR Showers: axor-design.com

AXOR Spray modes

INTENSE POWDERRAIN

A powerful, concentrated shower spray invigorates the body and mind.

POWDERRAIN

Gentle droplets wrap-around the body like a cocoon of water.

RAINAIR

Air-enriched water. For soft shower droplets in a full water jet.

RAIN

Lush, powerful spray with an invigorating effect. Perfect for rinsing hair.

RAINSTREAM

Voluminous beads of water. Precisely compacted into individual, parallel strands.

RAIN XL

A large-scale shower experience—surrounding the entire body.

RAIN/POWDERRAIN

Combination of powerful Rain and gently enveloping PowderRain sprays.

RAINFLOW

Powerful gush spray. Wets the body over a large area, like a waterfall.

MONORAIN

Intense, bundled spray. Pointed refreshment and relaxation.

WHIRLAIR

Concentrated water jet. Especially suited for body massages.

Spray innovation in the shower

The AXOR ShowerHeaven 1200/300 4jet is a new archetype in the shower, offering a grand stage for water. Here, it is staged in an extraordinary way: with a revitalizing water jet, a soothing rain shower, all the way up to the gentle PowderRain – the AXOR innovation in water design. Here, countless velvety-soft water droplets envelop the body like a cocoon of water.

Extension set

/ The optional extension set (# 13603000) makes the product appear to float, providing a sense of weightlessness

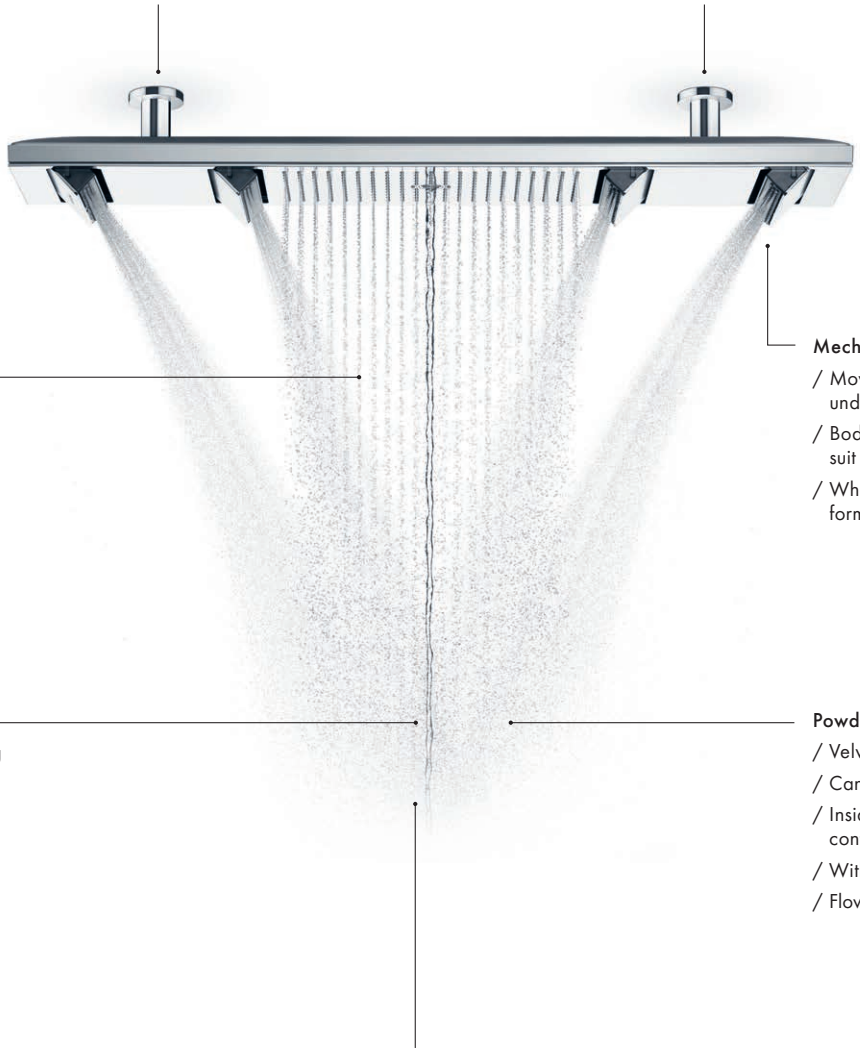

Rain jet

/ Shower rain that surrounds the whole body
/ Geometric spray field, perfectly adapted to the user's body
/ Spray field, 460 mm in width
/ With QuickClean function
/ Flow rate: 16 l/min. (at 3 bar)

Mechanical wings

/ Movable flaps that open under water pressure
/ Body jet can be angled to suit different user heights
/ When not in use, the flaps close to form a flat, easy to clean surface

MonoRain

/ Concentrated, soothing, relaxing jet for a real spa feeling
/ Flow rate: 15 l/min (at 3 bar)

PowderRain body spray

/ Velvety soft shower rain
/ Can be set to leave the head dry
/ Inside and outside flaps controlled separately
/ With QuickClean function
/ Flow rate: approx.12 l/min (at 3 bar)

Using the resource of water

/ Flow rate: max. 30 l/min (at 3 bar) if all outlets are used simultaneously
/ Water supply assisted with DN15 standard connection

AXOR ShowerSphere: More comfort. Less water.
A new shape but the same timeless, characteristic elegance.

Antonio Citterio's latest shower program, AXOR ShowerSphere, impresses with its unique elliptical design; its generous low flow rate sprays; and the wide variety of luxurious shower experiences it provides. Comprehensive in its offering, extraordinary yet universal in design, AXOR ShowerSphere excels in virtually any bathroom environment while harmonizing exquisitely with products across the AXOR portfolio and Citterio's other collections in particular.

Design: Antonio Citterio

Overhead shower 370/220 2jet with adjustable shower arm

The unique design of AXOR ShowerSphere is characterized by a monolithic, elliptical shower cover with slanted edges, supported by a minimalist softsquare escutcheon and shower arm.

Monolithic design for the shower

The AXOR One overhead showers and hand showers feature monolithic forms and an innovative organization of Rain and PowderRain spray types, reflected in the distinctive graphic language of the showerhead's spray disc. Available in 1jet and 2jet versions, the overhead shower 280 offers both spray types.

Rain spray

/ 5 separate spray circles result in a body covering shower experience

PowderRain

/ 5 inner spray circles build a caressing PowderRain spray

The AXOR One overhead shower 75 1jet is configured as a shoulder shower with a flow rate of max. 8,7 l/min. (at 3 bar)

Purist design combined with a fascinating water experience in the shower

Purist design—based on the circle and square – characterizes the circular version of the AXOR overhead showers with diameters of 250 mm and 300 mm and the square versions of 250/250 mm and 300/300 mm. All versions are made for universal use and are compatible with every luxury shower design. Clear geometric forms with flat surfaces are the style-defining element throughout – from the spray disc to the ceiling or wall cover plate. Made of high-quality metal—with a bright Chrome surface or finished with one of the many special AXOR FinishPlus surfaces—the showers are perfect design elements for the bathroom. Inside: a technical masterpiece. The specially developed spray nozzles only become visible when the water is on and disappear again when the shower is switched off. This technology is based on water pressure and functions without any additional mechanism.

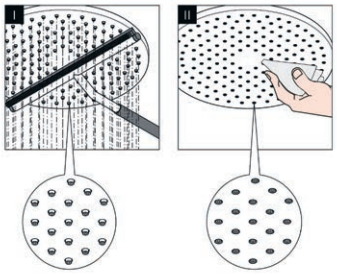

The integrated ServiceCard contains the shower filters. No tools are required to remove the overhead shower to clean the filters because the ServiceCard allows simple, efficient access to them. This makes necessary occasional maintenance more efficient and saves operating costs.

The dynamic spray nozzles emphasize the purist design of the high-quality metal spray disc. Because the disc has a flat surface without silicone naps, water droplets and limescale deposits can be easily removed from the spray disc with a towel or squeegee scraper. Thanks to the QuickClean function, limescale deposits can be simply wiped from the silicone naps. The bayonet connection allows the shower head to be easily removed, e.g. to be placed in solution to remove calcium deposits.

PowderRain

Intense PowderRain

PowderRain + Intense PowderRain

Innovative PowderRain and Intense PowderRain spray modes: PowderRain provides a fine rain shower (flow rate: 16–20 l/min at 3 bar) that feels like an enveloping cocoon of water. Or Intense PowderRain—a powerful spray jet (flow rate: 15–18 l/min at 3 bar) and a true innovation among the 2jet versions.

A source of light and water

The AXOR LampShower designed by Nendo integrates lighting with the shower to form an exclusive design object. The integrated lighting blurs the lines that normally divide a space to bring a sense of coziness to the shower. A wide wreath of rain completely surrounds the body with water.

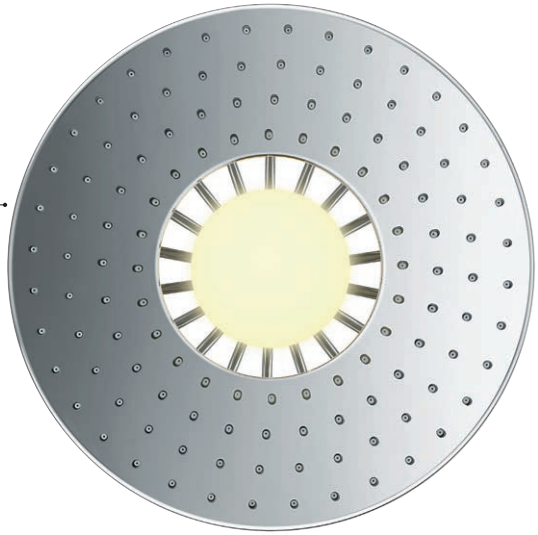

Spray disc

/ Made of pure metal

/ Diameter: 275 mm

/ Can be removed for easy cleaning

Shower arm

/ Length: 380 mm, can swivel horizontally in a range of 150°

/ Perfect shower jet alignment

Ball joint

/ Can be adjusted by 5° for the ideal spray direction

Lighting

/ Energy-efficient LED illuminant (4 W)

/ Power supply: Input voltage 100–240 V AC, 50–60 Hz/output voltage 12 V DC

/ Incl. power supply unit 12 V, 12 W

/ Color temperature warm white 2,700 K

/ Power supply: 7 m connection cable with power supply unit 12 V

/ Lighting controlled by a separate switch outside the shower

Spray mode

/ Gentle rain jet for an exceptional shower experience

/ With QuickClean function

/ Flow rate: 13 l/min (at 3 bar)

AXOR Conscious Showers. Water is precious.

Delightful showers are some of the most precious moments in our daily routines. To make a ritual like this as pleasant a it is responsible, AXOR has developed Conscious Showers. All shower products in this range are characterized by low water consumption, starting from 6 l/min.

AXOR Conscious Showers meet the specific requirements for sustainable use of the precious element of water, while satisfying even the highest aesthetic demands. Whether in round or square design, they can be combined with AXOR bathroom collections in a variety of styles.

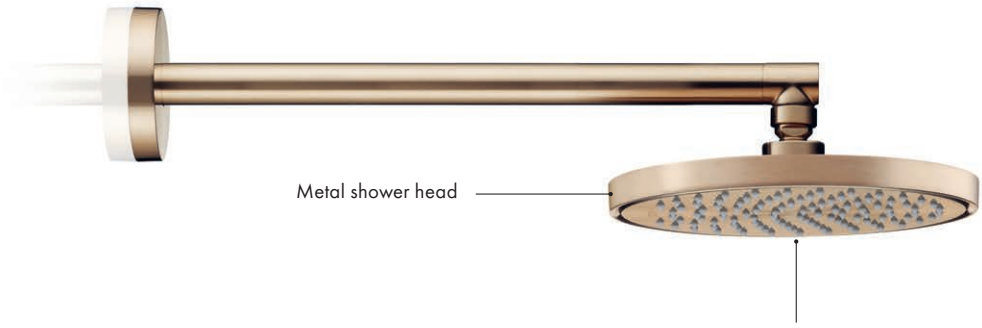

AXOR Overhead Shower 220 1jet

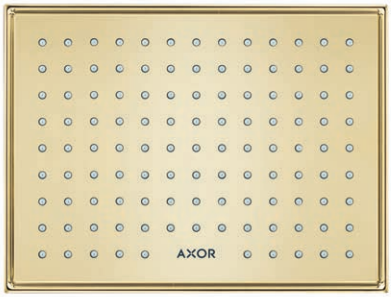

AXOR Overhead Shower 245/180 1jet

AXOR Overhead Shower 245 1jet

AXOR ShowerSolutions ShowerHeaven 1200/300 4jet with lighting

Features of all variants

/ shower head size: 1200 x 300 mm
/ spray type: PowderRain, Rain, MonoRain
/ flow rate PowderRain spray outer at 3 bar: 12 l/min
/ flow rate PowderRain spray inner at 3 bar: 12 l/min
/ flow rate Rain spray at 3 bar: 16 l/min
/ flow rate MonoRain spray at 3 bar: 15 l/min
/ function from: 10,5 l/min
/ maximum flow rate at 3 bar: 21 l/min
/ minimum flow pressure: 1,8 bar
/ material spray disc: metal
/ overhead shower removable for cleaning
/ extendable flaps can be opened manually
/ metal ceilling connector
/ ceiling connection length: 100 mm
/ spray types can be activated individually or in combination
/ installation: ceiling mounting, extendable claps can be pre-set to the user size
/ connection dimension: DN15
/ connection type: basic set
/ with integrated lighting
/ illuminant: LED
/ power supply: 24 V
/ transformer power supply, 24 V, max. 30 W
/ input voltage: 100 – 240 V AC / 50 / 60 Hz
/ output voltage: 24 V DC
/ Light color: neutral white
/ IP degree of protection: IPX5

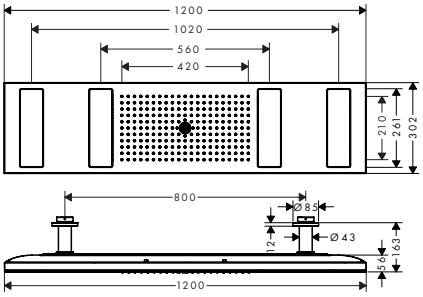

Technologies

Spray types

Overview variants

Shower head size	Number of sprays	Spray types	Colour temperature	Function from (l/min)	Max. flow rate at 3 bar (l/min)	Min. flow pressure (bar)	Transformer power supply	Finish	Code no.
1200/300	4	PowderRain, Rain, MonoRain	3500 K	10.5	21	1.8	24 V, 30 W	Chrome	12427000
								AXOR FinishPlus*	12427XXX
1200/300	4	PowderRain, Rain, MonoRain	5000 K	10.5	21	1.8	24 V, 30 W	Chrome	12423000
								AXOR FinishPlus*	12423XXX

Required parts:		Code no.
	AXOR ShowerSolutions Basic set for ShowerHeaven 1200/300 4jet with light module	12922180

Optional parts:		Finish	Code no.
	AXOR ShowerSolutions Thermostatic module Select 670/90 for concealed installation for 5 functions	Chrome	18358000
		AXOR FinishPlus*	18358XXX
	AXOR ShowerSolutions Extension set 230 mm for ceiling connector ShowerHeaven 1200/300 4jet	Chrome	13603000
		AXOR FinishPlus*	13603XXX

AXOR ShowerSolutions ShowerHeaven 1200/300 4jet without lighting

Features of all variants

/ shower head size: 1200 x 300 mm
/ spray type: PowderRain, Rain, MonoRain
/ flow rate PowderRain spray outer at 3 bar: 11 l/min
/ flow rate PowderRain spray inner at 3 bar: 12 l/min
/ flow rate Rain spray at 3 bar: 16 l/min
/ flow rate MonoRain spray at 3 bar: 14 l/min
/ function from: 10,5 l/min
/ maximum flow rate at 3 bar: 21 l/min
/ minimum flow pressure: 1,8 bar
/ material spray disc: metal
/ overhead shower removable for cleaning
/ extendable flaps can be opened manually
/ metal ceilling connector
/ ceiling connection length: 100 mm
/ spray types can be activated individually or in combination
/ installation: ceiling mounting, extendable claps can be pre-set to the user size
/ connection dimension: DN15
/ connection type: basic set

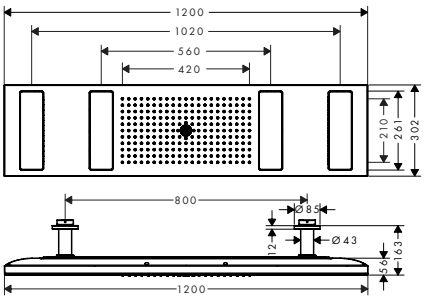

Technologies

Spray types

Measurements within scale drawings are in mm.
Technical specifications and units of measure are subject to change.

AXOR ShowerSolutions ShowerHeaven 1200/300 4jet without lighting

Shower head size	Number of sprays	Spray types	Function from (l/min)	Max. flow rate at 3 bar (l/min)	Min. flow pressure (bar)	Finish	Code no.
1200/300	4	PowderRain, Rain, MonoRain	10.5	21	1.8	Chrome	10637000
						AXOR FinishPlus*	10637XXX

Required parts:		Code no.
	AXOR ShowerSolutions Basic set for ShowerHeaven 1200/300 4jet	10922180

Optional parts:		Finish	Code no.
	AXOR ShowerSolutions Extension set 230 mm for ceiling connector ShowerHeaven 1200/300 4jet	Chrome	13603000
		AXOR FinishPlus*	13603XXX
	AXOR ShowerSolutions Thermostatic module Select 670/90 for concealed installation for 5 functions	Chrome	18358000
		AXOR FinishPlus*	18358XXX

AXOR ShowerSolutions ShowerHeaven 3jet with lighting

Features of all variants

/ spray type: RainAir, Rain, MonoRain
/ minimum flow pressure: 2,5 bar
/ spray zones: Bodyzone – outer overhead shower zone, Rainzone – inner overhead shower zone with AirPower function, MonoRain spray at Ø 17 mm
/ frame: brushed stainless steel
/ material spray disc: metal
/ spray disc surface: polished stainless steel
/ spray types can be activated individually or in combination, the 3 spray zones must be controlled via 3 valves or a diverter valve with 3 outlets
/ installation: ceiling mounting
/ connection dimension: DN20
/ with integrated lighting
/ illuminant: LED
/ power supply: 12 V
/ transformer power supply for concealed installation 12 V, 18 W
/ input voltage: 100 – 240 V AC / 50 / 60 Hz
/ output voltage: 12 V DC
/ colour temperature: 2700 K
/ Light color: warm white
/ energy efficiency class: contains light sources of energy efficiency class G
/ not suitable for continuous flow water heaters

970/970

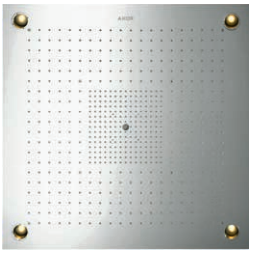

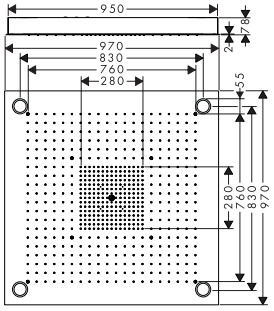

720/720

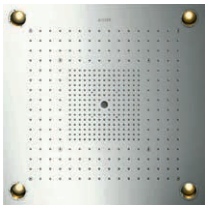

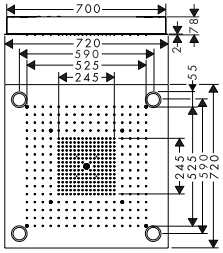

Technologies

Spray types

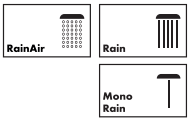

Overview variants

Shower head size	Number of sprays	Spray types	Function from (l/min)	Max. flow rate at 3 bar (l/min)	Min. flow pressure (bar)	Finish	Code no.
970/970	3	RainAir, Rain, MonoRain	32	33.3	2.5	Stainless Steel Optic	10623800
720/720	3	RainAir, Rain, MonoRain	30	36.8	2.5	Stainless Steel Optic	10627800

*AXOR FinishPlus: For further AXOR FinishPlus surfaces please see the AXOR FinishPlus overview on page 44.

AXOR ShowerSolutions ShowerHeaven 3jet without lighting

Features of all variants

/ spray type: RainAir, Rain, MonoRain
/ minimum flow pressure: 2,5 bar
/ spray zones: Bodyzone – outer overhead shower zone, Rainzone – inner overhead shower zone with AirPower function, MonoRain spray at Ø 17 mm
/ frame: brushed stainless steel
/ material spray disc: metal
/ spray disc surface: polished stainless steel
/ the 3 spray zones must be controlled via 3 valves or a diverter valve with 3 outlets, spray types can be activated individually or in combination
/ installation: ceiling mounting
/ connection dimension: DN20
/ not suitable for continuous flow water heaters

970/970

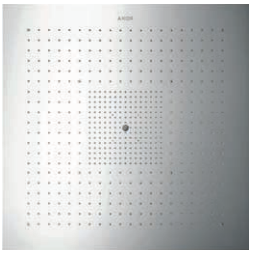

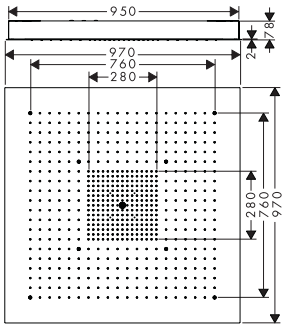

720/720

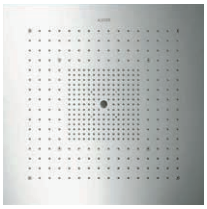

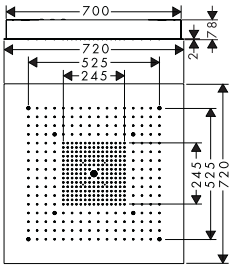

Technologies

Spray types

Overview variants

Shower head size	Number of sprays	Spray types	Function from (l/min)	Max. flow rate at 3 bar (l/min)	Min. flow pressure (bar)	Finish	Code no.
970/970	3	RainAir, Rain, MonoRain	32	42	2.5	Stainless Steel Optic	10621800
720/720	3	RainAir, Rain, MonoRain	30	43	2.5	Stainless Steel Optic	10625800

AXOR ShowerSphere Overhead showers 2jet with adjustable shower arm

Features of all variants

/ consists of: overhead shower, shower arm
/ shower head size: 370 x 220 mm
/ spray type: PowderRain, Rain
/ FlexPower: nozzles automatically adjust to water pressure by opening and closing
/ QuickClean+: avoid limescale deposits thanks to the elasticity of the nozzles
/ overhead shower inclinable by 0-35°
/ material spray disc: metal
/ overhead shower removable for cleaning
/ Adjustable Shower Arm: for easy adjustment of shower head on body height, mechanical interlock in every position, steppless adjustment
/ shower arm length: 105 mm
/ metal shower arm
/ installation: wall
/ mounting type: concealed
/ connection type: basic set
/ suitable for continous flow water heaters

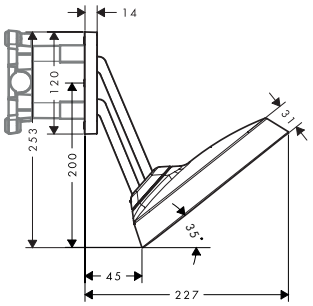

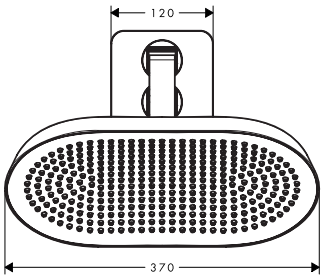

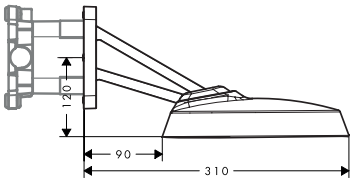

Special feature

Technologies

Spray types

Measurements within scale drawings are in mm.
Technical specifications and units of measure are subject to change.

AXOR ShowerSphere Overhead showers 2jet with adjustable shower arm

Overview variants

Shower head size	Number of sprays	Spray types	Function from (l/min)	Max. flow rate at 3 bar (l/min)	Min. flow pressure (bar)	Finish	Code no.
370/220	2	PowderRain, Rain	4.8	6.7	0.9	Chrome	39746000
						Brushed Bronze	39746140
						Brushed Black Chrome	39746340
						Brushed Nickel	39746820
						Polished Gold Optic	39746990
						AXOR FinishPlus*	39746XXX
370/220	2	PowderRain, Rain	5.9	11	1	Chrome	39745000
						Brushed Bronze	39745140
						Brushed Black Chrome	39745340
						Brushed Nickel	39745820
						Polished Gold Optic	39745990
						AXOR FinishPlus*	39745XXX

Required parts:	Code no.
AXOR ShowerSolutions Basic set for overhead shower with shower arm	35361180

AXOR ShowerSphere Overhead showers 1jet with shower arm

Features of all variants

/ consists of: overhead shower, shower arm
/ spray type: Rain
/ FlexPower: nozzles automatically adjust to water pressure by opening and closing
/ QuickClean+: avoid limescale deposits thanks to the elasticity of the nozzles
/ material spray disc: metal
/ overhead shower removable for cleaning
/ metal shower arm
/ installation: wall
/ connection thread: G ½
/ connection dimension: DN15
/ suitable for continous flow water heaters

370/220

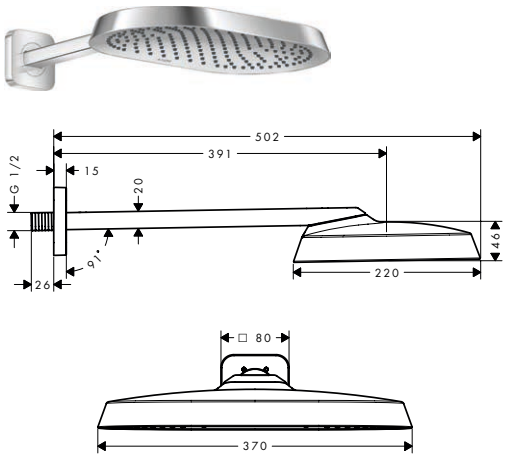

250/160

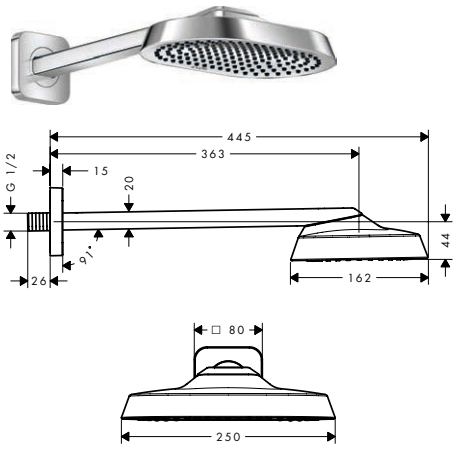

Special feature

Technologies

Spray types

Overview variants

Shower head size	Number of sprays	Spray types	Function from (l/min)	Max. flow rate at 3 bar (l/min)	Min. flow pressure (bar)	Finish	Code no.
370/220	1	Rain	4.6	8	0.7	Chrome	39749000
						Brushed Bronze	39749140
						Brushed Black Chrome	39749340
						Brushed Nickel	39749820
						Polished Gold Optic	39749990
						AXOR FinishPlus*	39749XXX

For more information about this product, please see the next page.

*AXOR FinishPlus: For further AXOR FinishPlus surfaces please see the AXOR FinishPlus overview on page 44.

AXOR ShowerSphere Overhead showers 1jet with shower arm

Overview variants

Shower head size	Number of sprays	Spray types	Function from (l/min)	Max. flow rate at 3 bar (l/min)	Min. flow pressure (bar)	Finish	Code no.
370/220	1	Rain	6.5	11.2	1.2	Chrome	39748000
						Brushed Bronze	39748140
						Brushed Black Chrome	39748340
						Brushed Nickel	39748820
						Polished Gold Optic	39748990
						AXOR FinishPlus*	39748XXX
250/160	1	Rain	4.5	6	0.7	Chrome	39770000
						Brushed Bronze	39770140
						Brushed Black Chrome	39770340
						Brushed Nickel	39770820
						Polished Gold Optic	39770990
						AXOR FinishPlus*	39770XXX
250/160	1	Rain	3.5	8	0.3	Chrome	39755000
						Brushed Bronze	39755140
						Brushed Black Chrome	39755340
						Brushed Nickel	39755820
						Polished Gold Optic	39755990
						AXOR FinishPlus*	39755XXX
250/160	1	Rain	6.5	10.5	1.2	Chrome	39754000
						Brushed Bronze	39754140
						Brushed Black Chrome	39754340
						Brushed Nickel	39754820
						Polished Gold Optic	39754990
						AXOR FinishPlus*	39754XXX

Optional parts:		Finish	Code no.
	AXOR ShowerSphere Escutcheon 120/120 softsquare	Chrome	39769000
		Brushed Bronze	39769140
		Brushed Black Chrome	39769340
		Brushed Nickel	39769820
		Polished Gold Optic	39769990
		AXOR FinishPlus*	39769XXX

Measurements within scale drawings are in mm.
Technical specifications and units of measure are subject to change.

AXOR ShowerSphere Overhead showers 2jet, 1jet with ceiling connector

Features of all variants

/ consists of: overhead shower, ceiling connector
/ FlexPower: nozzles automatically adjust to water pressure by opening and closing
/ QuickClean+: avoid limescale deposits thanks to the elasticity of the nozzles
/ material spray disc: metal
/ overhead shower removable for cleaning
/ metal ceilling connector
/ ceiling connection length: 145 mm
/ installation: ceiling mounting
/ suitable for continous flow water heaters

370/220

250/160

Special feature

Technologies

Spray types

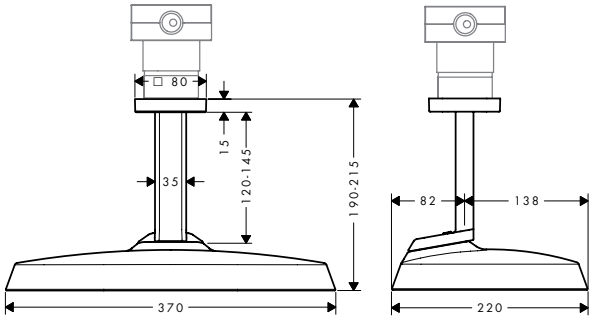

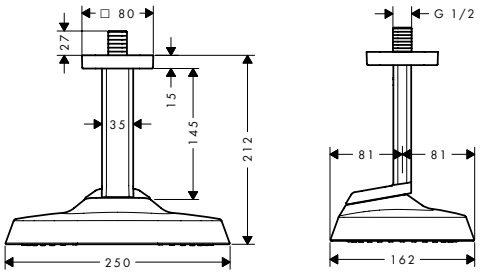

Overview variants

Shower head size	Number of sprays	Spray types	Function from (l/min)	Max. flow rate at 3 bar (l/min)	Min. flow pressure (bar)	Finish	Code no.
370/220	2	PowderRain, Rain	5.5	6.7	1	Chrome	39758000
						Brushed Bronze	39758140
						Brushed Black Chrome	39758340
						Brushed Nickel	39758820
						Polished Gold Optic	39758990
						AXOR FinishPlus*	39758XXX
370/220	2	PowderRain, Rain	5.5	10.4	1	Chrome	39757000
						Brushed Bronze	39757140
						Brushed Black Chrome	39757340
						Brushed Nickel	39757820
						Polished Gold Optic	39757990
						AXOR FinishPlus*	39757XXX
370/220	1	Rain	3.4	6.6	0.4	Chrome	39761000
						Brushed Bronze	39761140
						Brushed Black Chrome	39761340
						Brushed Nickel	39761820
						Polished Gold Optic	39761990
						AXOR FinishPlus*	39761XXX
370/220	1	Rain	7.3	12	1	Chrome	39760000
						Brushed Bronze	39760140
						Brushed Black Chrome	39760340
						Brushed Nickel	39760820
						Polished Gold Optic	39760990
						AXOR FinishPlus*	39760XXX

For more information about this product, please see the next page.

*AXOR FinishPlus: For further AXOR FinishPlus surfaces please see the AXOR FinishPlus overview on page 44.

AXOR ShowerSphere Overhead showers 2jet, 1jet with ceiling connector

Overview variants

Shower head size	Number of sprays	Spray types	Function from (l/min)	Max. flow rate at 3 bar (l/min)	Min. flow pressure (bar)	Finish	Code no.
250/160	1	Rain	4.5	6	0.7	Chrome	39771000
						Brushed Bronze	39771140
						Brushed Black Chrome	39771340
						Brushed Nickel	39771820
						Polished Gold Optic	39771990
						AXOR FinishPlus*	39771XXX
250/160	1	Rain	4.6	8	0.7	Chrome	39764000
						Brushed Bronze	39764140
						Brushed Black Chrome	39764340
						Brushed Nickel	39764820
						Polished Gold Optic	39764990
						AXOR FinishPlus*	39764XXX
250/160	1	Rain	5.9	12	0.9	Chrome	39763000
						Brushed Bronze	39763140
						Brushed Black Chrome	39763340
						Brushed Nickel	39763820
						Polished Gold Optic	39763990
						AXOR FinishPlus*	39763XXX

39757XXX
39758XXX
Optional for 2jet overhead showers with ceiling connector: change escutcheon size to 120/120 dimension via AXOR Signature request.

Required parts:		For	Code no.
	AXOR ShowerSphere Basic set for overhead shower 2jet with ceiling connector	39758XXX 39757XXX	39766180

Optional parts:		For	Finish	Code no.
	AXOR ShowerSphere Ceiling connector 300 mm for overhead shower 2jet	39758XXX 39757XXX	Chrome	39768000
			Brushed Bronze	39768140
			Brushed Black Chrome	39768340
			Brushed Nickel	39768820
			Polished Gold Optic	39768990
			AXOR FinishPlus*	39768XXX
	AXOR ShowerSphere Ceiling connector 300 mm for overhead shower 1jet	39761XXX 39760XXX 39771XXX 39764XXX 39763XXX	Chrome	39767000
			Brushed Bronze	39767140
			Brushed Black Chrome	39767340
			Brushed Nickel	39767820
			Polished Gold Optic	39767990
			AXOR FinishPlus*	39767XXX
	AXOR ShowerSphere Escutcheon 120/120 softsquare	39761XXX 39760XXX 39771XXX 39764XXX 39763XXX	Chrome	39769000
			Brushed Bronze	39769140
			Brushed Black Chrome	39769340
			Brushed Nickel	39769820
			Polished Gold Optic	39769990
			AXOR FinishPlus*	39769XXX

Measurements within scale drawings are in mm.
Technical specifications and units of measure are subject to change.

AXOR Citterio C Overhead shower 120/120 1jet EcoSmart with shower arm

Features of all variants

/ consists of: overhead shower, shower arm
/ shower head size: 120 x 120 mm
/ spray type: PowderRain
/ flow regulator: 7 l/min (with possible tolerances ± 10 %)
/ flow rate PowderRain spray at 3 bar: 6,6 l/min
/ function from: 4,4 l/min
/ maximum flow rate at 3 bar: 6,6 l/min
/ minimum flow pressure: 0,7 bar
/ projection: 122 mm
/ overhead shower angle adjustable
/ material spray disc: metal
/ overhead shower removable for cleaning
/ shower arm length: 90 mm
/ installation: wall, shower can be installed as a shoulder shower or overhead shower
/ connection thread: G ½
/ connection dimension: DN15
/ suitable for continous flow water heaters
/ EU taxonomy: max. 8 l/min – Do No Significant Harm (DNSH)

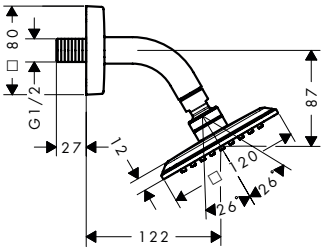

Special feature

EcoSmart

Technologies

Quick Clean

Spray types

Powder Rain

Shower head size	Number of sprays	Spray types	Function from (l/min)	Max. flow rate at 3 bar (l/min)	Min. flow pressure (bar)	Finish	Code no.
120/120	1	PowderRain	4.4	6.6	0.7	Chrome	28810000
						Brushed Bronze	28810140
						Brushed Black Chrome	28810340
						Brushed Nickel	28810820
						Polished Gold Optic	28810990
						AXOR FinishPlus*	28810XXX

This product is not available in the AXOR FinishPlus surface Matt Black.

Optional parts:		Finish	Code no.
	AXOR Citterio C Wall escutcheon 120/120 softsquare	Chrome	28801000
		AXOR FinishPlus*	28801XXX

AXOR Citterio C Overhead showers 1jet with shower arm

Features of all variants

/ consists of: overhead shower, shower arm
/ shower head size: 270 x 270 mm
/ spray type: PowderRain
/ material spray disc: metal
/ overhead shower removable for cleaning
/ shower arm length: 390 mm
/ installation: wall
/ connection thread: G ½
/ suitable for continous flow water heaters

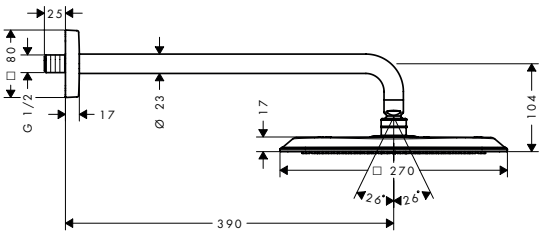

Special feature

EcoSmart

Technologies

Quick Clean

Spray types

Powder Rain

For more information about this product, please see the next page.

*AXOR FinishPlus: For further AXOR FinishPlus surfaces please see the AXOR FinishPlus overview on page 44.

AXOR Citterio C Overhead showers 1jet with shower arm

Overview variants

Shower head size	Number of sprays	Spray types	Function from (l/min)	Max. flow rate at 3 bar (l/min)	Min. flow pressure (bar)	Finish	Code no.
270/270	1	PowderRain	6	6.5	1.5	Chrome	28791000
						Brushed Bronze	28791140
						Brushed Black Chrome	28791340
						Matt Black	28791670
						Brushed Nickel	28791820
						Polished Gold Optic	28791990
						AXOR FinishPlus*	28791XXX
270/270	1	PowderRain	7.5	11	1	Chrome	28790000
						Brushed Bronze	28790140
						Brushed Black Chrome	28790340
						Matt Black	28790670
						Brushed Nickel	28790820
						Polished Gold Optic	28790990
						AXOR FinishPlus*	28790XXX

Optional parts:		Finish	Code no.
	AXOR Citterio C Wall escutcheon 120/120 softsquare	Chrome	28801000
		Matt Black	28801670
		AXOR FinishPlus*	28801XXX

AXOR Citterio C Overhead showers 1jet with ceiling connector

Features of all variants

/ consists of: overhead shower, ceiling connector
/ shower head size: 270 x 270 mm
/ spray type: PowderRain
/ material spray disc: metal
/ overhead shower removable for cleaning
/ ceiling connection length: 100 mm
/ installation: ceiling mounting
/ connection thread: G ½
/ suitable for continous flow water heaters

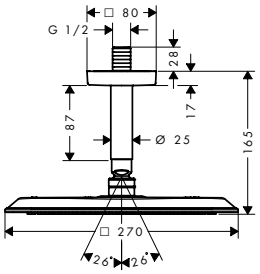

Special feature

EcoSmart

Technologies

Quick Clean

Spray types

Powder Rain

Overview variants

Shower head size	Number of sprays	Spray types	Function from (l/min)	Max. flow rate at 3 bar (l/min)	Min. flow pressure (bar)	Finish	Code no.
270/270	1	PowderRain	6	6.5	1.5	Chrome	28793000
						Brushed Bronze	28793140
						Brushed Black Chrome	28793340
						Matt Black	28793670
						Brushed Nickel	28793820
						Polished Gold Optic	28793990
						AXOR FinishPlus*	28793XXX

Measurements within scale drawings are in mm.
Technical specifications and units of measure are subject to change.

AXOR Citterio C Overhead showers 1jet with ceiling connector

Overview variants

Shower head size	Number of sprays	Spray types	Function from (l/min)	Max. flow rate at 3 bar (l/min)	Min. flow pressure (bar)	Finish	Code no.
270/270	1	PowderRain	7.5	11	1	Chrome	28792000
						Brushed Bronze	28792140
						Brushed Black Chrome	28792340
						Matt Black	28792670
						Brushed Nickel	28792820
						Polished Gold Optic	28792990
						AXOR FinishPlus*	28792XXX

Optional parts:		Finish	Code no.
	AXOR Citterio C Ceiling escutcheon 120/120 softsquare	Chrome	28802000
		Matt Black	28802670
		AXOR FinishPlus*	28802XXX

AXOR Citterio C Overhead showers 1jet ceiling

Features of all variants

/ shower head size: 270 x 270 mm
/ spray type: Rain
/ material spray disc: metal
/ spray disc removable for cleaning
/ installation: ceiling mounting
/ connection type: basic set
/ suitable for continous flow water heaters

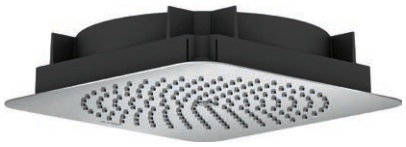

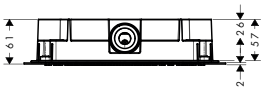

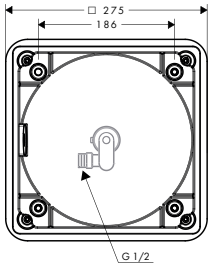

Special feature

Technologies

Spray types

Overview variants

Shower head size	Number of sprays	Spray types	Function from (l/min)	Max. flow rate at 3 bar (l/min)	Min. flow pressure (bar)	Finish	Code no.
270/270	1	Rain	4.3	6.8	1.2	Chrome	28795000
						Brushed Bronze	28795140
						Brushed Black Chrome	28795340
						Matt Black	28795670
						Brushed Nickel	28795820
						Polished Gold Optic	28795990
						AXOR FinishPlus*	28795XXX
270/270	1	Rain	4.1	11.3	1	Chrome	28794000
						Brushed Bronze	28794140
						Brushed Black Chrome	28794340
						Matt Black	28794670
						Brushed Nickel	28794820
						Polished Gold Optic	28794990
						AXOR FinishPlus*	28794XXX

Required parts:		Code no.
	AXOR Citterio C Basic set for overhead shower ceiling	26039180

*AXOR FinishPlus: For further AXOR FinishPlus surfaces please see the AXOR FinishPlus overview on page 44.

AXOR One Overhead shower 75 1jet EcoSmart with shower arm

Features of all variants

/ consists of: overhead shower, shower arm
/ shower head size: 73 mm
/ spray type: PowderRain
/ flow rate PowderRain spray at 3 bar: 8,7 l/min
/ function from: 6,3 l/min
/ maximum flow rate at 3 bar: 8,7 l/min
/ minimum flow pressure: 1 bar
/ projection: 116 mm
/ overhead shower angle adjustable
/ material spray disc: metal
/ overhead shower removable for cleaning
/ shower arm length: 85 mm
/ installation: wall
/ connection thread: G ½
/ connection dimension: DN15
/ suitable for continous flow water heaters

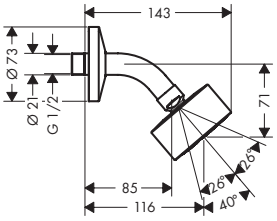

Special feature

EcoSmart

Technologies

Quick Clean

Spray types

Powder Rain

Shower head size	Number of sprays	Spray types	Function from (l/min)	Max. flow rate at 3 bar (l/min)	Min. flow pressure (bar)	Finish	Code no.
75	1	PowderRain	6.3	8.7	1	Chrome	48490000
						Brushed Bronze	48490140
						Brushed Black Chrome	48490340
						Matt Black	48490670
						Matt White	48490700
						Brushed Brass	48490950
						Polished Gold Optic	48490990
						AXOR FinishPlus*	48490XXX

AXOR One Overhead shower 2jet, 1jet with shower arm

Features of all variants

/ consists of: overhead shower, shower arm
/ shower head size: 280 mm
/ material spray disc: metal
/ overhead shower removable for cleaning
/ installation: wall
/ connection dimension: DN15
/ suitable for continous flow water heaters

2 spray types

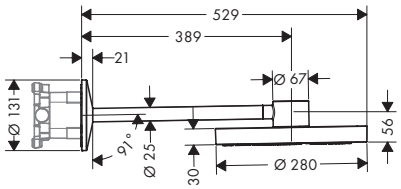

1 spray type

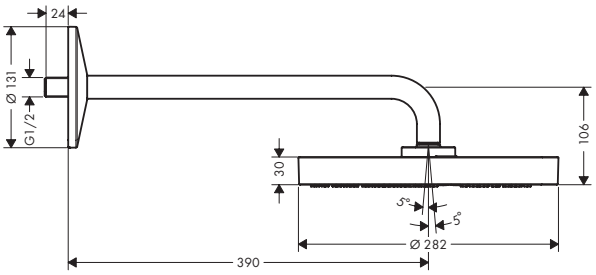

Technologies

Quick Clean

Spray types

Powder Rain

Rain

Measurements within scale drawings are in mm.
Technical specifications and units of measure are subject to change.

AXOR One Overhead shower 2jet, 1jet with shower arm

Overview variants

Shower head size	Number of sprays	Spray types	Function from (l/min)	Max. flow rate at 3 bar (l/min)	Min. flow pressure (bar)	Length shower arm (mm)	Finish	Code no.
280	2	PowderRain, Rain	6.7	12	1.5	389	Chrome	48492000
							Brushed Bronze	48492140
							Brushed Black Chrome	48492340
							Matt Black	48492670
							Matt White	48492700
							Brushed Brass	48492950
							Polished Gold Optic	48492990
							AXOR FinishPlus*	48492XXX
280	1	PowderRain and Rain in combination	8.7	12.3	1.2	390	Chrome	48491000
							Brushed Bronze	48491140
							Brushed Black Chrome	48491340
							Matt Black	48491670
							Matt White	48491700
							Brushed Brass	48491950
							Polished Gold Optic	48491990
							AXOR FinishPlus*	48491XXX

Required parts:	For	Code no.
AXOR ShowerSolutions Basic set for overhead shower with shower arm	48492XXX	35361180

AXOR One Overhead showers 2jet, 1jet with ceiling connector

Features of all variants

/ consists of: overhead shower, ceiling connector
/ shower head size: 280 mm
/ material spray disc: metal
/ overhead shower removable for cleaning
/ metal ceilling connector
/ installation: ceiling mounting
/ connection dimension: DN15
/ suitable for continous flow water heaters

2 spray types

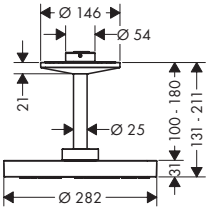

1 spray type

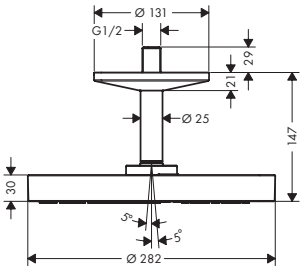

Technologies

Quick Clean

Spray types

Powder Rain

Rain

Overview variants

Shower head size	Number of sprays	Spray types	Function from (l/min)	Max. flow rate at 3 bar (l/min)	Min. flow pressure (bar)	Finish	Code no.
280	2	PowderRain, Rain	1	18	1	Chrome	48494000
						Brushed Bronze	48494140
						Brushed Black Chrome	48494340
						Matt Black	48494670
						Matt White	48494700
						Brushed Brass	48494950
						Polished Gold Optic	48494990
						AXOR FinishPlus*	48494XXX

For more information about this product, please see the next page.

*AXOR FinishPlus: For further AXOR FinishPlus surfaces please see the AXOR FinishPlus overview on page 44.

AXOR One Overhead showers 2jet, 1jet with ceiling connector

Overview variants

Shower head size	Number of sprays	Spray types	Function from (l/min)	Max. flow rate at 3 bar (l/min)	Min. flow pressure (bar)	Finish	Code no.
280	1	PowderRain and Rain in combination	9.2	12.2	1.4	Chrome	48493000
						Brushed Bronze	48493140
						Brushed Black Chrome	48493340
						Matt Black	48493670
						Matt White	48493700
						Brushed Brass	48493950
						Polished Gold Optic	48493990
						AXOR FinishPlus*	48493XXX

Required parts:	For	Code no.
AXOR ShowerSolutions Basic set for overhead shower with ceiling connector	48494XXX	26434180

Optional parts:	For	Finish	Code no.
AXOR One Ceiling connector 300 mm for overhead shower 280 2jet	48494XXX	Chrome	48496000
		Brushed Bronze	48496140
		Brushed Black Chrome	48496340
		Matt Black	48496670
		Matt White	48496700
		Brushed Brass	48496950
		Polished Gold Optic	48496990
		AXOR FinishPlus*	48496XXX
AXOR One Ceiling connector 300 mm for overhead shower 280 1jet	48493XXX	Chrome	48495000
		Brushed Bronze	48495140
		Brushed Black Chrome	48495340
		Matt Black	48495670
		Matt White	48495700
		Brushed Brass	48495950
		Polished Gold Optic	48495990
		AXOR FinishPlus*	48495XXX

AXOR ShowerSolutions Overhead shower 2jet, 1jet with shower arm

Features of all variants

/ consists of: overhead shower, shower arm
/ dynamic spray nozzles move out while using
/ material spray disc: metal
/ overhead shower removable for cleaning
/ ServiceCard with sieve can be removed without tools for cleaning porpose
/ shower arm length: 450 mm
/ installation: wall
/ connection dimension: DN15

300

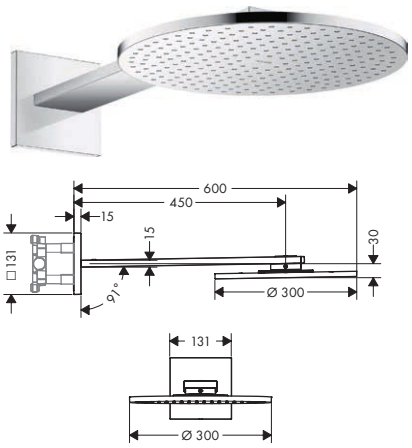

250

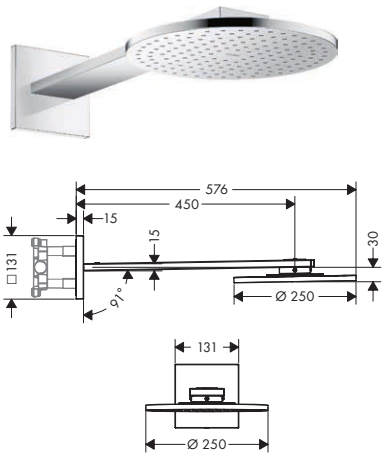

Technologies

Quick Clean

Spray types

Powder Rain

Intense Powder Rain

Measurements within scale drawings are in mm.
Technical specifications and units of measure are subject to change.

AXOR ShowerSolutions Overhead shower 2jet, 1jet with shower arm

Overview variants

Shower head size	Number of sprays	Spray types	Function from (l/min)	Max. flow rate at 3 bar (l/min)	Min. flow pressure (bar)	Connection	Finish	Code no.
300	2	PowderRain, Intense PowderRain	18	27.4	1.7	basic set	Chrome	35303000
							Brushed Bronze	35303140
							Brushed Black Chrome	35303340
							Matt Black	35303670
							Brushed Nickel	35303820
							Polished Gold Optic	35303990
							AXOR FinishPlus*	35303XXX
300	1	PowderRain	14.3	17.6	1.9	G ½	Chrome	35300000
							Brushed Bronze	35300140
							Brushed Black Chrome	35300340
							Matt Black	35300670
							Brushed Nickel	35300820
							Polished Gold Optic	35300990
							AXOR FinishPlus*	35300XXX
250	2	PowderRain, Intense PowderRain	15.5	19.1	2	basic set	Chrome	35296000
							AXOR FinishPlus*	35296XXX
250	1	PowderRain	10.1	18.3	1.2	G ½	Chrome	35284000
							AXOR FinishPlus*	35284XXX

Required parts:		For	Code no.
	AXOR ShowerSolutions Basic set for overhead shower with shower arm	35303XXX 35296XXX	35361180

Optional parts:		Finish	Code no.
	AXOR ShowerSolutions Escutcheon softsquare	Chrome	35214000
		Matt Black	35214670
		AXOR FinishPlus*	35214XXX

AXOR ShowerSolutions Overhead showers 2jet, 1jet with ceiling connector

Features of all variants

/ consists of: overhead shower, ceiling connector
/ dynamic spray nozzles move out while using
/ material spray disc: metal
/ overhead shower removable for cleaning
/ ServiceCard with sieve can be removed without tools for cleaning porpose
/ metal ceilling connector
/ ceiling connection length: 100 mm
/ installation: ceiling mounting
/ connection dimension: DN15
/ connection type: basic set
/ suitable for continous flow water heaters

300

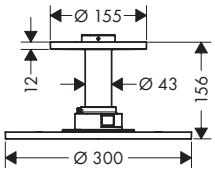

250

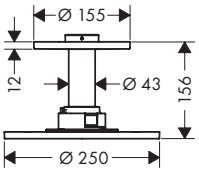

Technologies

Spray types

For more information about this product, please see the next page.

*AXOR FinishPlus: For further AXOR FinishPlus surfaces please see the AXOR FinishPlus overview on page 44.

AXOR ShowerSolutions Overhead showers 2jet, 1jet with ceiling connector

Overview variants

Shower head size	Number of sprays	Spray types	Function from (l/min)	Max. flow rate at 3 bar (l/min)	Min. flow pressure (bar)	Finish	Code no.
300	1	PowderRain	14.6	19	1.8	Chrome	35301000
						Brushed Bronze	35301140
						Brushed Black Chrome	35301340
						Matt Black	35301670
						Brushed Nickel	35301820
						Polished Gold Optic	35301990
						AXOR FinishPlus*	35301XXX
300	2	PowderRain, Intense PowderRain	14.5	18	2.2	Chrome	35304000
						Brushed Bronze	35304140
						Brushed Black Chrome	35304340
						Matt Black	35304670
						Brushed Nickel	35304820
						Polished Gold Optic	35304990
						AXOR FinishPlus*	35304XXX
250	1	PowderRain	10.9	19	1.8	Chrome	35286000
						AXOR FinishPlus*	35286XXX
250	2	PowderRain, Intense PowderRain	14.5	18	1.7	Chrome	35297000
						AXOR FinishPlus*	35297XXX

Required parts:		Code no.
	AXOR ShowerSolutions Basic set for overhead shower with ceiling connector	26434180

Optional parts:		Finish	Code no.
	AXOR ShowerSolutions Extension 230 mm for ceiling connector overhead shower	Chrome	35288000
		AXOR FinishPlus*	35288XXX

AXOR ShowerSolutions Overhead showers 2jet, 1jet ceiling

Features of all variants

/ dynamic spray nozzles move out while using
/ material spray disc: metal
/ overhead shower removable for cleaning
/ installation: flush with the ceiling
/ connection dimension: DN15
/ suitable for continous flow water heaters

300

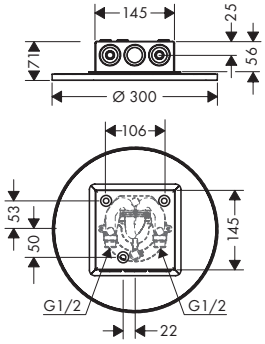

250

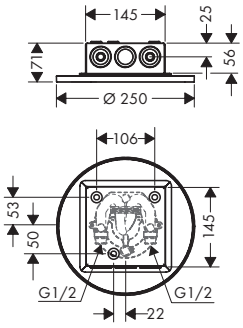

Technologies

Spray types

Measurements within scale drawings are in mm.
Technical specifications and units of measure are subject to change.

AXOR ShowerSolutions Overhead showers 2jet, 1jet ceiling

Overview variants

Shower head size	Number of sprays	Spray types	Function from (l/min)	Max. flow rate at 3 bar (l/min)	Min. flow pressure (bar)	Connection	Finish	Code no.
300	2	PowderRain, Intense PowderRain	11	17	1.5	basic set	Chrome	35305000
							Brushed Bronze	35305140
							Brushed Black Chrome	35305340
							Matt Black	35305670
							Brushed Nickel	35305820
							Polished Gold Optic	35305990
							AXOR FinishPlus*	35305XXX
300	1	PowderRain	15.4	18.1	1.8	G ½	Chrome	35302000
							Brushed Bronze	35302140
							Brushed Black Chrome	35302340
							Matt Black	35302670
							Brushed Nickel	35302820
							Polished Gold Optic	35302990
							AXOR FinishPlus*	35302XXX
250	2	PowderRain, Intense PowderRain	8.8	21	1.5	basic set	Chrome	35298000
							AXOR FinishPlus*	35298XXX
250	1	PowderRain	12.5	17.7	1.5	G ½	Chrome	35287000
							AXOR FinishPlus*	35287XXX

Required parts:	Code no.
AXOR ShowerSolutions Basic set for overhead shower ceiling	35363180

AXOR ShowerSolutions Overhead shower 2jet, 1jet with shower arm

Features of all variants

/ consists of: overhead shower, shower arm
/ dynamic spray nozzles move out while using
/ material spray disc: metal
/ overhead shower removable for cleaning
/ ServiceCard with sieve can be removed without tools for cleaning porpose
/ shower arm length: 450 mm
/ installation: wall
/ connection dimension: DN15
/ suitable for continous flow water heaters

300/300

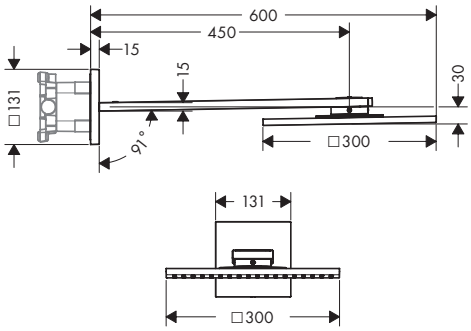

250/250

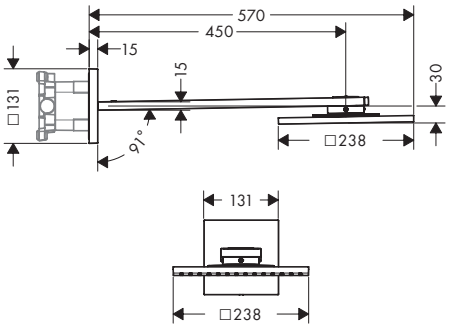

Technologies

Quick Clean

Spray types

Powder Rain
Intense Powder Rain

Certificates/declarations

EPD

For more information about this product, please see the next page.

*AXOR FinishPlus: For further AXOR FinishPlus surfaces please see the AXOR FinishPlus overview on page 44.

AXOR ShowerSolutions Overhead shower 2jet, 1jet with shower arm

Overview variants

Shower head size	Number of sprays	Spray types	Function from (l/min)	Max. flow rate at 3 bar (l/min)	Min. flow pressure (bar)	Connection	Finish	Code no.
300/300	2	PowderRain, Intense PowderRain	15.2	27.4	2	basic set	Chrome	35318000
							Brushed Bronze	35318140
							Brushed Black Chrome	35318340
							Brushed Nickel	35318820
							Polished Gold Optic	35318990
							AXOR FinishPlus*	35318XXX
300/300	1	PowderRain	13.5	18.2	2	G ½	Chrome	35314000
							Brushed Bronze	35314140
							Brushed Black Chrome	35314340
							Brushed Nickel	35314820
							Polished Gold Optic	35314990
							AXOR FinishPlus*	35314XXX
250/250	2	PowderRain, Intense PowderRain	9.8	19	2	basic set	Chrome	35310000
							AXOR FinishPlus*	35310XXX
250/250	1	PowderRain	12.8	17	1.8	G ½	Chrome	35306000
							AXOR FinishPlus*	35306XXX

Required parts:	For	Code no.
AXOR ShowerSolutions Basic set for overhead shower with shower arm	35318XXX 35310XXX	35361180

Optional parts:	Finish	Code no.
AXOR ShowerSolutions Escutcheon softsquare	Chrome	35214000
	AXOR FinishPlus*	35214XXX

AXOR ShowerSolutions Overhead showers 2jet, 1jet with ceiling connector

Features of all variants

/ consists of: overhead shower, ceiling connector
/ dynamic spray nozzles move out while using
/ material spray disc: metal
/ overhead shower removable for cleaning
/ ServiceCard with sieve can be removed without tools for cleaning porpose
/ metal ceilling connector
/ ceiling connection length: 100 mm
/ installation: ceiling mounting
/ connection dimension: DN15
/ connection type: basic set
/ suitable for continous flow water heaters

300/300

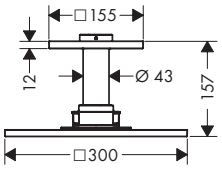

250/250

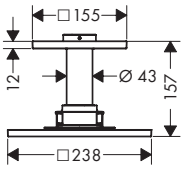

Technologies

Spray types

Measurements within scale drawings are in mm.
Technical specifications and units of measure are subject to change.

AXOR ShowerSolutions Overhead showers 2jet, 1jet with ceiling connector

Overview variants

Shower head size	Number of sprays	Spray types	Function from (l/min)	Max. flow rate at 3 bar (l/min)	Min. flow pressure (bar)	Finish	Code no.
300/300	2	PowderRain, Intense PowderRain	14.5	27	1.7	Chrome	35320000
						Brushed Bronze	35320140
						Brushed Black Chrome	35320340
						Brushed Nickel	35320820
						Polished Gold Optic	35320990
						AXOR FinishPlus*	35320XXX
300/300	1	PowderRain	14	19	1.8	Chrome	35316000
						Brushed Bronze	35316140
						Brushed Black Chrome	35316340
						Brushed Nickel	35316820
						Polished Gold Optic	35316990
						AXOR FinishPlus*	35316XXX
250/250	2	PowderRain, Intense PowderRain	11.2	18	2.2	Chrome	35312000
						AXOR FinishPlus*	35312XXX
250/250	1	PowderRain	10.9	19	1.8	Chrome	35308000
						AXOR FinishPlus*	35308XXX

Required parts:	Code no.
AXOR ShowerSolutions Basic set for overhead shower with ceiling connector	26434180

Optional parts:	Finish	Code no.
AXOR ShowerSolutions Extension 230 mm for ceiling connector overhead shower	Chrome	35288000
	AXOR FinishPlus*	35288XXX

AXOR ShowerSolutions Overhead showers 2jet, 1jet ceiling

Features of all variants

/ dynamic spray nozzles move out while using
/ material spray disc: metal
/ overhead shower removable for cleaning
/ installation: flush with the ceiling
/ connection dimension: DN15
/ connection type: basic set
/ suitable for continous flow water heaters

300/300

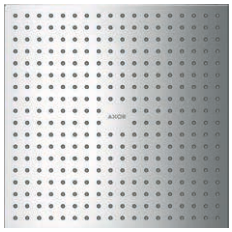

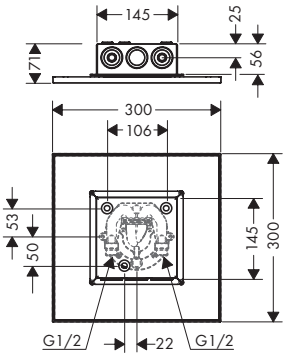

250/250

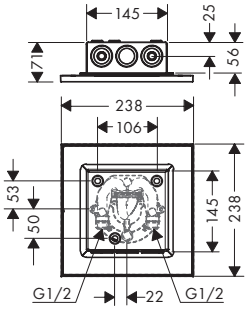

Technologies

Spray types

For more information about this product, please see the next page.

*AXOR FinishPlus: For further AXOR FinishPlus surfaces please see the AXOR FinishPlus overview on page 44.

AXOR ShowerSolutions Overhead showers 2jet, 1jet ceiling

Overview variants

Shower head size	Number of sprays	Spray types	Function from (l/min)	Max. flow rate at 3 bar (l/min)	Min. flow pressure (bar)	Finish	Code no.
300/300	1	PowderRain	15.4	18.1	1.8	Chrome	35317000
						Brushed Bronze	35317140
						Brushed Black Chrome	35317340
						Brushed Nickel	35317820
						Polished Gold Optic	35317990
						AXOR FinishPlus*	35317XXX
300/300	2	PowderRain, Intense PowderRain	11	17	1.5	Chrome	35321000
						Brushed Bronze	35321140
						Brushed Black Chrome	35321340
						Brushed Nickel	35321820
						Polished Gold Optic	35321990
						AXOR FinishPlus*	35321XXX
250/250	1	PowderRain	10.4	17.6	1.3	Chrome	35309000
						AXOR FinishPlus*	35309XXX
250/250	2	PowderRain, Intense PowderRain	9	17	1.5	Chrome	35313000
						AXOR FinishPlus*	35313XXX

Required parts:		Code no.
	AXOR ShowerSolutions Basic set for overhead shower ceiling	35363180

AXOR ShowerSolutions Overhead shower 250/580 3jet

Features of all variants

/ consists of: overhead shower, wall outlet
/ shower head size: 580 x 260 mm
/ spray type: Rain, RainFlow, MonoRain
/ flow rate Rain spray at 3 bar: 19,5 l/min
/ flow rate MonoRain spray at 3 bar: 22 l/min
/ flow rate RainFlow spray at 3 bar: 18,5 l/min
/ function from: 12 l/min
/ maximum flow rate at 3 bar: 22 l/min
/ minimum flow pressure: 1,7 bar
/ material spray disc: metal
/ spray disc removable for cleaning
/ installation: wall
/ connection dimension: DN15
/ connection type: basic set
/ suitable for continous flow water heaters

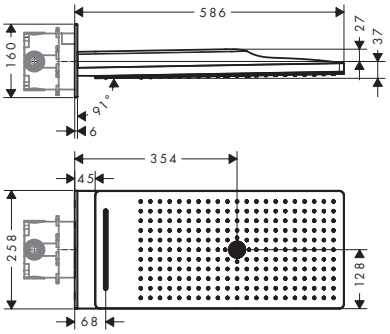

Technologies

Spray types

Shower head size	Number of sprays	Spray types	Function from (l/min)	Max. flow rate at 3 bar (l/min)	Min. flow pressure (bar)	Finish	Code no.
250/580	3	Rain, RainFlow, MonoRain	12	22	1.5	Chrome	35283000
						AXOR FinishPlus*	35283XXX

Required parts (choose one):			Code no.
Option 1		AXOR iBox universal 2 Basic set	01400180
+		Adapter plate for iBox universal 2	13588000
Option 2		AXOR iBox universal Basic set	01700180

Measurements within scale drawings are in mm.
Technical specifications and units of measure are subject to change.

AXOR ShowerSolutions Overhead shower 3jet, 1jet with shower arm

Features of all variants

/ consists of: overhead shower, shower arm, escutcheon
/ minimum flow pressure: 1,5 bar
/ material spray disc: metal
/ spray disc removable for cleaning
/ overhead shower removable for cleaning
/ shower arm length: 460 mm
/ connection dimension: DN15
/ suitable for continous flow water heaters

3 spray types

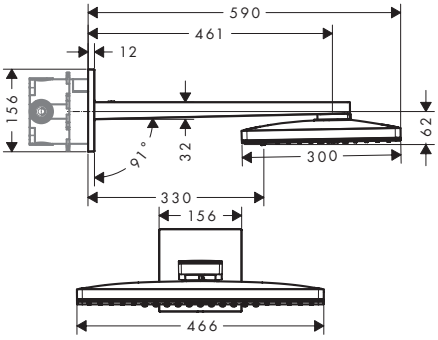

1 spray type

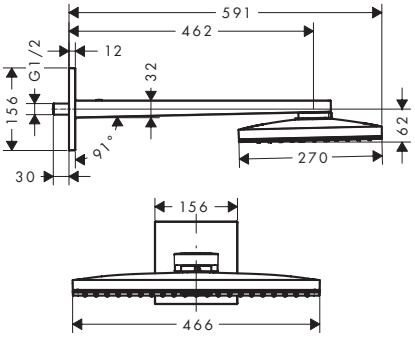

Technologies

Spray types

Overview variants

Shower head size	Number of sprays	Spray types	Function from (l/min)	Max. flow rate at 3 bar (l/min)	Min. flow pressure (bar)	Escutcheon	Finish	Code no.
460/300	3	Rain, RainStream, MonoRain	11	18	1.5	square	Chrome	35282000
							AXOR FinishPlus*	35282XXX
460/300	3	Rain, RainStream, MonoRain	11	18	1.5	softsquare	Chrome	35276000
							AXOR FinishPlus*	35276XXX
460/270	1	Rain	12	19	1.5	square	Chrome	35278000
							AXOR FinishPlus*	35278XXX
460/270	1	Rain	12	19	1.5	softsquare	Chrome	35274000
							AXOR FinishPlus*	35274XXX

Required parts (choose one):			For	Code no.
Option 1		AXOR iBox universal 2 Basic set	35282XXX 35276XXX	01400180
+		Adapter plate for iBox universal 2	35282XXX 35276XXX	13588000
Option 2		AXOR iBox universal Basic set	35282XXX 35276XXX	01700180

*AXOR FinishPlus: For further AXOR FinishPlus surfaces please see the AXOR FinishPlus overview on page 44.

AXOR ShowerSolutions Overhead showers 3jet,1jet with ceiling connector

Features of all variants

/ consists of: overhead shower, ceiling connector
/ minimum flow pressure: 1,5 bar
/ material spray disc: metal
/ spray disc removable for cleaning
/ overhead shower removable for cleaning
/ metal ceilling connector
/ ceiling connection length: 100 mm
/ installation: ceiling mounting
/ connection dimension: DN15
/ connection type: basic set
/ suitable for continous flow water heaters

3 spray types

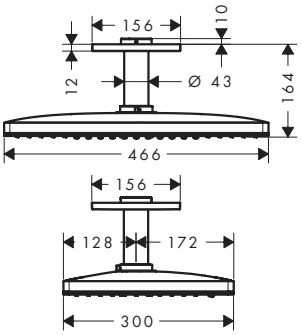

1 spray type

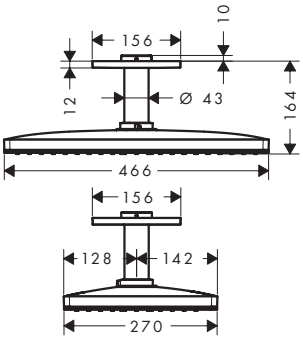

Technologies

Quick Clean

Spray types

Rain | Mono Rain | Rain Stream

Overview variants

Shower head size	Number of sprays	Spray types	Function from (l/min)	Max. flow rate at 3 bar (l/min)	Min. flow pressure (bar)	Finish	Code no.
460/300	3	Rain, RainStream, MonoRain	14.3	23	1.5	Chrome	35281000
						AXOR FinishPlus*	35281XXX
460/300	1	Rain	12	21	1.5	Chrome	35277000
						AXOR FinishPlus*	35277XXX

Required parts:	Code no.
AXOR ShowerSolutions Basic set for overhead shower with ceiling connector	26434180

Optional parts:	Finish	Code no.
AXOR ShowerSolutions Extension 230 mm for ceiling connector overhead shower	Chrome	35288000
	AXOR FinishPlus*	35288XXX

AXOR ShowerSolutions Overhead shower 350 1jet with shower arm

Features of all variants

/ consists of: overhead shower, shower arm
/ shower head size: 350 mm
/ spray type: PowderRain
/ flow rate PowderRain spray at 3 bar: 24,6 l/min
/ function from: 13,5 l/min
/ maximum flow rate at 3 bar: 24,6 l/min
/ minimum flow pressure: 1 bar
/ overhead shower angle adjustable
/ material spray disc: metal
/ overhead shower removable for cleaning
/ shower arm length: 390 mm
/ installation: wall
/ connection thread: G ½
/ connection dimension: DN15
/ suitable for continous flow water heaters

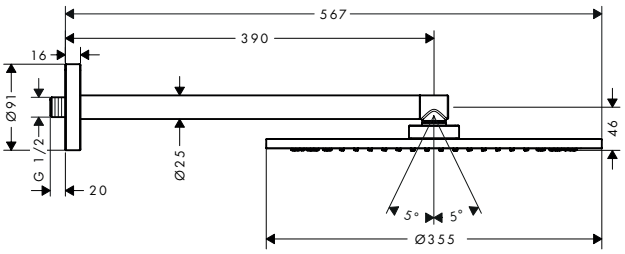

Technologies

Quick Clean

Spray types

Powder Rain

Measurements within scale drawings are in mm.
Technical specifications and units of measure are subject to change.

AXOR ShowerSolutions Overhead shower 350 1jet with shower arm

Shower head size	Number of sprays	Spray types	Function from (l/min)	Max. flow rate at 3 bar (l/min)	Min. flow pressure (bar)	Finish	Code no.
350	1	PowderRain	13.5	24.6	1	Chrome	26034000
						Brushed Nickel	26034820
						AXOR FinishPlus*	26034XXX

AXOR ShowerSolutions Overhead shower 350 1jet with ceiling connection

Features of all variants

/ consists of: overhead shower, ceiling connector
/ shower head size: 350 mm
/ spray type: PowderRain
/ flow rate PowderRain spray at 3 bar: 26 l/min
/ function from: 13,5 l/min
/ maximum flow rate at 3 bar: 24,6 l/min
/ minimum flow pressure: 1 bar
/ overhead shower angle adjustable
/ material spray disc: metal
/ overhead shower removable for cleaning
/ metal ceilling connector
/ ceiling connection length: 100 mm
/ installation: ceiling mounting
/ connection thread: G ½
/ connection dimension: DN15
/ suitable for continous flow water heaters

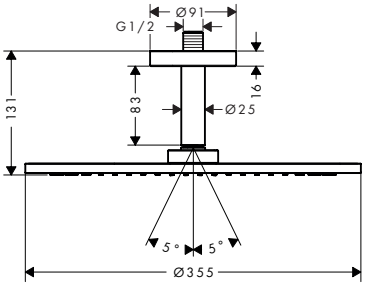

Technologies

Quick Clean

Spray types

Powder Rain

Shower head size	Number of sprays	Spray types	Function from (l/min)	Max. flow rate at 3 bar (l/min)	Min. flow pressure (bar)	Finish	Code no.
350	1	PowderRain	13.5	24.6	1	Chrome	26035000
						Brushed Nickel	26035820
						AXOR FinishPlus*	26035XXX

AXOR ShowerSolutions Overhead shower 240/240 1jet ceiling integrated

Features of all variants

/ shower head size: 240 x 240 mm
/ spray type: RainAir
/ flow rate RainAir spray at 3 bar: 12 l/min
/ function from: 10,5 l/min
/ maximum flow rate at 3 bar: 12 l/min
/ flow rate expansible to 25 l/min
/ minimum flow pressure: 2 bar
/ material spray disc: metal
/ spray disc removable for cleaning
/ installation: flush with the ceiling
/ connection thread: G ½
/ connection dimension: DN15
/ suitable for continous flow water heaters

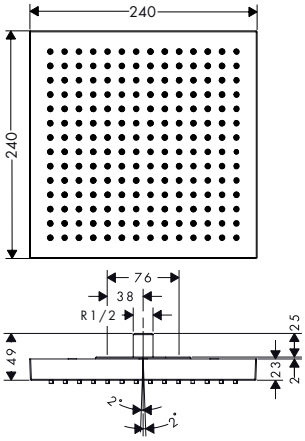

Technologies

AirPower

Quick Clean

Spray types

RainAir

Certificates/declarations

EPD

Shower head size	Number of sprays	Spray types	Function from (l/min)	Max. flow rate at 3 bar (l/min)	Min. flow pressure (bar)	Finish	Code no.
240/240	1	RainAir	10.5	12	2	Chrome	10924000
						AXOR FinishPlus*	10924XXX

*AXOR FinishPlus: For further AXOR FinishPlus surfaces please see the AXOR FinishPlus overview on page 44.

AXOR ShowerSolutions Overhead shower 240/240 1jet with ceiling connection

Features of all variants

/ consists of: overhead shower, ceiling connector
/ shower head size: 240 x 240 mm
/ spray type: RainAir
/ flow rate RainAir spray at 3 bar: 12 l/min
/ function from: 10,5 l/min
/ maximum flow rate at 3 bar: 12 l/min
/ minimum flow pressure: 2 bar
/ material spray disc: metal
/ spray disc removable for cleaning
/ metal ceilling connector
/ ceiling connection length: 102 mm
/ installation: ceiling mounting
/ connection thread: G ½
/ connection dimension: DN15
/ suitable for continous flow water heaters

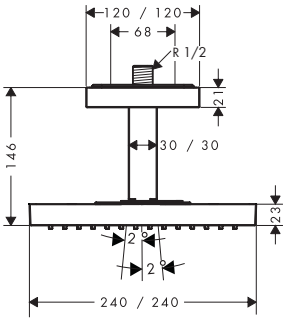

Technologies

Spray types

Shower head size	Number of sprays	Spray types	Function from (l/min)	Max. flow rate at 3 bar (l/min)	Min. flow pressure (bar)	Finish	Code no.
240/240	1	RainAir	10.5	12	2	Chrome	10929000
						AXOR FinishPlus*	10929XXX

AXOR ShowerSolutions Overhead shower 240/240 1jet with shower arm

Features of all variants

/ consists of: overhead shower, shower arm, escutcheon
/ shower head size: 240 x 240 mm
/ spray type: RainAir
/ flow rate RainAir spray at 3 bar: 12 l/min
/ function from: 11 l/min
/ maximum flow rate at 3 bar: 11,5 l/min
/ minimum flow pressure: 2 bar
/ material spray disc: metal
/ spray disc removable for cleaning
/ shower arm length: 458 mm
/ metal shower arm
/ installation: wall
/ connection dimension: DN15
/ suitable for continous flow water heaters

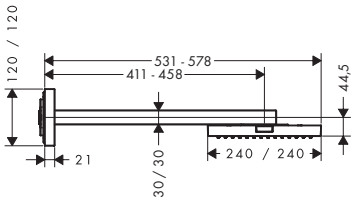

Technologies

Spray types

Shower head size	Number of sprays	Spray types	Function from (l/min)	Max. flow rate at 3 bar (l/min)	Min. flow pressure (bar)	Finish	Code no.
240/240	1	RainAir	11	11.5	2	Chrome	10925000
						Brushed Black Chrome	10925340
						AXOR FinishPlus*	10925XXX

Required parts:	Code no.
AXOR ShowerSolutions Basic set for overhead shower 240/240 1jet with shower arm	10921180

Measurements within scale drawings are in mm.
Technical specifications and units of measure are subject to change.

AXOR ShowerSolutions Flood spout 240/120 for concealed installation

Features of all variants

/ 1 function
/ projection: 180 mm
/ wall-mounted
/ maximum flow rate at 3 bar: 19 l/min
/ connection dimension: DN20
/ when positioning the spout between waterconducting parts (no.10751000, no.10755000, no.10972000, no.10651000, no.28491000, no.40872000, no.40873000) in joined installation (10 mm distance) it is recommended to use basic set no.10941180
/ can be used as bath spout or flood shower
/ spray type: RainFlow

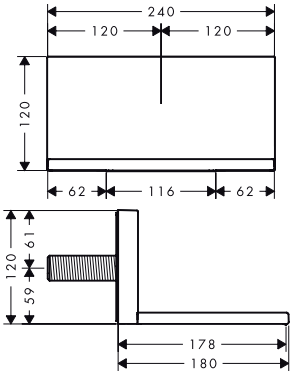

Technologies

Quick Clean

Spray types

RainFlow

Spray types	Max. flow rate at 3 bar (l/min)	Finish	Code no.
RainFlow	19	Chrome	10942000
		AXOR FinishPlus*	10942XXX

Optional parts:	Code no.
AXOR ShowerSolutions Basic set for flood spout 240/120 for concealed installation	10941180

AXOR LampShower/Nendo LampShower 275 1jet with ceiling connector

Features of all variants

/ consists of: overhead shower, ceiling connector
/ shower head size: 275 mm
/ spray type: Rain
/ flow rate Rain spray at 3 bar: 18 l/min
/ function from: 12 l/min
/ maximum flow rate at 3 bar: 18 l/min
/ minimum flow pressure: 2 bar
/ spray zones: special spray image from placed inside spray nozzles on the inner diameter
/ overhead shower angle adjustable
/ material spray disc: metal
/ spray disc removable for cleaning
/ metal ceilling connector
/ ceiling connection length: 120 mm
/ installation: ceiling mounting
/ connection thread: G ½
/ connection dimension: DN15
/ with integrated lighting
/ illuminant: LED
/ power supply: 12 V
/ transformer power supply for concealed installation 12 V, 18 W
/ input voltage: 100 – 240 V AC / 50 / 60 Hz
/ output voltage: 12 V DC
/ colour temperature: 2700 K
/ energy efficiency class: contains a light source of energy efficiency class G
/ not suitable for continuous flow water heaters
/ IP degree of protection: IPX5

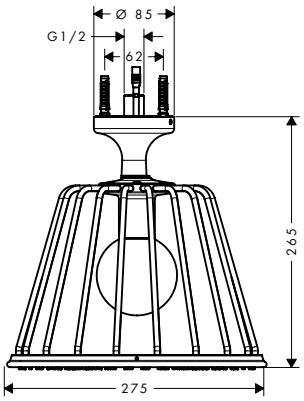

Technologies

Quick Clean

Spray types

Rain

Shower head size	Number of sprays	Spray types	Function from (l/min)	Max. flow rate at 3 bar (l/min)	Min. flow pressure (bar)	Finish	Code no.
275	1	Rain	12	18	2	Chrome	26032000
						AXOR FinishPlus*	26032XXX

*AXOR FinishPlus: For further AXOR FinishPlus surfaces please see the AXOR FinishPlus overview on page 44.

AXOR LampShower/Nendo LampShower 275 1jet with shower arm

Features of all variants

/ consists of: overhead shower, shower arm
/ shower head size: 275 mm
/ spray type: Rain
/ flow rate Rain spray at 3 bar: 13,5 l/min
/ function from: 10 l/min
/ maximum flow rate at 3 bar: 13 l/min
/ minimum flow pressure: 2 bar
/ spray zones: special spray image from placed inside spray nozzles on the inner diameter
/ overhead shower angle adjustable
/ material spray disc: metal
/ spray disc removable for cleaning
/ shower arm length: 380 mm
/ shower arm swivels by 150°
/ installation: wall
/ connection thread: G ½
/ connection dimension: DN15
/ with integrated lighting
/ illuminant: LED
/ power supply: 12 V
/ transformer power supply for concealed installation 12 V, 18 W
/ input voltage: 100 – 240 V AC / 50 / 60 Hz
/ output voltage: 12 V DC
/ colour temperature: 2700 K
/ energy efficiency class: contains a light source of energy efficiency class G
/ not suitable for continuous flow water heaters
/ IP degree of protection: IPX5

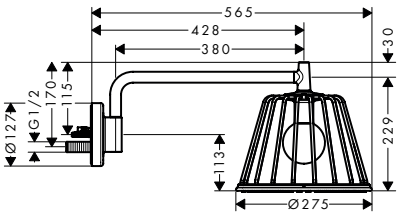

Technologies

Spray types

Shower head size	Number of sprays	Spray types	Function from (l/min)	Max. flow rate at 3 bar (l/min)	Min. flow pressure (bar)	Finish	Code no.
275	1	Rain	10	13	2	Chrome	26031000
						AXOR FinishPlus*	26031XXX

Optional parts:	Code no.
AXOR Showers/Front Basic set for LampShower 275 1jet with shower arm and overhead shower 240 2jet with shower arm	26909180

AXOR Showers/Front Overhead shower 240 2jet with ceiling connector

Features of all variants

/ consists of: overhead shower, ceiling connector
/ shower head size: 279 mm
/ spray type: Rain, RainAir
/ flow rate Rain spray at 3 bar: 17 l/min
/ flow rate RainAir spray at 3 bar: 16 l/min
/ function from: 9,2 l/min
/ maximum flow rate at 3 bar: 17 l/min
/ minimum flow pressure: 1 bar
/ Select button on overhead shower
/ overhead shower angle adjustable
/ material spray disc: metal
/ spray disc removable for cleaning
/ metal ceilling connector
/ ceiling connection length: 139 mm
/ installation: ceiling mounting
/ connection thread: G ½
/ connection dimension: DN15
/ suitable for continous flow water heaters

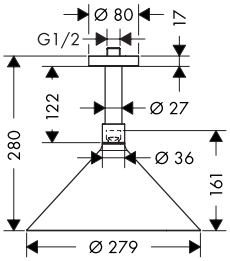

Technologies

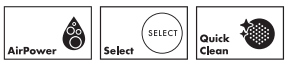

Spray types

Shower head size	Number of sprays	Spray types	Function from (l/min)	Max. flow rate at 3 bar (l/min)	Min. flow pressure (bar)	Finish	Code no.
240	2	Rain, RainAir	9.2	17	1	Chrome	26022000
						AXOR FinishPlus*	26022XXX

Measurements within scale drawings are in mm.
Technical specifications and units of measure are subject to change.

AXOR Showers/Front Overhead shower 240 2jet with shower arm

Features of all variants

/ consists of: overhead shower, shower arm
/ shower head size: 279 mm
/ spray type: Rain, RainAir
/ flow rate Rain spray at 3 bar: 15 l/min
/ flow rate RainAir spray at 3 bar: 15 l/min
/ function from: 8 l/min
/ maximum flow rate at 3 bar: 15 l/min
/ minimum flow pressure: 1 bar
/ Select button on overhead shower
/ overhead shower angle adjustable
/ material spray disc: metal
/ spray disc removable for cleaning
/ shower arm length: 400 mm
/ shower arm swivels by 150°
/ installation: wall
/ connection thread: G ½
/ connection dimension: DN15
/ suitable for continous flow water heaters

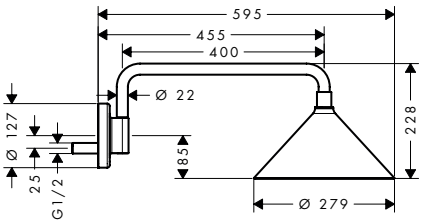

Technologies

Spray types

Shower head size	Number of sprays	Spray types	Function from (l/min)	Max. flow rate at 3 bar (l/min)	Min. flow pressure (bar)	Finish	Code no.
240	2	Rain, RainAir	8	15	1	Chrome	26021000
						AXOR FinishPlus*	26021XXX

Optional parts:		Code no.
	AXOR Showers/Front Basic set for LampShower 275 1jet with shower arm and overhead shower 240 2jet with shower arm	26909180

AXOR ShowerSolutions Overhead showers 1jet

Features of all variants

/ shower head size: 245 x 185 mm
/ spray type: Rain
/ overhead shower angle adjustable
/ material spray disc: metal
/ overhead shower removable for cleaning
/ installation: ceiling or wall
/ connection thread: G ½
/ suitable for continous flow water heaters

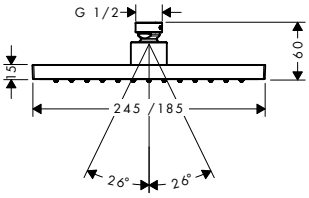

Special feature

Technologies

Spray types

Overview variants

Shower head size	Number of sprays	Spray types	Function from (l/min)	Max. flow rate at 3 bar (l/min)	Min. flow pressure (bar)	Finish	Code no.
245/185	1	Rain	5.6	7.4	0.8	Chrome	35374000
						Brushed Black Chrome	35374340
						Matt Black	35374670
						AXOR FinishPlus*	35374XXX
245/185	1	Rain	2.6	5.2	0.6	Chrome	35387000
						Brushed Black Chrome	35387340
						Matt Black	35387670
						AXOR FinishPlus*	35387XXX
245/185	1	Rain	6.2	10.1	0.8	Chrome	35373000
						Brushed Black Chrome	35373340
						Matt Black	35373670
						AXOR FinishPlus*	35373XXX

For more information about this product, please see the next page.

*AXOR FinishPlus: For further AXOR FinishPlus surfaces please see the AXOR FinishPlus overview on page 44.

AXOR ShowerSolutions Overhead showers 1jet

Required parts (choose one):		Finish	Code no.
	AXOR ShowerSolutions Shower arm 390 mm square	Chrome	26436000
		Brushed Black Chrome	26436340
		Matt Black	26436670
		AXOR FinishPlus*	26436XXX
	AXOR ShowerSolutions Ceiling connector 100 mm square	Chrome	26437000
		Brushed Black Chrome	26437340
		Matt Black	26437670
		AXOR FinishPlus*	26437XXX
	AXOR ShowerSolutions Ceiling connector 300 mm square	Chrome	26438000
		Brushed Black Chrome	26438340
		Matt Black	26438670
		AXOR FinishPlus*	26438XXX
	AXOR ShowerSolutions Shower arm 390 mm softsquare	Chrome	26967000
		Brushed Black Chrome	26967340
		Matt Black	26967670
		AXOR FinishPlus*	26967XXX
	AXOR ShowerSolutions Ceiling connector 100 mm softsquare	Chrome	26965000
		Brushed Black Chrome	26965340
		Matt Black	26965670
		AXOR FinishPlus*	26965XXX
	AXOR ShowerSolutions Ceiling connector 300 mm softsquare	Chrome	26966000
		Brushed Black Chrome	26966340
		Matt Black	26966670
		AXOR FinishPlus*	26966XXX

AXOR ShowerSolutions Overhead showers 1jet

Features of all variants

/ shower head size: 220 mm
/ spray type: Rain
/ overhead shower angle adjustable
/ material spray disc: metal
/ overhead shower removable for cleaning
/ installation: ceiling or wall
/ connection thread: G ½
/ suitable for continous flow water heaters

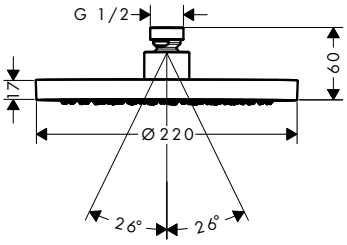

Special feature

Eco Smart+ EcoSmart

Technologies

Quick Clean

Spray types

Rain

Overview variants

Shower head size	Number of sprays	Spray types	Function from (l/min)	Max. flow rate at 3 bar (l/min)	Min. flow pressure (bar)	Finish	Code no.
220	1	Rain	5.6	7.4	0.8	Chrome	35383000
						Brushed Black Chrome	35383340
						Matt Black	35383670
						AXOR FinishPlus*	35383XXX

Measurements within scale drawings are in mm.
Technical specifications and units of measure are subject to change.

AXOR ShowerSolutions Overhead showers 1jet

Overview variants

Shower head size	Number of sprays	Spray types	Function from (l/min)	Max. flow rate at 3 bar (l/min)	Min. flow pressure (bar)	Finish	Code no.
220	1	Rain	2.6	5.6	0.6	Chrome	35388000
						Brushed Black Chrome	35388340
						Matt Black	35388670
						AXOR FinishPlus*	35388XXX
220	1	Rain	6.2	10.1	0.8	Chrome	35382000
						Brushed Black Chrome	35382340
						Matt Black	35382670
						AXOR FinishPlus*	35382XXX

Required parts (choose one):		Finish	Code no.
	AXOR ShowerSolutions Shower arm 390 mm	Chrome	26431000
		Brushed Black Chrome	26431340
		Matt Black	26431670
		AXOR FinishPlus*	26431XXX
	AXOR ShowerSolutions Ceiling connector 100 mm	Chrome	26432000
		Brushed Black Chrome	26432340
		Matt Black	26432670
		AXOR FinishPlus*	26432XXX
	AXOR ShowerSolutions Ceiling connector 300 mm	Chrome	26433000
		Brushed Black Chrome	26433340
		Matt Black	26433670
		AXOR FinishPlus*	26433XXX
	AXOR ShowerSolutions Shower arm 390 mm softsquare	Chrome	26967000
		Brushed Black Chrome	26967340
		Matt Black	26967670
		AXOR FinishPlus*	26967XXX
	AXOR ShowerSolutions Ceiling connector 100 mm softsquare	Chrome	26965000
		Brushed Black Chrome	26965340
		Matt Black	26965670
		AXOR FinishPlus*	26965XXX
	AXOR ShowerSolutions Ceiling connector 300 mm softsquare	Chrome	26966000
		Brushed Black Chrome	26966340
		Matt Black	26966670
		AXOR FinishPlus*	26966XXX

*AXOR FinishPlus: For further AXOR FinishPlus surfaces please see the AXOR FinishPlus overview on page 44.

AXOR ShowerSolutions Overhead showers 1jet

Features of all variants

/ shower head size: 245 mm
/ spray type: Rain
/ overhead shower angle adjustable
/ material spray disc: metal
/ overhead shower removable for cleaning
/ installation: ceiling or wall
/ connection thread: G ½
/ suitable for continous flow water heaters

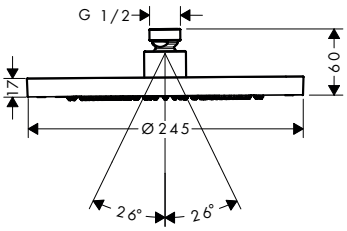

Special feature

Technologies

Spray types

Overview variants

Shower head size	Number of sprays	Spray types	Function from (l/min)	Max. flow rate at 3 bar (l/min)	Min. flow pressure (bar)	Finish	Code no.
245	1	Rain	5.6	9	0.8	Chrome	35381000
						Brushed Black Chrome	35381340
						Matt Black	35381670
						AXOR FinishPlus*	35381XXX
245	1	Rain	2.6	5.2	0.6	Chrome	35389000
						Brushed Black Chrome	35389340
						Matt Black	35389670
						AXOR FinishPlus*	35389XXX
245	1	Rain	6.2	10.1	0.8	Chrome	35380000
						Brushed Black Chrome	35380340
						Matt Black	35380670
						AXOR FinishPlus*	35380XXX

Required parts (choose one):	Finish	Code no.
AXOR ShowerSolutions Shower arm 390 mm	Chrome	26431000
	Brushed Black Chrome	26431340
	Matt Black	26431670
	AXOR FinishPlus*	26431XXX
AXOR ShowerSolutions Ceiling connector 100 mm	Chrome	26432000
	Brushed Black Chrome	26432340
	Matt Black	26432670
	AXOR FinishPlus*	26432XXX
AXOR ShowerSolutions Ceiling connector 300 mm	Chrome	26433000
	Brushed Black Chrome	26433340
	Matt Black	26433670
	AXOR FinishPlus*	26433XXX
AXOR ShowerSolutions Shower arm 390 mm softsquare	Chrome	26967000
	Brushed Black Chrome	26967340
	Matt Black	26967670
	AXOR FinishPlus*	26967XXX

Measurements within scale drawings are in mm.
Technical specifications and units of measure are subject to change.

AXOR ShowerSolutions Overhead showers 1jet

Required parts (choose one):		Finish	Code no.
	AXOR ShowerSolutions Ceiling connector 100 mm softsquare	Chrome	26965000
		Brushed Black Chrome	26965340
		Matt Black	26965670
		AXOR FinishPlus*	26965XXX
	AXOR ShowerSolutions Ceiling connector 300 mm softsquare	Chrome	26966000
		Brushed Black Chrome	26966340
		Matt Black	26966670
		AXOR FinishPlus*	26966XXX

AXOR Starck Overhead shower 240 1jet

Features of all variants

/ shower head size: 240 mm
/ spray type: RainAir
/ flow rate RainAir spray at 3 bar: 19,8 l/min
/ function from: 13,5 l/min
/ maximum flow rate at 3 bar: 19,8 l/min
/ minimum flow pressure: 1,6 bar
/ overhead shower angle adjustable
/ material spray disc: metal
/ spray disc removable for cleaning
/ installation: ceiling or wall
/ connection thread: G ½
/ connection dimension: DN15
/ suitable for continous flow water heaters

RainAir

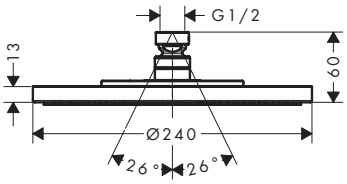

Technologies

Spray types

Certificates/declarations

Shower head size	Number of sprays	Spray types	Function from (l/min)	Max. flow rate at 3 bar (l/min)	Min. flow pressure (bar)	Finish	Code no.
240	1	RainAir	13.5	19.8	1.6	Chrome	28494000
						Brushed Bronze	28494140
						Brushed Black Chrome	28494340
						Brushed Nickel	28494820
						Polished Gold Optic	28494990
						AXOR FinishPlus*	28494XXX

Required parts (choose one):		Finish	Code no.
	AXOR ShowerSolutions Shower arm 390 mm	Chrome	26431000
		Brushed Bronze	26431140
		Brushed Black Chrome	26431340
		Brushed Nickel	26431820
		Polished Gold Optic	26431990
		AXOR FinishPlus*	26431XXX

For more information about this product, please see the next page.

*AXOR FinishPlus: For further AXOR FinishPlus surfaces please see the AXOR FinishPlus overview on page 44.

AXOR Starck Overhead shower 240 1jet

Required parts (choose one):	Finish	Code no.
AXOR ShowerSolutions Ceiling connector 100 mm	Chrome	26432000
	Brushed Bronze	26432140
	Brushed Black Chrome	26432340
	Brushed Nickel	26432820
	Polished Gold Optic	26432990
	AXOR FinishPlus*	26432XXX
AXOR ShowerSolutions Ceiling connector 300 mm	Chrome	26433000
	Brushed Bronze	26433140
	Brushed Black Chrome	26433340
	Brushed Nickel	26433820
	Polished Gold Optic	26433990
	AXOR FinishPlus*	26433XXX

AXOR Montreux Overhead showers 1jet

Features of all variants

/ spray type: RainAir
/ minimum flow pressure: 1,5 bar
/ overhead shower angle adjustable
/ material spray disc: metal
/ spray disc removable for cleaning
/ installation: ceiling or wall
/ connection thread: G ½
/ connection dimension: DN15
/ suitable for continous flow water heaters

240

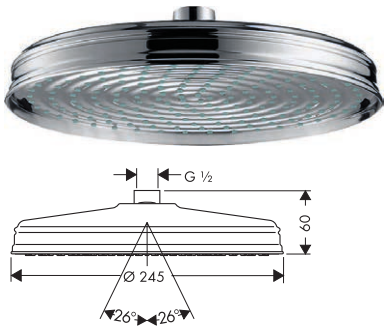

180

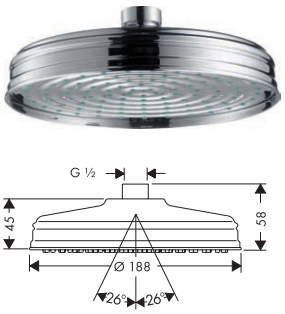

Technologies

AirPower
Quick Clean

Spray types

RainAir

Certificates/declarations

EPD

Overview variants

Shower head size	Number of sprays	Spray types	Function from (l/min)	Max. flow rate at 3 bar (l/min)	Min. flow pressure (bar)	Finish	Code no.
240	1	RainAir	11.5	17	1.5	Chrome	28474000
						Brushed Black Chrome	28474340
						Brushed Nickel	28474820
						AXOR FinishPlus*	28474XXX
180	1	RainAir	10.5	18	1.5	Chrome	28487000
						Brushed Black Chrome	28487340
						Brushed Nickel	28487820
						AXOR FinishPlus*	28487XXX

Optional parts:	Finish	Code no.
AXOR Montreux Shower arm 389 mm	Chrome	27348000
	Brushed Black Chrome	27348340
	Brushed Nickel	27348820
	AXOR FinishPlus*	27348XXX

Measurements within scale drawings are in mm.
Technical specifications and units of measure are subject to change.

AXOR Montreux Overhead showers 1jet

Optional parts:		Finish	Code no.
	AXOR ShowerSolutions Ceiling connector 100 mm	Chrome	26432000
		Brushed Black Chrome	26432340
		Brushed Nickel	26432820
		AXOR FinishPlus*	26432XXX
	AXOR ShowerSolutions Ceiling connector 300 mm	Chrome	26433000
		Brushed Black Chrome	26433340
		Brushed Nickel	26433820
		AXOR FinishPlus*	26433XXX

AXOR ShowerSphere Ceiling connectors

Features of all variants

/ length: 300 mm / material: metal

1 spray type

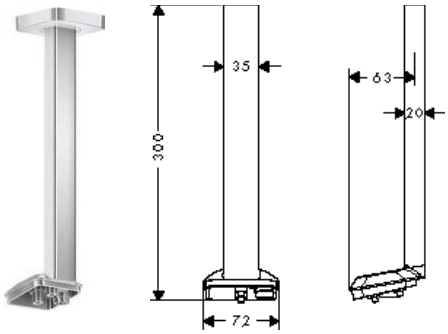

2 spray types

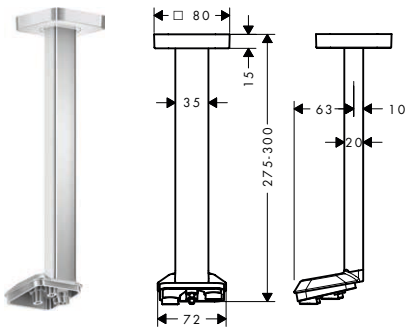

Overview variants

Special	Finish	Code no.
for overhead shower 370/220 and 250/160 1jet	Chrome	39767000
	Brushed Bronze	39767140
	Brushed Black Chrome	39767340
	Brushed Nickel	39767820
	Polished Gold Optic	39767990
	AXOR FinishPlus*	39767XXX
for overhead shower 370/220 2jet	Chrome	39768000
	Brushed Bronze	39768140
	Brushed Black Chrome	39768340
	Brushed Nickel	39768820
	Polished Gold Optic	39768990
	AXOR FinishPlus*	39768XXX

*AXOR FinishPlus: For further AXOR FinishPlus surfaces please see the AXOR FinishPlus overview on page 44.

AXOR ShowerSolutions Ceiling connectors

Features of all variants

/ installation type: exposed installation / material: brass / connection type: G ½

round

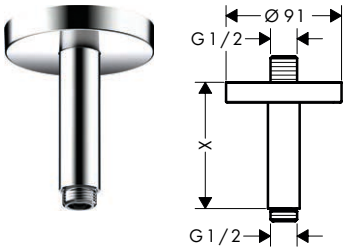

square

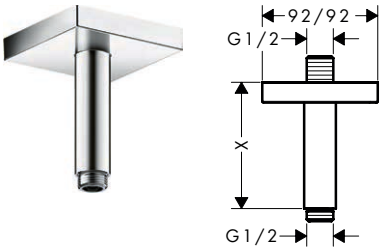

softsquare

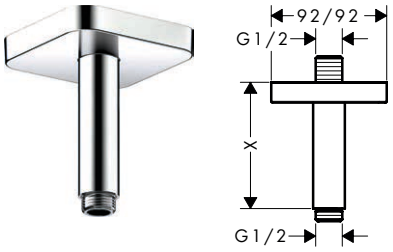

Overview variants

Length (mm)	Shape	Finish	Code no.
300	round	Chrome	26433000
		Brushed Bronze	26433140
		Brushed Black Chrome	26433340
		Matt Black	26433670
		Brushed Nickel	26433820
		Polished Gold Optic	26433990
		AXOR FinishPlus*	26433XXX
100	round	Chrome	26432000
		Brushed Bronze	26432140
		Brushed Black Chrome	26432340
		Matt Black	26432670
		Brushed Nickel	26432820
		Polished Gold Optic	26432990
		AXOR FinishPlus*	26432XXX
300	square	Chrome	26438000
		Brushed Black Chrome	26438340
		Matt Black	26438670
		AXOR FinishPlus*	26438XXX
100	square	Chrome	26437000
		Brushed Black Chrome	26437340
		Matt Black	26437670
		AXOR FinishPlus*	26437XXX
300	softsquare	Chrome	26966000
		Brushed Black Chrome	26966340
		Matt Black	26966670
		AXOR FinishPlus*	26966XXX
100	softsquare	Chrome	26965000
		Brushed Black Chrome	26965340
		Matt Black	26965670
		AXOR FinishPlus*	26965XXX

Measurements within scale drawings are in mm.
Technical specifications and units of measure are subject to change.

AXOR One Ceiling connectors

Features of all variants

/ length: 300 mm / material: metal

for overhead shower 280 1jet

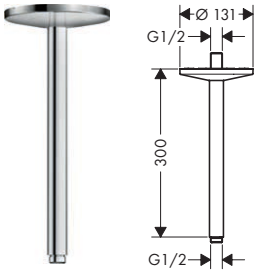

for overhead shower 280 2jet

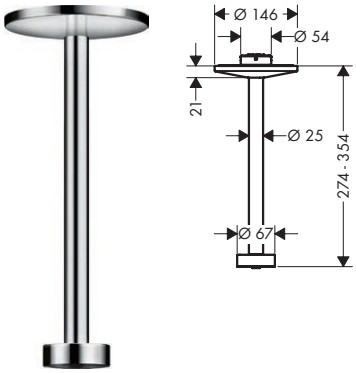

Overview variants

Special	Finish	Code no.
for overhead shower 280 1jet	Chrome	48495000
	Brushed Bronze	48495140
	Brushed Black Chrome	48495340
	Matt Black	48495670
	Matt White	48495700
	Brushed Brass	48495950
	Polished Gold Optic	48495990
	AXOR FinishPlus*	48495XXX
for overhead shower 280 2jet	Chrome	48496000
	Brushed Bronze	48496140
	Brushed Black Chrome	48496340
	Matt Black	48496670
	Matt White	48496700
	Brushed Brass	48496950
	Polished Gold Optic	48496990
	AXOR FinishPlus*	48496XXX

*AXOR FinishPlus: For further AXOR FinishPlus surfaces please see the AXOR FinishPlus overview on page 44.

AXOR ShowerSolutions Shower arms

Features of all variants

/ length: 390 mm
/ installation type: exposed installation
/ material: brass
/ connection type: G ½

round

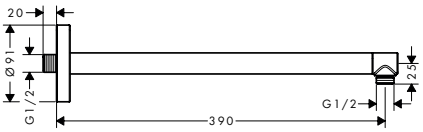

square

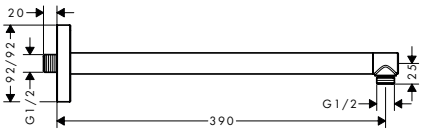

softsquare

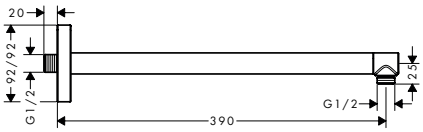

Overview variants

Shape	Finish	Code no.
round	Chrome	26431000
	Brushed Bronze	26431140
	Brushed Black Chrome	26431340
	Matt Black	26431670
	Brushed Nickel	26431820
	Polished Gold Optic	26431990
	AXOR FinishPlus*	26431XXX
square	Chrome	26436000
	Brushed Black Chrome	26436340
	Matt Black	26436670
	AXOR FinishPlus*	26436XXX
softsquare	Chrome	26967000
	Brushed Black Chrome	26967340
	Matt Black	26967670
	AXOR FinishPlus*	26967XXX

Measurements within scale drawings are in mm.
Technical specifications and units of measure are subject to change.

AXOR Montreux Shower arm 389 mm

Features of all variants

/ length: 389 mm
/ installation type: exposed installation
/ material: brass
/ connection type: G ½
/ version: 90° angle

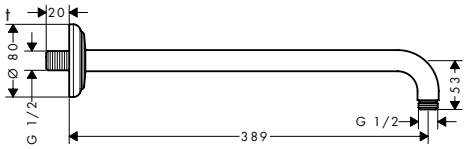

Finish	Code no.
Chrome	27348000
Brushed Black Chrome	27348340
Brushed Nickel	27348820
AXOR FinishPlus*	27348XXX

AXOR ShowerSphere Escutcheon 120/120 softsquare

Features

/ material: metal
/ wall or ceiling mounting
/ optional for 2jet overhead showers with ceiling connector: change escutcheon size to 120/120 dimension via AXOR Signature request

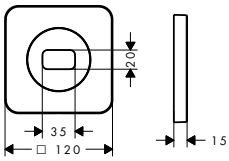

Finish	Code no.
Chrome	39769000
Brushed Bronze	39769140
Brushed Black Chrome	39769340
Brushed Nickel	39769820
Polished Gold Optic	39769990
AXOR FinishPlus*	39769XXX

Optional parts:	Finish	Code no.
AXOR ShowerSphere Overhead shower 370/220 1jet with shower arm	Chrome	39748000
	Brushed Bronze	39748140
	Brushed Black Chrome	39748340
	Brushed Nickel	39748820
	Polished Gold Optic	39748990
	AXOR FinishPlus*	39748XXX
AXOR ShowerSphere Overhead shower 370/220 1jet EcoSmart with shower arm	Chrome	39749000
	Brushed Bronze	39749140
	Brushed Black Chrome	39749340
	Brushed Nickel	39749820
	Polished Gold Optic	39749990
	AXOR FinishPlus*	39749XXX
AXOR ShowerSphere Overhead shower 250/160 1jet with shower arm	Chrome	39754000
	Brushed Bronze	39754140
	Brushed Black Chrome	39754340
	Brushed Nickel	39754820
	Polished Gold Optic	39754990
	AXOR FinishPlus*	39754XXX

For more information about this product, please see the next page.

*AXOR FinishPlus: For further AXOR FinishPlus surfaces please see the AXOR FinishPlus overview on page 44.

AXOR ShowerSphere Escutcheon 120/120 softsquare

Optional parts:		Finish	Code no.
	AXOR ShowerSphere Overhead shower 250/160 1jet EcoSmart with shower arm	Chrome	39755000
		Brushed Bronze	39755140
		Brushed Black Chrome	39755340
		Brushed Nickel	39755820
		Polished Gold Optic	39755990
		AXOR FinishPlus*	39755XXX
	AXOR ShowerSphere Overhead shower 250/160 1jet EcoSmart+ with shower arm	Chrome	39770000
		Brushed Bronze	39770140
		Brushed Black Chrome	39770340
		Brushed Nickel	39770820
		Polished Gold Optic	39770990
		AXOR FinishPlus*	39770XXX
	AXOR ShowerSphere Overhead shower 370/220 1jet with ceiling connector	Chrome	39760000
		Brushed Bronze	39760140
		Brushed Black Chrome	39760340
		Brushed Nickel	39760820
		Polished Gold Optic	39760990
		AXOR FinishPlus*	39760XXX
	AXOR ShowerSphere Overhead shower 370/220 1jet EcoSmart with ceiling connector	Chrome	39761000
		Brushed Bronze	39761140
		Brushed Black Chrome	39761340
		Brushed Nickel	39761820
		Polished Gold Optic	39761990
		AXOR FinishPlus*	39761XXX
	AXOR ShowerSphere Overhead shower 250/160 1jet with ceiling connector	Chrome	39763000
		Brushed Bronze	39763140
		Brushed Black Chrome	39763340
		Brushed Nickel	39763820
		Polished Gold Optic	39763990
		AXOR FinishPlus*	39763XXX
	AXOR ShowerSphere Overhead shower 250/160 1jet EcoSmart with ceiling connector	Chrome	39764000
		Brushed Bronze	39764140
		Brushed Black Chrome	39764340
		Brushed Nickel	39764820
		Polished Gold Optic	39764990
		AXOR FinishPlus*	39764XXX
	AXOR ShowerSphere Overhead shower 250/160 1jet EcoSmart+ with ceiling connector	Chrome	39771000
		Brushed Bronze	39771140
		Brushed Black Chrome	39771340
		Brushed Nickel	39771820
		Polished Gold Optic	39771990
		AXOR FinishPlus*	39771XXX

Measurements within scale drawings are in mm.
Technical specifications and units of measure are subject to change.

AXOR ShowerSolutions Escutcheon softsquare

Features

/ material: metal / wall-mounted

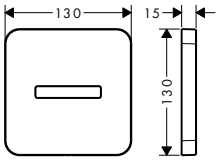

Finish	Code no.
Chrome	35214000
Matt Black	35214670
AXOR FinishPlus*	35214XXX

Optional parts:		Finish	Code no.
	AXOR ShowerSolutions Overhead shower 300 2jet with shower arm	Chrome	35303000
		Matt Black	35303670
		AXOR FinishPlus*	35303XXX
	AXOR ShowerSolutions Overhead shower 300 1jet with shower arm	Chrome	35300000
		Matt Black	35300670
		AXOR FinishPlus*	35300XXX
	AXOR ShowerSolutions Overhead shower 300/300 2jet with shower arm	Chrome	35318000
		AXOR FinishPlus*	35318XXX
	AXOR ShowerSolutions Overhead shower 300/300 1jet with shower arm	Chrome	35314000
		AXOR FinishPlus*	35314XXX
	AXOR ShowerSolutions Overhead shower 250 2jet with shower arm	Chrome	35296000
		AXOR FinishPlus*	35296XXX
	AXOR ShowerSolutions Overhead shower 250 1jet with shower arm	Chrome	35284000
		AXOR FinishPlus*	35284XXX
	AXOR ShowerSolutions Overhead shower 250/250 2jet with shower arm	Chrome	35310000
		AXOR FinishPlus*	35310XXX
	AXOR ShowerSolutions Overhead shower 250/250 1jet with shower arm	Chrome	35306000
		AXOR FinishPlus*	35306XXX

AXOR Citterio C Wall escutcheon 120/120 softsquare

Features

/ material: metal / wall-mounted

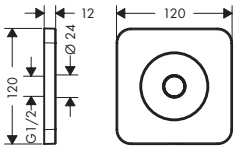

Finish	Code no.
Chrome	28801000
Matt Black	28801670
AXOR FinishPlus*	28801XXX

Optional parts:		Finish	Code no.
	AXOR Citterio C Overhead shower 270/270 1jet EcoSmart with shower arm	Chrome	28791000
		Matt Black	28791670
		AXOR FinishPlus*	28791XXX

For more information about this product, please see the next page.

*AXOR FinishPlus: For further AXOR FinishPlus surfaces please see the AXOR FinishPlus overview on page 44.

AXOR Citterio C Wall escutcheon 120/120 softsquare

Optional parts:		Finish	Code no.
	AXOR Citterio C Overhead shower 270/270 1jet with shower arm	Chrome	28790000
		Matt Black	28790670
		AXOR FinishPlus*	28790XXX
	AXOR Citterio C Overhead shower 120/120 1jet EcoSmart with shower arm	Chrome	28810000
		AXOR FinishPlus*	28810XXX

AXOR Citterio C Ceiling escutcheon 120/120 softsquare

Features

/ material: metal

/ ceiling installation

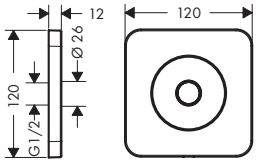

Finish	Code no.
Chrome	28802000
Matt Black	28802670
AXOR FinishPlus*	28802XXX

Optional parts:		Finish	Code no.
	AXOR Citterio C Overhead shower 270/270 1jet EcoSmart with ceiling connector	Chrome	28793000
		Matt Black	28793670
		AXOR FinishPlus*	28793XXX
	AXOR Citterio C Overhead shower 270/270 1jet with ceiling connector	Chrome	28792000
		Matt Black	28792670
		AXOR FinishPlus*	28792XXX

AXOR ShowerSolutions / AXOR Citterio E Shower modules for concealed installation

Features of all variants

/ shower head size: 120 mm
/ spray type: Rain
/ spray angle adjustable in five steps
/ functions as overhead, shoulder or side shower
/ maximum flow rate at 3 bar: 5,3 l/min
/ minimum flow pressure: 1 bar
/ connection thread: G ½
/ in a joined installation (10 mm distance), the basic set no.28486180 must be used
/ in a freely arranged installation, connection via a G ½ connecting thread is possible
/ if installed as an overhead shower with several joint modules, the use of installation aid no.28470180 is recommended
/ suitable for continous flow water heaters
/ connection dimension: DN15
/ material: metal
/ EU taxonomy: max. 6 l/min – Substantial Contribution (SC) possible

square

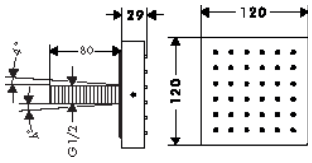

softsquare

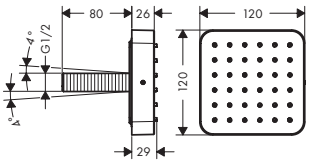

Special feature

Eco Smart+

Technologies

Quick Clean

Spray types

Rain

Measurements within scale drawings are in mm.
Technical specifications and units of measure are subject to change.

AXOR ShowerSolutions / AXOR Citterio E Shower modules for concealed installation

Overview variants

Shower head size	Number of sprays	Spray types	Function from (l/min)	Max. flow rate at 3 bar (l/min)	Min. flow pressure (bar)	Shape	Finish	Code no.
120/120	1	Rain	3.9	5.3	1	square	Chrome	28491000
							AXOR FinishPlus*	28491XXX
120/120	1	Rain	3.9	5.3	1	softsquare	Chrome	36822000
							Brushed Bronze	36822140
							Brushed Black Chrome	36822340
							AXOR FinishPlus*	36822XXX

Optional parts:		Code no.
	AXOR ShowerSolutions Basic set for shower module 120/120 for concealed installation	28486180
	AXOR ShowerSolutions Installation part	28470180

Body showers 1jet

Features of all variants

/ shower head size: 65 mm
/ spray type: Rain
/ spray disc surface: grey
/ side shower angle adjustable
/ maximum flow rate at 3 bar: 5 l/min
/ minimum flow pressure: 1,5 bar
/ connection thread: G ½
/ suitable for continous flow water heaters
/ connection dimension: DN15
/ material: metal
/ EU taxonomy: max. 6 l/min – Substantial Contribution (SC) possible

round

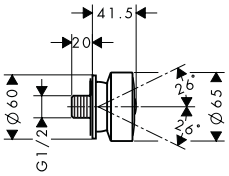

square

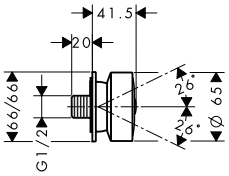

Special feature

Technologies

Spray types

Overview variants

Shower head size	Number of sprays	Spray types	Function from (l/min)	Max. flow rate at 3 bar (l/min)	Min. flow pressure (bar)	Shape	Finish	Code no.
65	1	Rain	3.9	5	1.5	round	Chrome	28464000
							AXOR FinishPlus*	28464XXX
65	1	Rain	3.9	5	1.5	square	Chrome	28469000
							AXOR FinishPlus*	28469XXX

*AXOR FinishPlus: For further AXOR FinishPlus surfaces please see the AXOR FinishPlus overview on page 44.

AXOR ShowerSolutions Hand showers 3jet

Features of all variants

/ shower head size: 132 mm
/ spray type: PowderRain, Intense PowderRain, MonoRain
/ convenient spray selection via Select button
/ QuickClean: Limescale deposits can simply be rubbed off with your finger
/ with internal water conduction
/ rinseable filter washer
/ connection thread: G ½
/ suitable for continous flow water heaters

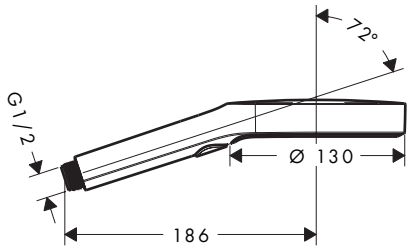

Special feature

Technologies

Spray types

Overview variants

Shower head size	Number of sprays	Spray types	Function from (l/min)	Max. flow rate at 3 bar (l/min)	Min. flow pressure (bar)	Finish	Available from	Code no.
130	3	PowderRain, Intense PowderRain, EnergeticRain		6		Chrome	Q1/2026	39774000
						Brushed Bronze	Q1/2026	39774140
						Brushed Black Chrome	Q1/2026	39774340
						Brushed Nickel	Q1/2026	39774820
						Polished Gold Optic	Q1/2026	39774990
						AXOR FinishPlus*		39774XXX
130	3	PowderRain, Intense PowderRain, EnergeticRain		8		Chrome	Q1/2026	39773000
						Brushed Bronze	Q1/2026	39773140
						Brushed Black Chrome	Q1/2026	39773340
						Brushed Nickel	Q1/2026	39773820
						Polished Gold Optic	Q1/2026	39773990
						AXOR FinishPlus*		39773XXX
130	3	PowderRain, Intense PowderRain, MonoRain	5.5	11.1	0.8	Chrome		39772000
						Brushed Bronze		39772140
						Brushed Black Chrome		39772340
						Brushed Nickel		39772820
						Polished Gold Optic		39772990
						AXOR FinishPlus*		39772XXX

Measurements within scale drawings are in mm.
Technical specifications and units of measure are subject to change.

AXOR One Hand shower 75 1jet EcoSmart

Features of all variants

/ shower head size: 73 mm
/ spray type: PowderRain
/ QuickClean: Limescale deposits can simply be rubbed off with your finger
/ maximum flow rate at 3 bar: 9,1 l/min
/ function from: 5,8 l/min
/ minimum flow pressure: 0,8 bar
/ material: metal
/ with internal water conduction
/ rinseable filter washer
/ connection thread: G ½
/ suitable for continous flow water heaters

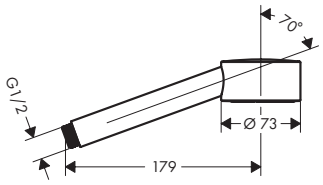

Special feature

EcoSmart

Technologies

Quick Clean

Spray types

Powder Rain

Shower head size	Number of sprays	Spray types	Function from (l/min)	Max. flow rate at 3 bar (l/min)	Min. flow pressure (bar)	Finish	Code no.
75	1	PowderRain	5.8	9.1	0.8	Chrome	48651000
						Brushed Bronze	48651140
						Brushed Black Chrome	48651340
						Matt Black	48651670
						Matt White	48651700
						Brushed Brass	48651950
						Polished Gold Optic	48651990
						AXOR FinishPlus*	48651XXX

AXOR One Hand shower 2jet

Features of all variants

/ shower head size: 124 x 24 mm
/ spray type: Rain, RainFlow
/ convenient spray selection via Select button
/ QuickClean: Limescale deposits can simply be rubbed off with your finger
/ maximum flow rate at 3 bar: 11,5 l/min
/ function from: 10,5 l/min
/ minimum flow pressure: 2,4 bar
/ with internal water conduction
/ rinseable filter washer
/ connection thread: G ½
/ suitable for continous flow water heaters
/ not recommended for rim-/ tile-mounted mixers

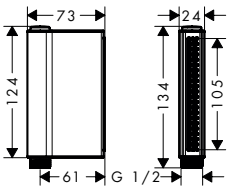

Technologies

Select SELECT

Quick Clean

Spray types

Rain

RainFlow

Shower head size	Number of sprays	Spray types	Function from (l/min)	Max. flow rate at 3 bar (l/min)	Min. flow pressure (bar)	Finish	Code no.
124/24	2	Rain, RainFlow	10.5	11.5	2.4	Chrome	45720000
						Brushed Bronze	45720140
						Brushed Black Chrome	45720340
						Matt Black	45720670
						Matt White	45720700
						Brushed Brass	45720950
						Polished Gold Optic	45720990
						AXOR FinishPlus*	45720XXX

*AXOR FinishPlus: For further AXOR FinishPlus surfaces please see the AXOR FinishPlus overview on page 44.

AXOR Starck Baton hand showers 2jet, 1jet

Features of all variants

/ shower head size: 68 x 24 mm
/ QuickClean: Limescale deposits can simply be rubbed off with your finger
/ minimum flow pressure: 1 bar
/ rinseable filter washer
/ connection thread: G ½
/ suitable for continous flow water heaters

2 spray types

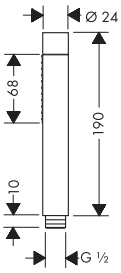

1 spray type

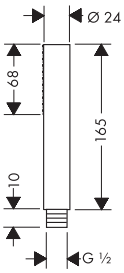

Special feature

EcoSmart

Technologies

Quick Clean

Spray types

Rain
Mono Rain

Certificates/declarations

EPD

Overview variants

Shower head size	Number of sprays	Spray types	Function from (l/min)	Max. flow rate at 3 bar (l/min)	Min. flow pressure (bar)	Finish	Code no.
68/24	2	Rain, MonoRain	6.4	14.5	1	Chrome	28532000
						Brushed Bronze	28532140
						Brushed Black Chrome	28532340
						Matt Black	28532670
						Brushed Nickel	28532820
						Polished Gold Optic	28532990
						AXOR FinishPlus*	28532XXX
68/24	1	Rain	6.5	8	1	Chrome	10531000
						Brushed Bronze	10531140
						Brushed Black Chrome	10531340
						Brushed Nickel	10531820
						Polished Gold Optic	10531990
						AXOR FinishPlus*	10531XXX

Measurements within scale drawings are in mm.
Technical specifications and units of measure are subject to change.

AXOR Showers/Front Hand shower 85 1jet EcoSmart

Features of all variants

/ shower head size: 85 mm
/ spray type: Rain
/ QuickClean: Limescale deposits can simply be rubbed off with your finger
/ maximum flow rate at 3 bar: 8,2 l/min
/ function from: 5,5 l/min
/ minimum flow pressure: 1 bar
/ with internal water conduction
/ rinseable filter washer
/ connection thread: G ½
/ suitable for continous flow water heaters

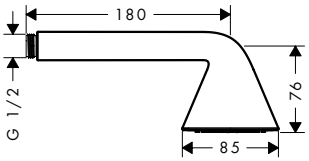

Special feature

Technologies

Spray types

Shower head size	Number of sprays	Spray types	Function from (l/min)	Max. flow rate at 3 bar (l/min)	Min. flow pressure (bar)	Finish	Code no.
85	1	Rain	5.5	8.2	1	Chrome	26025000
						AXOR FinishPlus*	26025XXX

AXOR ShowerSolutions Hand showers 3jet

Features of all variants

/ shower head size: 125 mm
/ spray type: Rain, RainAir, WhirlAir
/ convenient spray selection via Select button
/ QuickClean: Limescale deposits can simply be rubbed off with your finger
/ with internal water conduction
/ rinseable filter washer
/ connection thread: G ½
/ suitable for continous flow water heaters

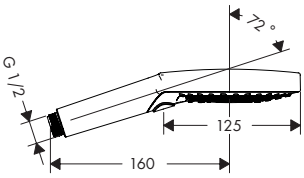

Special feature

Technologies

Spray types

Overview variants

Shower head size	Number of sprays	Spray types	Function from (l/min)	Max. flow rate at 3 bar (l/min)	Min. flow pressure (bar)	Finish	Code no.
120	3	Rain, RainAir, WhirlAir	6.8	8	1.5	Chrome	26051000
						Matt Black	26051670
						AXOR FinishPlus*	26051XXX
120	3	Rain, RainAir, WhirlAir	7.6	13.4	1.4	Chrome	26050000
						Brushed Bronze	26050140
						Brushed Black Chrome	26050340
						Matt Black	26050670
						Brushed Nickel	26050820
						Polished Gold Optic	26050990
						AXOR FinishPlus*	26050XXX

*AXOR FinishPlus: For further AXOR FinishPlus surfaces please see the AXOR FinishPlus overview on page 44.

AXOR Montreux Hand shower 100 1jet

Features of all variants

/ shower head size: 100 mm
/ spray type: RainAir
/ spray disc surface: grey
/ QuickClean: Limescale deposits can simply be rubbed off with your finger
/ maximum flow rate at 3 bar: 16 l/min
/ function from: 7,3 l/min
/ minimum flow pressure: 0,9 bar
/ rinseable filter washer
/ connection thread: G ½
/ suitable for continous flow water heaters

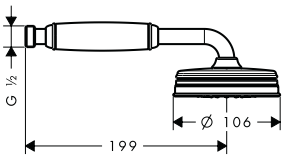

Technologies

Spray types

Shower head size	Number of sprays	Spray types	Function from (l/min)	Max. flow rate at 3 bar (l/min)	Min. flow pressure (bar)	Finish	Code no.
100	1	RainAir	7.3	16	0.9	Chrome	16320000
						Brushed Black Chrome	16320340
						Brushed Nickel	16320820
						AXOR FinishPlus*	16320XXX

AXOR One Affusion pipe set

Features of all variants

/ consists of: affusion pipe, shower holder, wall outlet, textile shower hose
/ maximum flow rate at 3 bar: 13 l/min
/ operating pressure: min. 1 bar/max. 10 bar
/ suitable for cold water connection
/ Laminar spray with spray former
/ spray is not enriched with air
/ shower hose with cylindrical nut on both ends
/ pivot connector prevents hose from tangling
/ shower hose length: 2000 mm
/ connection type: G ½
/ with non-return valve
/ integrated support function
/ wall supports of metal
/ wall mounting: screw fastening
/ rinseable filter washer
/ not intrinsically safe against backflow

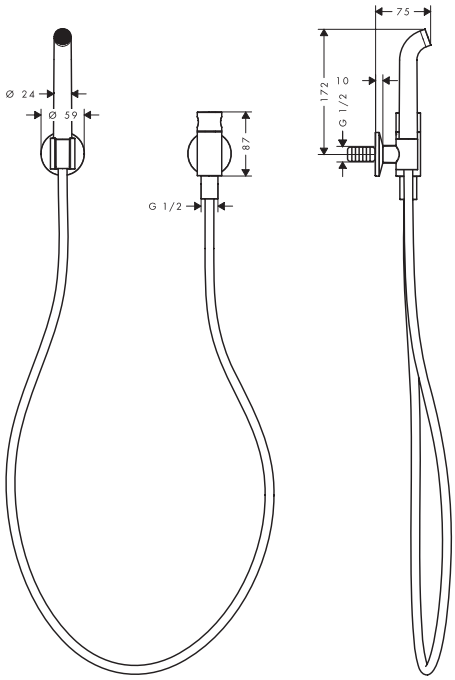

Number of sprays	Max. flow rate at 3 bar (l/min)	Finish	Code no.
1	13	Chrome	48655000
		Brushed Bronze	48655140
		Brushed Black Chrome	48655340
		Brushed Brass	48655950
		Polished Gold Optic	48655990
		AXOR FinishPlus*	48655XXX

Measurements within scale drawings are in mm.
Technical specifications and units of measure are subject to change.

AXOR One Affusion pipe

Features of all variants

/ maximum flow rate at 3 bar: 13 l/min
/ Laminar spray with spray former
/ spray is not enriched with air
/ suitable for cold water connection
/ rinseable filter washer
/ connection thread: G ½
/ suitable for continous flow water heaters

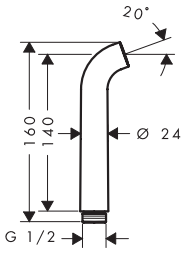

Number of sprays	Max. flow rate at 3 bar (l/min)	Finish	Code no.
1	13	Chrome	48656000
		Brushed Bronze	48656140
		Brushed Black Chrome	48656340
		Brushed Brass	48656950
		Polished Gold Optic	48656990
		AXOR FinishPlus*	48656XXX

AXOR ShowerSolutions Porter units

Features of all variants

/ metal housing with internal water supply made of plastic
/ for shower hoses with a conical nut
/ integrated support function
/ metal
/ connection type: G ½
/ metal housing with internal water supply made of plastic

round

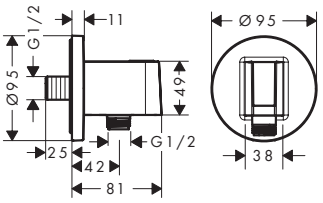

square

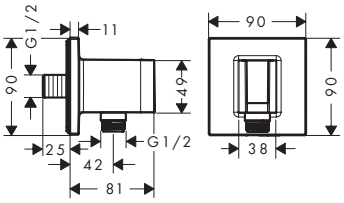

softsquare

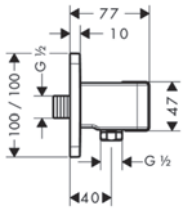

For more information about this product, please see the next page.

*AXOR FinishPlus: For further AXOR FinishPlus surfaces please see the AXOR FinishPlus overview on page 44.

AXOR ShowerSolutions Porter units

Overview variants

Shape	Finish	Code no.
round	Chrome	36733000
	Brushed Black Chrome	36733340
	Matt Black	36733670
	AXOR FinishPlus*	36733XXX
square	Chrome	36734000
	Brushed Black Chrome	36734340
	Matt Black	36734670
	AXOR FinishPlus*	36734XXX
softsquare	Chrome	11626000
	Matt Black	11626670
	AXOR FinishPlus*	11626XXX

AXOR Citterio E Porter unit 120/120 softsquare

Features of all variants

/ for shower hoses with a conical nut
/ integrated support function
/ metal connection angle
/ connection type: G ½

/ in a joined installation (10 mm distance) we recommend for perfect handling only the horizontal installation

/ in a joined installation (10 mm distance), the basic set no.28486180 must be used
/ in a freely-arranged installation (distance greater than 10 mm), no basic set is required

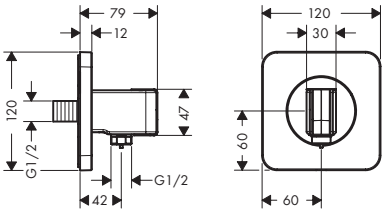

Shape	Finish	Code no.
softsquare	Chrome	36724000
	Brushed Bronze	36724140
	Brushed Black Chrome	36724340
	Matt Black	36724670
	Brushed Nickel	36724820
	Polished Gold Optic	36724990
	AXOR FinishPlus*	36724XXX

Optional parts:	Code no.
AXOR ShowerSolutions Basic set for shower module 120/120 for concealed installation	28486180

Measurements within scale drawings are in mm.
Technical specifications and units of measure are subject to change.

AXOR Citterio C Porter unit 120/120 softsquare with baton hand shower 2jet and textile shower hose

Features of all variants

/ consists of: porter unit, baton hand shower, shower hose, shower holder
/ shower head size: 68 x 24 mm
/ spray type: Rain, MonoRain
/ QuickClean: Limescale deposits can simply be rubbed off with your finger
/ maximum flow rate at 3 bar: 8,7 l/min
/ minimum flow pressure: 1 bar
/ operating pressure: min. 1 bar/max. 10 bar
/ shower hose with cylindrical nut on both ends
/ shower hose length: 1600 mm
/ with non-return valve
/ integrated support function
/ wall mounting: screw fastening
/ rinseable filter washer

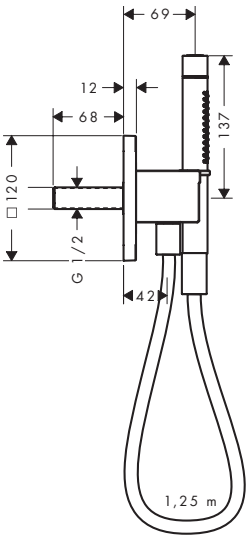

Technologies

Spray types

Number of sprays	Spray types	Function from (l/min)	Max. flow rate at 3 bar (l/min)	Min. flow pressure (bar)	Shower hose length (mm)	Finish	Code no.
2	Rain, MonoRain	5.6	8.7	1	1600	Chrome	49626000
						Brushed Bronze	49626140
						Brushed Black Chrome	49626340
						Matt Black	49626670
						Brushed Nickel	49626820
						Polished Gold Optic	49626990
						AXOR FinishPlus*	49626XXX

*AXOR FinishPlus: For further AXOR FinishPlus surfaces please see the AXOR FinishPlus overview on page 44.

AXOR Starck Porter unit 120/120 with baton hand shower 2jet and shower hose

Features of all variants

/ consists of: porter unit, baton hand shower, shower holder, shower hose
/ shower head size: 68 x 24 mm
/ spray type: Rain, MonoRain
/ maximum flow rate at 3 bar: 16,2 l/min
/ minimum flow pressure: 1 bar
/ operating pressure: min. 1 bar/max. 10 bar
/ in a joined installation (10 mm distance), the basic set no.28486180 must be used
/ in a joined installation (10 mm distance) we recommend for perfect handling only the horizontal installation
/ in a freely-arranged installation (distance greater than 10 mm), no basic set is required
/ for shower hoses with conical or cylindrical nut on both sides
/ shower hose length: 1250 mm
/ with non-return valve
/ integrated support function
/ wall mounting: screw fastening
/ rinseable filter washer

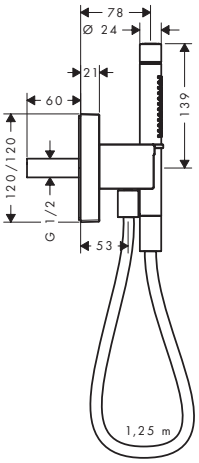

Spray types

Shower hose length (mm)	Number of sprays	Spray types	Function from (l/min)	Max. flow rate at 3 bar (l/min)	Min. flow pressure (bar)	Finish	Code no.
1250	2	Rain, MonoRain	9.2	16.2	1	Chrome	12626000
						Brushed Bronze	12626140
						Brushed Black Chrome	12626340
						Brushed Nickel	12626820
						Polished Gold Optic	12626990
						AXOR FinishPlus*	12626XXX

Optional parts:		Code no.
	AXOR ShowerSolutions Basic set for shower module 120/120 for concealed installation	28486180

AXOR One Porter unit round

Features

/ for shower hoses with a conical nut
/ integrated support function
/ maximum flow rate at 3 bar: 15 l/min
/ metal
/ connection type: G ½

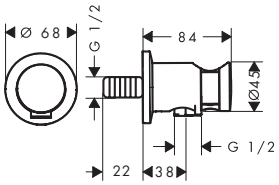

Finish	Code no.
Chrome	48780000
Brushed Bronze	48780140
Brushed Black Chrome	48780340
Matt Black	48780670
Brushed Brass	48780950
Polished Gold Optic	48780990
AXOR FinishPlus*	48780XXX

Measurements within scale drawings are in mm.
Technical specifications and units of measure are subject to change.

AXOR One Porter unit

Features

/ for hoses with cylindrical nuts
/ integrated support function
/ maximum flow rate at 3 bar: 15 l/min
/ metal
/ connection type: G ½

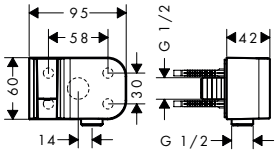

Finish	Code no.
Chrome	45723000
Brushed Bronze	45723140
Brushed Black Chrome	45723340
Matt Black	45723670
Matt White	45723700
Brushed Brass	45723950
Polished Gold Optic	45723990
AXOR FinishPlus*	45723XXX

AXOR Bidette Showers Bidette hand showers 1jet for cold water with shower holder

Features of all variants

/ consists of: bidette hand shower, shower holder with integrated shut-off valve, metal shower hose
/ shower head size: 28 mm
/ maximum flow rate at 3 bar: 4,4 l/min
/ minimum flow pressure: 1 bar
/ not suitable for operation in countries with valid EN 1717
/ spray disc removable for cleaning
/ trigger control to adjust flow rate / spray intensity
/ shower hose with conical nut on both ends
/ pivot joints on both sides
/ shower hose length: 1250 mm
/ connection type: G ½
/ with non-return valve
/ rinseable filter washer
/ material: metal
/ not intrinsically safe against backflow

round

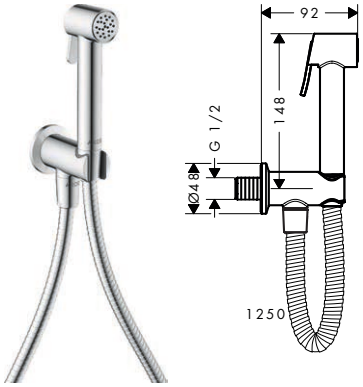

softsquare

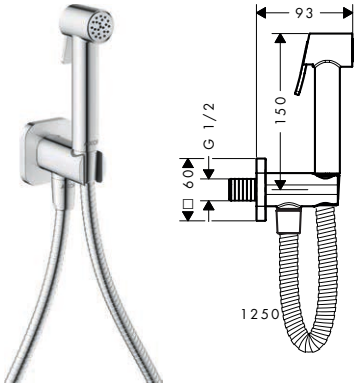

Special feature

EcoSmart

Overview variants

Shape	Number of sprays	Max. flow rate at 3 bar (l/min)	Min. flow pressure (bar)	Finish	Code no.
round	1	4.4	1	Chrome	29240000
				Brushed Bronze	29240140
				Brushed Black Chrome	29240340
				Brushed Nickel	29240820
				Polished Gold Optic	29240990
				AXOR FinishPlus*	29240XXX
softsquare	1	4.4	1	Chrome	29241000
				Brushed Bronze	29241140
				Brushed Black Chrome	29241340
				Brushed Nickel	29241820
				Polished Gold Optic	29241990
				AXOR FinishPlus*	29241XXX

*AXOR FinishPlus: For further AXOR FinishPlus surfaces please see the AXOR FinishPlus overview on page 44.

AXOR Bidette Showers Bidette hand showers 1jet for mixed water with shower holder

Features of all variants

/ consists of: bidette hand shower, shower holder with integrated shut-off valve, metal shower hose
/ shower head size: 28 mm
/ maximum flow rate at 3 bar: 4,4 l/min
/ temperature pre-adjustable
/ not suitable for operation in countries with valid EN 1717
/ spray disc removable for cleaning
/ trigger control to adjust flow rate / spray intensity
/ shower hose with conical nut on both ends
/ pivot joints on both sides
/ shower hose length: 1250 mm
/ connection type: basic set
/ with non-return valve
/ rinseable filter washer
/ material: metal
/ not intrinsically safe against backflow
/ not included: basic set

round

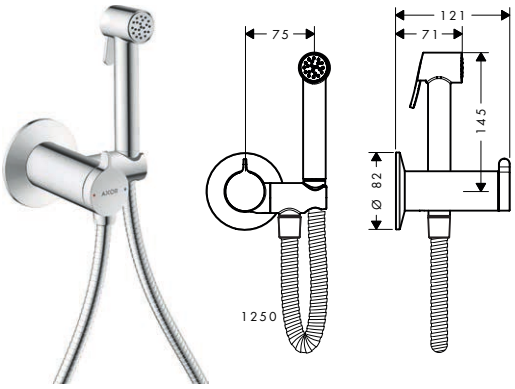

softsquare

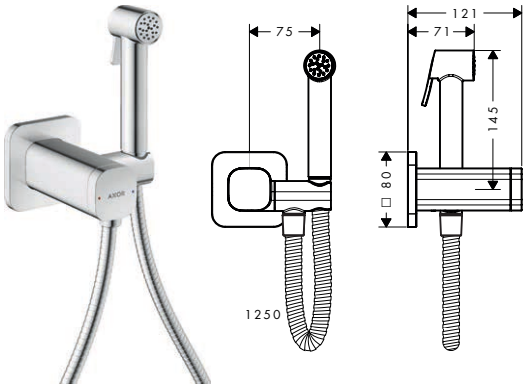

Special feature

EcoSmart

Overview variants

Shape	Number of sprays	Max. flow rate at 3 bar (l/min)	Finish	Code no.
round	1	4.4	Chrome	29242000
			Brushed Bronze	29242140
			Brushed Black Chrome	29242340
			Brushed Nickel	29242820
			Polished Gold Optic	29242990
			AXOR FinishPlus*	29242XXX
softsquare	1	4.4	Chrome	29243000
			Brushed Bronze	29243140
			Brushed Black Chrome	29243340
			Brushed Nickel	29243820
			Polished Gold Optic	29243990
			AXOR FinishPlus*	29243XXX

Required parts:	Code no.
Basic set for mixed water bidette	29235180
Basic set for mixed water bidette EU	29239180

Measurements within scale drawings are in mm.
Technical specifications and units of measure are subject to change.

AXOR One Shower set 75 1jet EcoSmart with wall connection

Features of all variants

/ consists of: hand shower, shower bar, shower hose, slider
/ shower head size: 73 mm
/ spray type: PowderRain
/ QuickClean: Limescale deposits can simply be rubbed off with your finger
/ maximum flow rate at 3 bar: 9,1 l/min
/ minimum flow pressure: 0,8 bar
/ operating pressure: min. 1.5 bar/max. 6 bar
/ wall supports of metal
/ profile pipe: round
/ shower bar diameter: 25 mm
/ drilling distance: 929 mm
/ shower hose with conical nut on both ends
/ pivot connector prevents hose from tangling
/ metal hand shower holder

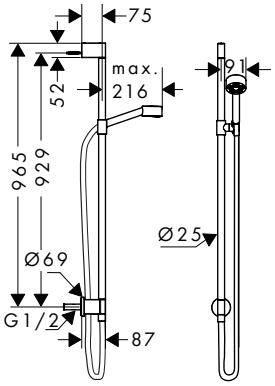

Special feature

Technologies

Spray types

Drilling distance (mm)	Shower head size	Spray types	Function from (l/min)	Max. flow rate at 3 bar (l/min)	Min. flow pressure (bar)	Finish	Code no.
929	75	PowderRain	5.8	9.1	0.8	Chrome	48791000
						Brushed Bronze	48791140
						Brushed Black Chrome	48791340
						Matt Black	48791670
						Matt White	48791700
						Brushed Brass	48791950
						Polished Gold Optic	48791990
						AXOR FinishPlus*	48791XXX

*AXOR FinishPlus: For further AXOR FinishPlus surfaces please see the AXOR FinishPlus overview on page 44.

AXOR One Shower bar 0,90 m with wall connection and shower hose 1.60 m

Features of all variants

/ consists of: shower bar, slider, wall outlet, shower hose
/ pivot connector prevents hose from tangling
/ for shower hoses with a conical nut
/ pipe length: 965 mm
/ shower bar diameter: 25 mm
/ profile pipe: round
/ drilling distance: 929 mm
/ shower hose length: 1600 mm
/ slider steplessly adjustable
/ wall supports of metal
/ metal hand shower holder

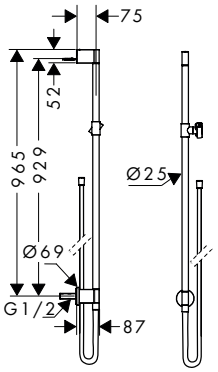

Length (m)	Shower hose length (mm)	Finish	Code no.
0,90	1600	Chrome	48792000
		Brushed Bronze	48792140
		Brushed Black Chrome	48792340
		Matt Black	48792670
		Matt White	48792700
		Brushed Brass	48792950
		Polished Gold Optic	48792990
		AXOR FinishPlus*	48792XXX

AXOR One Shower set 0.90 m with hand shower 2jet

Features of all variants

/ consists of: hand shower, shower bar, shower hose, slider
/ shower head size: 124 x 24 mm
/ spray type: Rain, RainFlow
/ convenient spray selection via Select button
/ QuickClean: Limescale deposits can simply be rubbed off with your finger
/ flow rate Rain spray at 3 bar: 11,5 l/min
/ flow rate RainFlow spray at 3 bar: 11,5 l/min
/ maximum flow rate at 3 bar: 11,5 l/min
/ minimum flow pressure: 2,4 bar
/ operating pressure: min. 2.5 bar/max. 10 bar
/ wall supports made of plastic
/ wall bar type: AXOR Starck wall bar 0.90 m
/ profile pipe: round
/ shower bar diameter: 25 mm
/ drilling distance: 915 mm
/ shower hose with cylindrical nut on both ends
/ pivot joints on shower and fixed side

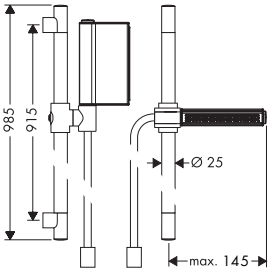

Technologies

Spray types

Measurements within scale drawings are in mm.
Technical specifications and units of measure are subject to change.

AXOR One Shower set 0.90 m with hand shower 2jet

Shower head size	Spray types	Function from (l/min)	Max. flow rate at 3 bar (l/min)	Min. flow pressure (bar)	Finish	Code no.
124/24	Rain, RainFlow	10.5	11.5	2.4	Chrome	45722000
					Brushed Bronze	45722140
					Brushed Black Chrome	45722340
					Brushed Brass	45722950
					Polished Gold Optic	45722990
					AXOR FinishPlus*	45722XXX

AXOR Showers/Front Shower set 0.90 m with hand shower 85 1jet EcoSmart

Features of all variants

/ consists of: hand shower, shower bar, shower hose, slider
/ shower head size: 85 mm
/ spray type: Rain
/ QuickClean: Limescale deposits can simply be rubbed off with your finger
/ flow rate Rain spray at 3 bar: 8,2 l/min
/ maximum flow rate at 3 bar: 8,2 l/min
/ minimum flow pressure: 1 bar
/ operating pressure: min. 1 bar/max. 6 bar
/ support for shower hose with conical nuts
/ wall supports of metal
/ profile pipe: round
/ shower bar diameter: 22 mm
/ drilling distance: 915 mm
/ pivot connector prevents hose from tangling

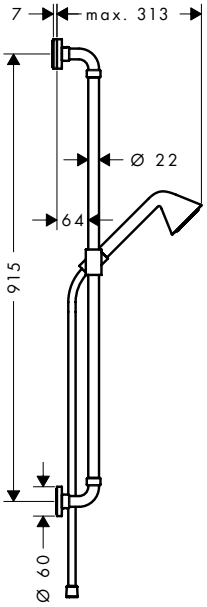

Special feature

Technologies

Spray types

Drilling distance (mm)	Shower head size	Spray types	Function from (l/min)	Max. flow rate at 3 bar (l/min)	Min. flow pressure (bar)	Finish	Code no.
915	85	Rain	5.5	8.2	1	Chrome	26023000
						AXOR FinishPlus*	26023XXX

*AXOR FinishPlus: For further AXOR FinishPlus surfaces please see the AXOR FinishPlus overview on page 44.

AXOR Starck Shower sets 2jet, 1jet

Features of all variants

/ consists of: shower bar, baton hand shower, shower hose, slider
/ shower head size: 68 x 24 mm
/ QuickClean: Limescale deposits can simply be rubbed off with your finger
/ minimum flow pressure: 1 bar
/ operating pressure: min. 1 bar/max. 6 bar
/ wall supports made of plastic
/ profile pipe: round
/ shower bar diameter: 25 mm
/ drilling distance: 915 mm
/ shower hose with cylindrical nut on both ends
/ pivot connector prevents hose from tangling

2 spray types

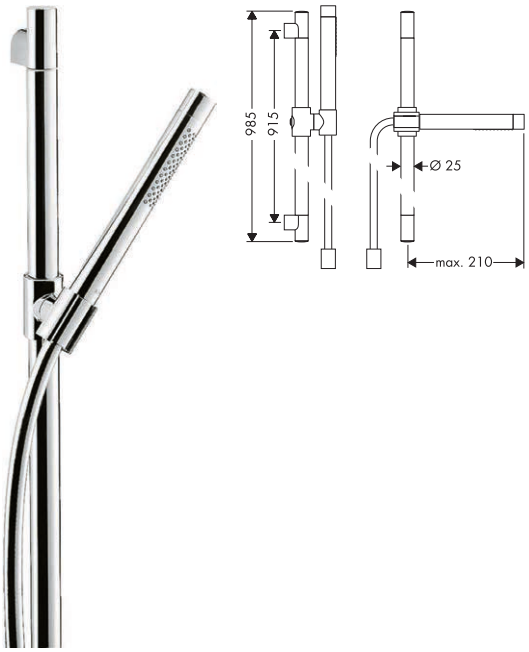

1 spray type

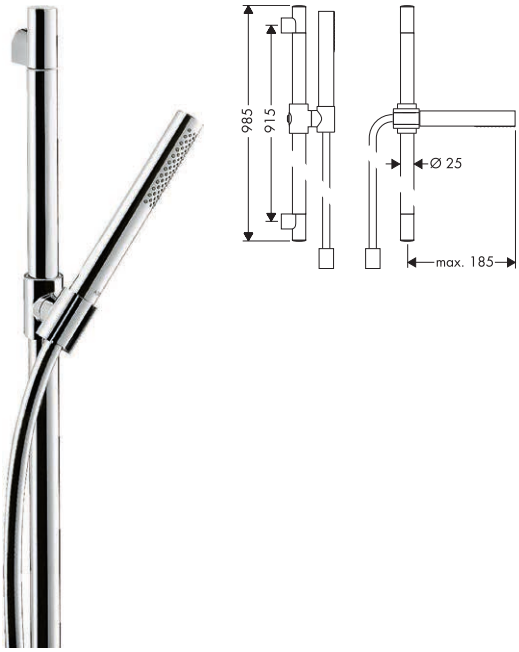

Special feature

EcoSmart

Technologies

Quick Clean

Spray types

Rain

Mono Rain

Overview variants

Shower head size	Number of sprays	Spray types	Function from (l/min)	Max. flow rate at 3 bar (l/min)	Min. flow pressure (bar)	Finish	Code no.
68/24	2	Rain, MonoRain	6.4	14.5	1	Chrome	27980000
						Brushed Bronze	27980140
						Brushed Black Chrome	27980340
						Brushed Nickel	27980820
						Polished Gold Optic	27980990
						AXOR FinishPlus*	27980XXX
68/24	1	Rain	6.5	8	1	Chrome	27983000
						Brushed Bronze	27983140
						Brushed Black Chrome	27983340
						Brushed Nickel	27983820
						Polished Gold Optic	27983990
						AXOR FinishPlus*	27983XXX

Measurements within scale drawings are in mm.
Technical specifications and units of measure are subject to change.

AXOR Starck Shower bar 0.90 m with shower hose 1.60 m

Features of all variants

/ consists of: shower bar, shower hose, slider
/ pipe length: 985 mm
/ shower bar diameter: 25 mm
/ profile pipe: round
/ drilling distance: 915 mm
/ shower hose length: 1600 mm
/ suitable for: AXOR Starck baton hand shower and AXOR One hand shower
/ slider steplessly adjustable
/ metal hand shower holder

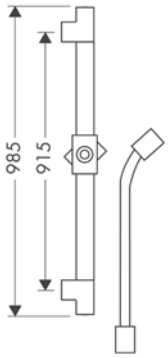

Length (m)	Shower hose length (mm)	Finish	Code no.
0,90	1600	Chrome	27830000
		Brushed Bronze	27830140
		Brushed Black Chrome	27830340
		Brushed Nickel	27830820
		Polished Gold Optic	27830990
		AXOR FinishPlus*	27830XXX

AXOR Uno Shower set 0.90 m with hand shower 120 3jet

Features of all variants

/ consists of: hand shower, shower bar, shower hose, slider
/ shower head size: 120 mm
/ spray type: Rain, RainAir, WhirlAir
/ convenient spray selection via Select button
/ QuickClean: Limescale deposits can simply be rubbed off with your finger
/ inclination angle can be adjusted by 30°
/ maximum flow rate at 3 bar: 13,4 l/min
/ minimum flow pressure: 1 bar
/ operating pressure: min. 1 bar/max. 10 bar
/ support for shower hose with conical nuts
/ wall supports of metal
/ wall bar type: wall bar 0.90 m
/ profile pipe: round
/ drilling distance: 915 mm
/ pivot connector prevents hose from tangling

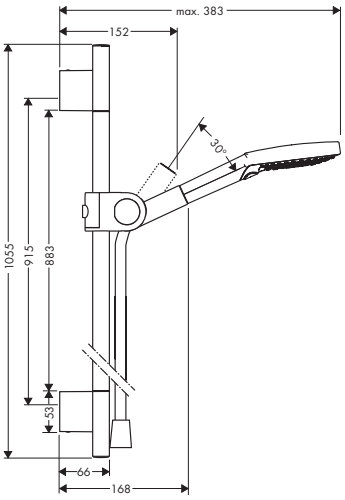

Technologies

Spray types

For more information about this product, please see the next page.

*AXOR FinishPlus: For further AXOR FinishPlus surfaces please see the AXOR FinishPlus overview on page 44.

AXOR Uno Shower set 0.90 m with hand shower 120 3jet

Drilling distance (mm)	Shower head size	Spray types	Function from (l/min)	Max. flow rate at 3 bar (l/min)	Min. flow pressure (bar)	Finish	Code no.
915	120	Rain, RainAir, WhirlAir	7.6	13.4	1	Chrome	27987000
						Brushed Bronze	27987140
						Brushed Black Chrome	27987340
						Brushed Nickel	27987820
						Polished Gold Optic	27987990
						AXOR FinishPlus*	27987XXX

Optional parts:		Finish	Code no.
	AXOR Uno Corner fitting set	Chrome	28693000
		AXOR FinishPlus*	28693XXX
	AXOR Uno Wall bar spacer	Light Grey	96397000
		AXOR FinishPlus*	96397XXX

AXOR Uno Shower bar 0.90 m with shower hose 1.60 m

Features of all variants

/ consists of: shower bar, shower hose, slider
/ shower bar diameter: 22 mm
/ profile pipe: round
/ drilling distance: 915 mm
/ shower hose length: 1600 mm
/ slider with locking mechanism
/ slider steplessly adjustable
/ metal hand shower holder

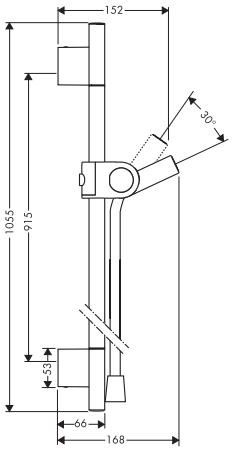

Length (m)	Shower hose length (mm)	Finish	Code no.
0,90	1600	Chrome	27989000
		Brushed Bronze	27989140
		Brushed Black Chrome	27989340
		Brushed Nickel	27989820
		Polished Gold Optic	27989990
		AXOR FinishPlus*	27989XXX

Optional parts:		Finish	Code no.
	AXOR Uno Corner fitting set	Chrome	28693000
		AXOR FinishPlus*	28693XXX
	AXOR Uno Wall bar spacer	Light Grey	96397000
		AXOR FinishPlus*	96397XXX

Measurements within scale drawings are in mm.
Technical specifications and units of measure are subject to change.

AXOR Citterio E Shower set 0.90 m with hand shower 120 3jet

Features of all variants

/ consists of: hand shower, shower bar, shower hose, slider
/ shower head size: 120 mm
/ spray type: Rain, RainAir, WhirlAir
/ convenient spray selection via Select button
/ QuickClean: Limescale deposits can simply be rubbed off with your finger
/ maximum flow rate at 3 bar: 13,4 l/min
/ minimum flow pressure: 1,4 bar
/ operating pressure: min. 1 bar/max. 6 bar
/ wall supports of metal
/ bar width: 30 mm
/ drilling distance: 915 mm
/ pivot connector prevents hose from tangling

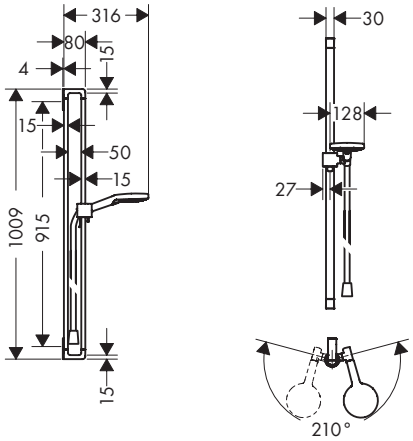

Technologies

Spray types

Drilling distance (mm)	Shower head size	Spray types	Function from (l/min)	Max. flow rate at 3 bar (l/min)	Min. flow pressure (bar)	Finish	Code no.
915	120	Rain, RainAir, WhirlAir	7.6	13.4	1.4	Chrome	36735000
						Brushed Bronze	36735140
						Brushed Black Chrome	36735340
						Brushed Nickel	36735820
						Polished Gold Optic	36735990
						AXOR FinishPlus*	36735XXX

Optional parts:		Finish	Code no.
	AXOR Universal Softsquare Cover for rail	Chrome	42871000
		Brushed Bronze	42871140
		Brushed Black Chrome	42871340
		Brushed Nickel	42871820
		Polished Gold Optic	42871990
		AXOR FinishPlus*	42871XXX

*AXOR FinishPlus: For further AXOR FinishPlus surfaces please see the AXOR FinishPlus overview on page 44.

AXOR Citterio E Shower bar 0.90 m with shower hose 1.60 m

Features of all variants

/ consists of: shower bar, shower hose, slider
/ pivot connector prevents hose from tangling
/ slider moves sideways,up/down and pivots
/ bar width: 30 mm
/ profile pipe: square
/ drilling distance: 915 mm
/ shower hose length: 1600 mm
/ support for shower hose with conical nuts
/ slider steplessly adjustable
/ silent inclination angle adjustment
/ wall supports of metal
/ metal hand shower holder

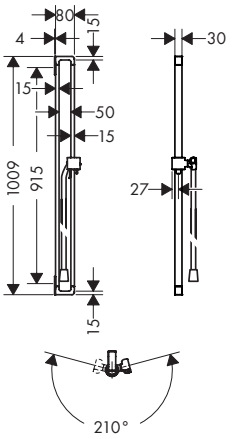

Length (m)	Shower hose length (mm)	Finish	Code no.
0,90	1600	Chrome	36736000
		Brushed Bronze	36736140
		Brushed Black Chrome	36736340
		Brushed Nickel	36736820
		Polished Gold Optic	36736990
		AXOR FinishPlus*	36736XXX

Optional parts:		Finish	Code no.
	AXOR Universal Softsquare Cover for rail	Chrome	42871000
		Brushed Bronze	42871140
		Brushed Black Chrome	42871340
		Brushed Nickel	42871820
		Polished Gold Optic	42871990
		AXOR FinishPlus*	42871XXX

Measurements within scale drawings are in mm.
Technical specifications and units of measure are subject to change.

AXOR Citterio Shower set 0.90 m with hand shower 120 3jet

Features of all variants

/ consists of: hand shower, shower bar, shower hose, slider
/ shower head size: 120 mm
/ spray type: Rain, RainAir, WhirlAir
/ convenient spray selection via Select button
/ QuickClean: Limescale deposits can simply be rubbed off with your finger
/ inclination angle can be adjusted by 30°
/ flow rate Rain spray at 3 bar: 13,3 l/min
/ maximum flow rate at 3 bar: 13,4 l/min
/ minimum flow pressure: 1,4 bar
/ operating pressure: min. 1 bar/max. 6 bar
/ support for shower hose with conical nuts
/ wall supports of metal
/ profile pipe: round
/ shower bar diameter: 22 mm
/ drilling distance: 915 mm
/ pivot connector prevents hose from tangling

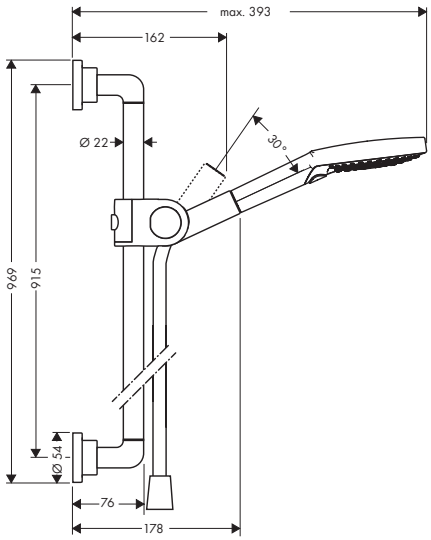

Technologies

Spray types

Shower head size	Spray types	Function from (l/min)	Max. flow rate at 3 bar (l/min)	Min. flow pressure (bar)	Finish	Code no.
120	Rain, RainAir, WhirlAir	7.6	13.4	1.4	Chrome	27991000
					Brushed Black Chrome	27991340
					AXOR FinishPlus*	27991XXX

AXOR Citterio Shower bar 0.90 m with shower hose 1.60 m

Features of all variants

/ consists of: shower bar, shower hose, slider
/ pivot connector prevents hose from tangling
/ pipe length: 969 mm
/ shower bar diameter: 22 mm
/ profile pipe: round
/ drilling distance: 915 mm
/ shower hose length: 1600 mm
/ slider with locking mechanism
/ wall supports of metal
/ metal hand shower holder

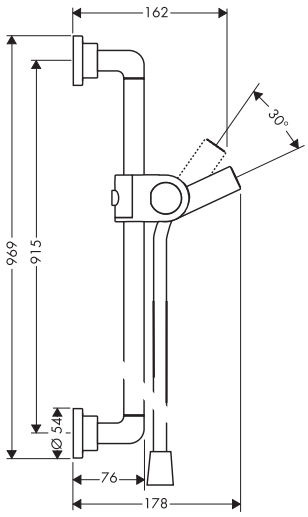

Length (m)	Shower hose length (mm)	Finish	Code no.
0,90	1600	Chrome	27831000
		Brushed Black Chrome	27831340
		AXOR FinishPlus*	27831XXX

*AXOR FinishPlus: For further AXOR FinishPlus surfaces please see the AXOR FinishPlus overview on page 44.

AXOR Montreux Shower set 0.90 m with hand shower 100 1jet

Features of all variants

/ consists of: hand shower, shower bar, shower hose, slider
/ shower head size: 100 mm
/ spray type: RainAir
/ QuickClean: Limescale deposits can simply be rubbed off with your finger
/ maximum flow rate at 3 bar: 16 l/min
/ minimum flow pressure: 1 bar
/ operating pressure: min. 1 bar/max. 6 bar
/ support for shower hose with conical nuts
/ wall supports of metal
/ profile pipe: round
/ shower bar diameter: 22 mm
/ drilling distance: 800 mm

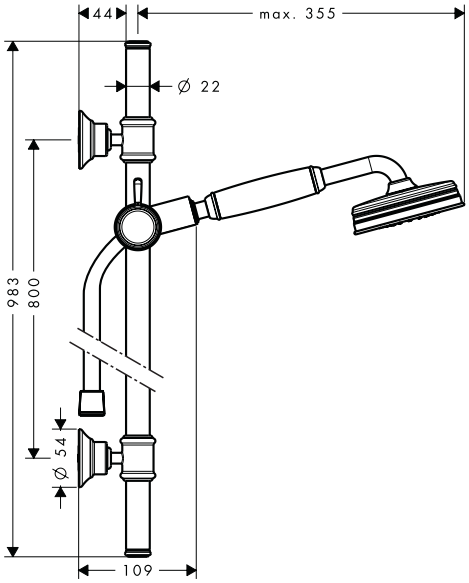

Technologies

AirPower
Quick Clean

Spray types

RainAir

Drilling distance (mm)	Shower head size	Spray types	Function from (l/min)	Max. flow rate at 3 bar (l/min)	Min. flow pressure (bar)	Finish	Code no.
800	100	RainAir	7.3	16	0.9	Chrome	27982000
						Brushed Black Chrome	27982340
						Brushed Nickel	27982820
						AXOR FinishPlus*	27982XXX

Optional parts:		Finish	Code no.
	AXOR Montreux Corner basket 160/83	Chrome	42066000
		Brushed Black Chrome	42066340
		Brushed Nickel	42066820
		AXOR FinishPlus*	42066XXX

AXOR Starck Shower holder

Features

/ fixed holding position
/ for hoses with cylindrical nuts
/ material: metal
/ conical mount

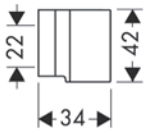

Finish	Code no.
Chrome	27515000
Brushed Bronze	27515140
Brushed Black Chrome	27515340
Brushed Nickel	27515820
Polished Gold Optic	27515990
AXOR FinishPlus*	27515XXX

Measurements within scale drawings are in mm.
Technical specifications and units of measure are subject to change.

AXOR Citterio Shower holder round

Features

/ fixed holding position
/ for shower hoses with conical nut
/ material: metal
/ dimensions: 60 x 60 x 65 mm (HxWxD)
/ diameter drill hole: 6 mm
/ 2 drill holes
/ conical mount

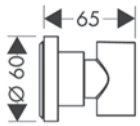

Finish	Code no.
Chrome	39525000
Brushed Bronze	39525140
Brushed Black Chrome	39525340
Brushed Nickel	39525820
Polished Gold Optic	39525990
AXOR FinishPlus*	39525XXX

AXOR Montreux Shower holder

Features

/ fixed holding position
/ for shower hoses with conical nut
/ material: metal
/ dimensions: 68 x 68 x 84 mm (HxWxD)
/ diameter drill hole: 6 mm
/ 2 drill holes
/ conical mount

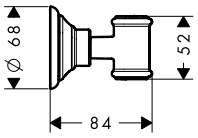

Finish	Code no.
Chrome	16325000
Brushed Black Chrome	16325340
Brushed Nickel	16325820
AXOR FinishPlus*	16325XXX

AXOR One Shower holder

Features

/ fixed holding position
/ for hoses with cylindrical nuts
/ dimensions: 60 x 36 x 51 mm (HxWxD)
/ material: metal
/ conical mount

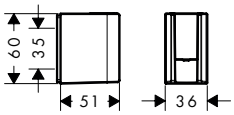

Finish	Code no.
Chrome	45721000
Brushed Bronze	45721140
Brushed Black Chrome	45721340
Brushed Nickel	45721820
Polished Gold Optic	45721990
AXOR FinishPlus*	45721XXX

*AXOR FinishPlus: For further AXOR FinishPlus surfaces please see the AXOR FinishPlus overview on page 44.

AXOR Wall outlet Fine Wall outlets with non-return valve

Features of all variants

/ metal connection angle
/ material escutcheon: metal
/ non-return-valve
/ connection type: G ½

round

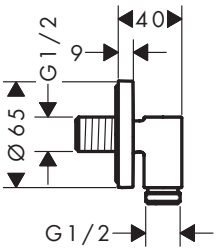

square

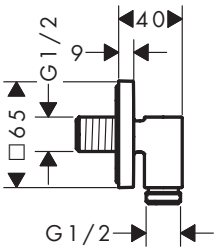

softsquare

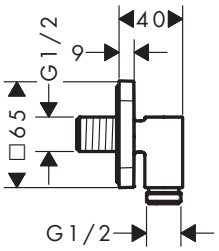

Overview variants

Shape	Finish	Code no.
round	Chrome	36737000
	Brushed Bronze	36737140
	Brushed Black Chrome	36737340
	Matt Black	36737670
	Matt White	36737700
	Brushed Nickel	36737820
	Polished Gold Optic	36737990
	AXOR FinishPlus*	36737XXX
square	Chrome	36738000
	Brushed Bronze	36738140
	Brushed Black Chrome	36738340
	Matt Black	36738670
	Matt White	36738700
	Brushed Nickel	36738820
	Polished Gold Optic	36738990
	AXOR FinishPlus*	36738XXX
softsquare	Chrome	36739000
	Brushed Bronze	36739140
	Brushed Black Chrome	36739340
	Matt Black	36739670
	Matt White	36739700
	Brushed Nickel	36739820
	Polished Gold Optic	36739990
	AXOR FinishPlus*	36739XXX

Measurements within scale drawings are in mm.
Technical specifications and units of measure are subject to change.

AXOR Starck Wall outlet round with non-return-valve

Features

/ metal connection angle
/ connection type: G ½
/ non-return-valve

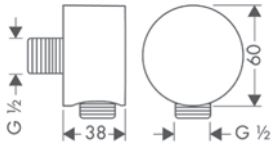

Finish	Code no.
Chrome	27451000
Brushed Bronze	27451140
Brushed Black Chrome	27451340
Brushed Nickel	27451820
Polished Gold Optic	27451990
AXOR FinishPlus*	27451XXX

AXOR Montreux Wall outlet with non-return valve

Features

/ metal connection angle
/ connection type: G ½
/ non-return-valve

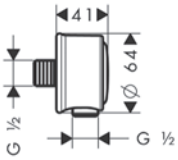

Finish	Code no.
Chrome	16884000
Brushed Black Chrome	16884340
Brushed Nickel	16884820
AXOR FinishPlus*	16884XXX

AXOR ShowerSolutions Textile shower hoses

Features of all variants

/ high-quality textile hose with braiding
/ pivot connector prevents hose from tangling
/ kink-protected
/ water-resistant and water-repellant material
/ yarns are made of recycled PET
/ unique design with multi-colored braided yarns
/ warm, cotton-like material feels great to the skin
/ dishwasher proof up to 60 °C
/ connection thread: G ½

conical and cylindrical nut

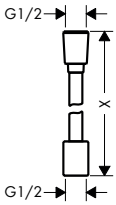

cylindrical nut on both sides

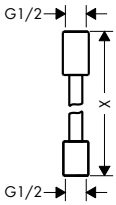

For more information about this product, please see the next page.

*AXOR FinishPlus: For further AXOR FinishPlus surfaces please see the AXOR FinishPlus overview on page 44.

AXOR ShowerSolutions Textile shower hoses

Overview variants

Nuts shower hose	Length (m)	Finish	Code no.
1x conical, 1x cylindrical	2,00	Chrome	28290000
		Brushed Bronze	28290140
		Brushed Gold Optic	28290250
		Polished Red Gold	28290300
		Brushed Red Gold	28290310
		Polished Black Chrome	28290330
		Brushed Black Chrome	28290340
		Matt Black	28290670
		Matt White	28290700
		Stainless Steel Optic	28290800
		Brushed Nickel	28290820
		Brushed Brass	28290950
		Polished Gold Optic	28290990
1x conical, 1x cylindrical	1,60	Chrome	28259000
		Brushed Bronze	28259140
		Brushed Gold Optic	28259250
		Polished Red Gold	28259300
		Brushed Red Gold	28259310
		Polished Black Chrome	28259330
		Brushed Black Chrome	28259340
		Matt Black	28259670
		Matt White	28259700
		Stainless Steel Optic	28259800
		Brushed Nickel	28259820
		Brushed Brass	28259950
		Polished Gold Optic	28259990
1x conical, 1x cylindrical	1,25	Chrome	28227000
		Brushed Bronze	28227140
		Brushed Gold Optic	28227250
		Polished Red Gold	28227300
		Brushed Red Gold	28227310
		Polished Black Chrome	28227330
		Brushed Black Chrome	28227340
		Matt Black	28227670
		Matt White	28227700
		Stainless Steel Optic	28227800
		Brushed Nickel	28227820
		Brushed Brass	28227950
		Polished Gold Optic	28227990

Measurements within scale drawings are in mm.
Technical specifications and units of measure are subject to change.

AXOR ShowerSolutions Textile shower hoses

Overview variants

Nuts shower hose	Length (m)	Finish	Code no.
cylindrical on both sides	2,00	Chrome	28291000
		Brushed Bronze	28291140
		Brushed Gold Optic	28291250
		Polished Red Gold	28291300
		Brushed Red Gold	28291310
		Polished Black Chrome	28291330
		Brushed Black Chrome	28291340
		Matt Black	28291670
		Matt White	28291700
		Stainless Steel Optic	28291800
		Brushed Nickel	28291820
		Brushed Brass	28291950
		Polished Gold Optic	28291990
cylindrical on both sides	1,60	Chrome	28261000
		Brushed Bronze	28261140
		Brushed Gold Optic	28261250
		Polished Red Gold	28261300
		Brushed Red Gold	28261310
		Polished Black Chrome	28261330
		Brushed Black Chrome	28261340
		Matt Black	28261670
		Matt White	28261700
		Stainless Steel Optic	28261800
		Brushed Nickel	28261820
		Brushed Brass	28261950
		Polished Gold Optic	28261990
cylindrical on both sides	1,25	Chrome	28228000
		Brushed Bronze	28228140
		Brushed Gold Optic	28228250
		Polished Red Gold	28228300
		Brushed Red Gold	28228310
		Polished Black Chrome	28228330
		Brushed Black Chrome	28228340
		Matt Black	28228670
		Matt White	28228700
		Stainless Steel Optic	28228800
		Brushed Nickel	28228820
		Brushed Brass	28228950
		Polished Gold Optic	28228990

*AXOR FinishPlus: For further AXOR FinishPlus surfaces please see the AXOR FinishPlus overview on page 44.

/ AXOR Starck Metal effect shower hoses

Features of all variants

/ high-quality shower hose with metal effect
/ with plastic coating, easy to clean
/ pivot connector prevents hose from tangling
/ kink-protected
/ connection thread: G ½

conical nut on both sides

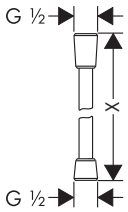

cylindrical nut on both sides

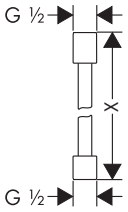

Certificates/declarations

EPD

Overview variants

Nuts shower hose	Length (m)	Finish	Code no.
conical on both sides	2,00	Chrome	28624000
		Brushed Bronze	28624140
		Brushed Black Chrome	28624340
		Matt Black	28624670
		Brushed Nickel	28624820
		Polished Gold Optic	28624990
		AXOR FinishPlus*	28624XXX
conical on both sides	1,60	Chrome	28626000
		Brushed Bronze	28626140
		Brushed Black Chrome	28626340
		Matt Black	28626670
		Brushed Nickel	28626820
		Polished Gold Optic	28626990
		AXOR FinishPlus*	28626XXX
conical on both sides	1,25	Chrome	28622000
		Brushed Bronze	28622140
		Brushed Black Chrome	28622340
		Matt Black	28622670
		Brushed Nickel	28622820
		Polished Gold Optic	28622990
		AXOR FinishPlus*	28622XXX
cylindrical on both sides	2,00	Chrome	28284000
		Brushed Bronze	28284140
		Brushed Black Chrome	28284340
		Brushed Nickel	28284820
		Polished Gold Optic	28284990
		AXOR FinishPlus*	28284XXX

Measurements within scale drawings are in mm.
Technical specifications and units of measure are subject to change.

/ AXOR Starck Metal effect shower hoses

Overview variants

Nuts shower hose	Length (m)	Finish	Code no.
cylindrical on both sides	1,60	Chrome	28286000
		Brushed Bronze	28286140
		Brushed Black Chrome	28286340
		Matt Black	28286670
		Matt White	28286700
		Brushed Nickel	28286820
		Polished Gold Optic	28286990
		AXOR FinishPlus*	28286XXX
cylindrical on both sides	1,25	Chrome	28282000
		Brushed Bronze	28282140
		Brushed Black Chrome	28282340
		Matt Black	28282670
		Matt White	28282700
		Brushed Nickel	28282820
		Polished Gold Optic	28282990
		AXOR FinishPlus*	28282XXX

Metal shower hoses

Features of all variants

/ metal shower hose
/ pivot joints on both sides
/ kink-protected
/ nuts shower hose: conical nut on both ends
/ connection thread: G ½

2,00/1,60/1,25 m

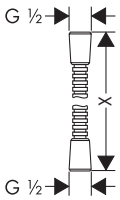

Certificates/declarations

Overview variants

Length (m)	Finish	Code no.
2,00	Chrome	28120000
	Brushed Black Chrome	28120340
	Brushed Nickel	28120820
	AXOR FinishPlus*	28120XXX
1,60	Chrome	28116000
	Brushed Black Chrome	28116340
	Brushed Nickel	28116820
	AXOR FinishPlus*	28116XXX
1,25	Chrome	28112000
	Brushed Black Chrome	28112340
	Brushed Nickel	28112820
	AXOR FinishPlus*	28112XXX

*AXOR FinishPlus: For further AXOR FinishPlus surfaces please see the AXOR FinishPlus overview on page 44.

Shower columns

Showerpipes

AXOR SHOWER SYSTEMS

Harmony in unity

AXOR Shower Systems

AXOR Shower pipes and shower columns unify thermostatic mixers, overhead showers and hand showers in one elegant arrangement. Whether collection-specific or standalone, each integrated system combines innovative spray-types with intuitive outlet control. Harmonizing with any existing decor, the systems are available in many exclusive AXOR FinishPlus surfaces.

Design: Philippe Starck, PHOENIX, Front, Barber Osgerby

Characteristic design feature:

Innovative shower systems for combination across different collections.

The designer's idea:

Combination of shower control, overhead shower and hand shower for maximum shower comfort.

Special program highlights:

/ AXOR Starck Nature shower column: brings the iconic design of the popular AXOR Starck shower column to the outdoors

/ AXOR One Showerpipe: minimalist in design

/ AXOR Showerpipe designed by Front: An object in authentic industrial design language

/ AXOR Montreux Showerpipe: modern technology in classic design

→ Learn more about AXOR Shower Systems: axor-design.com

A luxurious shower experience for indoors and outdoors with the AXOR Starck shower column

The minimalist in the shower. Uncompromisingly streamlined, the shapes come together to form a unique whole: a circle. A cylinder. A rod. The result is a one-of-a-kind shower column – now also for outdoor use.

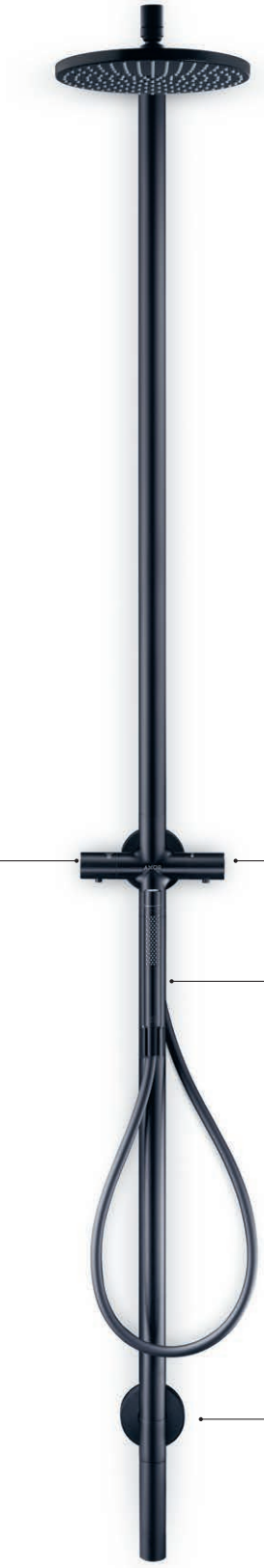

AXOR overhead shower 240 1jet

/ High-quality metal disc with generous diameter (240 mm)

/ Enveloping PowderRain spray

/ With user-friendly QuickClean cleaning function

/ Switching between overhead and hand showers and integrated volume control

/ Indoor version: Thermostat with scalding protection at 40 °C

/ Outdoor version: MR32 mixing cartridge for temperature control

AXOR baton hand shower 2jet

/ A classic in design and function. The baton hand shower sets the standard for innovative control: simple rotation allows users to switch between the soft Rain spray and the powerful MonoRain spray

/ Positioned in a high quality metal holder

/ The shower column pipe makes it seem as if the water is coming directly out of the floor

/ Indoor version: Basic set (#10902180) for the shower column positioned behind the wall flange

/ Outdoor version: Adapter set for quick and easy installation and removal, as well as for fast draining

AXOR Starck Nature Shower.
Luxurious shower experience for the outdoors.

The AXOR Starck Nature Shower offers all the comfort, convenience, and luxury of the AXOR Starck collection in two versions suitable for outdoor use, one with a hand shower. Equipped with PowderRain technology, the AXOR Starck Nature Shower overhead shower envelops the user in a spray of ultra-fine water droplets. The cylindrical handles allow precise control of water temperature and flow rate. The AXOR Starck Nature Shower can be installed on a variety of individually selected materials, from glass to stone and metal to wood.

Perfect purism in shower design

The AXOR Showerpipe 800 provides an integrated system solution, consisting of a thermostatic mixer, overhead shower and hand shower, all in the purist pipework design of the AXOR Uno collection. Select technology allows for easy operation of the Showerpipe with its integrated AXOR overhead shower 350 1jet and innovative PowderRain spray mode.

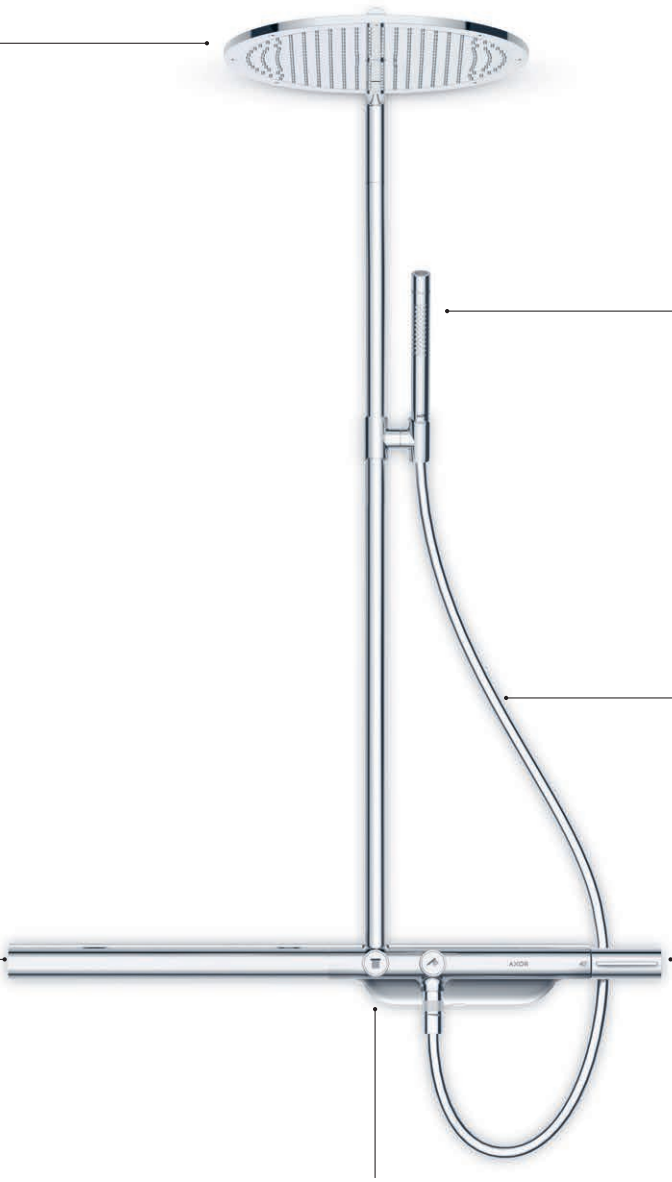

AXOR overhead shower 350 1jet

/ Overhead shower made of pure, high-quality metal

/ Maximum flexibility with a shower arm that swivels 70°

/ The innovative PowderRain spray mode envelops the body in a cocoon of velvety softness

/ With the QuickClean function

/ Flow rate: 22 l/min (at 3 bar)

AXOR baton hand shower 2jet

/ Spray modes: Rain, MonoRain

/ Positioned in a high-quality, height-adjustable metal slider. Angle can be adjusted in a range of 90°. Swivels left/right and up/down

Shower hose with volume control

/ Makes it easy to adjust the water flow for the 2jet baton hand shower

AXOR thermostatic mixer 800

/ Perfectly integrated into the product design with a generously sized shelf surface made of sturdy safety glass

Temperature control

/ With integrated safety lock at 40°C

/ Hot water limiter can be set individually

Select buttons

/ For intuitive, user-friendly outlet control with clear function assignment

/ Two outlets (overhead shower and hand shower) can be used simultaneously

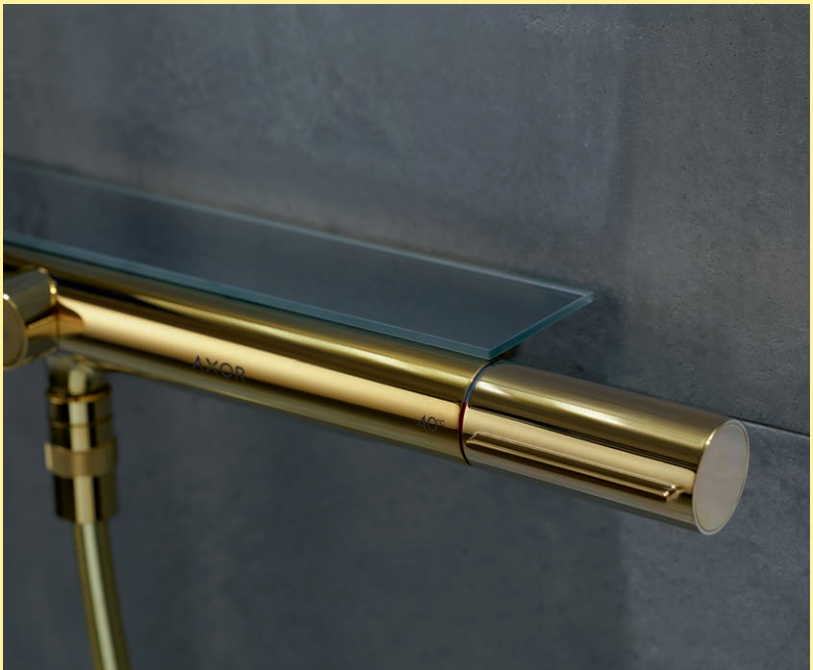
AXOR

All-in-one shower solution

The AXOR One showerpipe is the perfect all-in-one combination of overhead shower, hand shower, wall bar and wall outlet. The showerpipe and shower set offer a clean appearance thanks to their integrated wall outlet. The entire collection can be personalized in Matt Black or an exclusive AXOR FinishPlus surface.

Immersive shower experience

The showerpipe is equipped with the overhead shower 280 1jet and includes the innovative spray combination of Rain (outer ring) and PowderRain (inner ring). Flow rate: 15 l/min (at 3 bar)

Swivel shower arm

Flexible adjustment of overhead shower for individual use of space

Metal hand shower

Of long-lasting quality. Includes the PowderRain spray type with an efficient flow rate of just 9 l/min (at 3 bar)

Shower holder with height-adjustable metal slider

/ The shower slider swivels left/right and up/down, and can be adjusted up to 90°

/ Allows for individual positioning of the hand shower depending on personal preference

Integrated wall outlet

/ In keeping with the all-in-one ethos: The wall outlet, usually a separate component, has been integrated into the showerpipe for a cleaner appearance

A suggested combination

The AXOR One thermostatic module for 2 functions (#45712, -000, -670, -xxx) offers a consistent and concealed shower solution

A design object with industrial character

Featuring a funnel-shaped overhead and hand shower, the AXOR showerpipe designed by Front has nothing to hide. Pipes, sockets, valves – all elements typical of industrial design are deliberately exposed instead of hidden behind the wall. A shower pipe with industrial character.

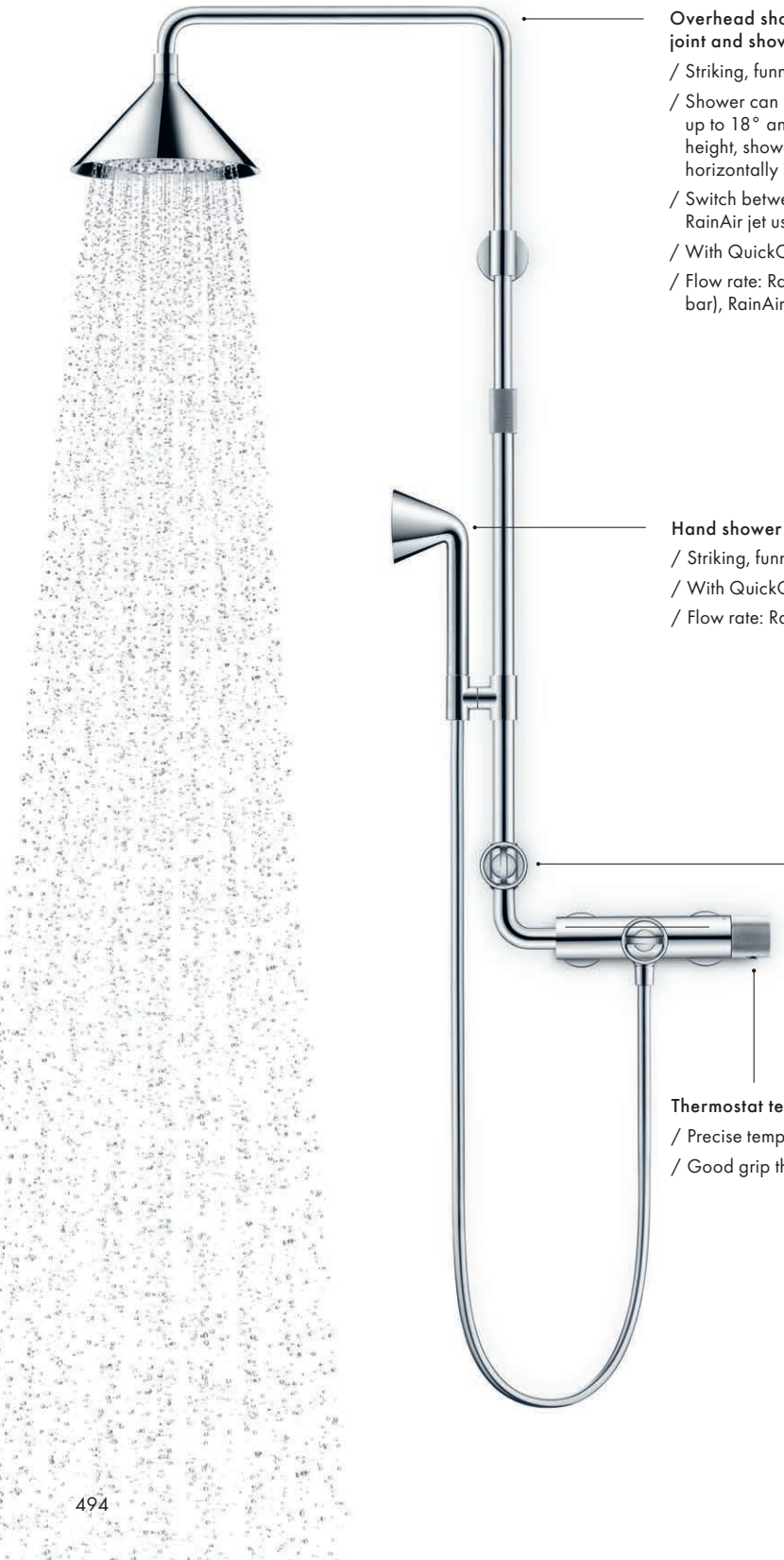

Overhead shower with ball joint and shower arm

/ Striking, funnel-shaped design

/ Shower can be adjusted by up to 18° and by 300 mm in height, shower arm can swivel horizontally in a range of 160°

/ Switch between Rain jet and RainAir jet using the Select button

/ With QuickClean function

/ Flow rate: Rain jet 15 l/min (at 3 bar), RainAir jet 14 l/min (at 3 bar)

Hand shower

/ Striking, funnel-shaped design

/ With QuickClean function

/ Flow rate: Rain jet 9 l/min (at 3 bar)

Valve handles

/ Intuitive operation: vertical position means 'on', horizontal position means 'off'

/ Separate operation of overhead and hand shower

/ Good grip thanks to knurled surface

Thermostat technology

/ Precise temperature pre-setting

/ Good grip thanks to knurled surface

Modern functionality – authentic in design

Authentic showering. The AXOR Montreux Showerpipe. Externally: Belle Époque. Internally: state of the art. With cutting-edge thermostat technology. And clearly separate control units for its overhead and hand showers. Committed to technological advancement. Just as in the Belle Époque era.

Flexible positioning

Shower arm swivel in a range of 160° for flexible overhead shower positioning

Overhead shower 240 1jet Classic (# 28474 000)

/ Included in scope of delivery

/ Fully chrome-plated spray discs allow individualization with one of many AXOR FinishPlus PVD surfaces

Hand shower 100 1jet (# 16320000) and metal shower hose 1.60 m (# 28116000)

/ Included in scope of delivery

Individualized height setting

Height-adjustable hand shower holder makes it easy to adapt to various body sizes

Thermostatic mixer

/ Temperature setting with safety lock at 40°C and adjustable hot water limiter

Intuitive outlet operation

/ Valve for overhead shower on vertical pipe

/ Valve for hand shower on hose connection

/ Both outlets can be used simultaneously

AXOR Starck Shower column with thermostat and overhead shower 240 1jet

Features of all variants

/ consists of: shower column, overhead shower, baton hand shower, shower thermostat, shower hose
/ shower head size: 240 mm
/ overhead shower 240 1jet
/ spray type overhead shower: PowderRain
/ function from: 6,6 l/min
/ maximum flow rate for shower column at 3 bar: 12,2 l/min
/ flow rate PowderRain spray at 3 bar: 11,3 l/min
/ spray type hand shower: Rain, MonoRain
/ flow rate of hand shower at 3 bar: 12,2 l/min
/ minimum flow pressure: 1 bar
/ max. operating pressure: 10 bar
/ outlets controlled via turning handle
/ protection against scalding: at 40 °C
/ hot water restriction
/ suitable for continuous flow water heaters
/ installation: wall-mounted
/ connection dimension: DN15
/ exposed installation
/ non-return valve
/ 2 functions

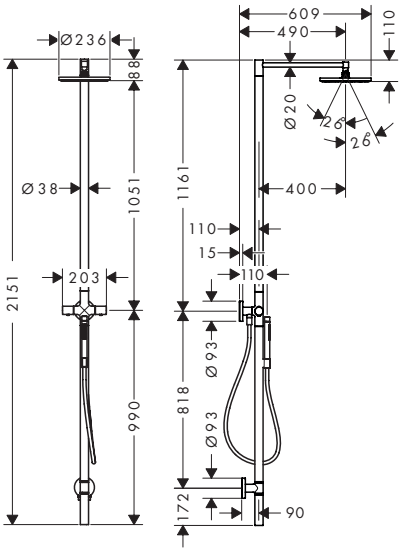

Technologies

Spray types

Shower head size	Spray types	Function from (l/min)	Max. flow rate at 3 bar (l/min)	Min. flow pressure (bar)	Finish	Code no.
240	PowderRain	6.6	12.2	1	Chrome	12672000
					Brushed Black Chrome	12672340
					Matt Black	12672670
					Stainless Steel Optic	12672800
					AXOR FinishPlus*	12672XXX

Required parts:		Code no.
	Basic set for Showerpipe/ shower column	10902180

Optional parts:		Code no.
	AXOR Starck Extension set 28 mm for shower columns	10980000
	AXOR Starck Seal	96660000

Measurements within scale drawings are in mm.
Technical specifications and units of measure are subject to change.

AXOR Starck Nature shower columns 240 1jet

Features of all variants

/ shower head size: 240 mm
/ overhead shower 240 1jet
/ spray type overhead shower: PowderRain
/ minimum flow pressure: 1 bar
/ max. operating pressure: 10 bar
/ ceramic cartridge
/ suitable for continuous flow water heaters
/ installation: installation on free-standing wall
/ connection dimension: DN15
/ connection type: G ½
/ exposed installation
/ non-return valve
/ easy drainage system by removing the check valves to empty the product
/ installation area: outdoor
/ in case of wintering/danger of frost: The product must be completely dismantled, emptied and stored in a dry place. All components must no longer contain water.
/ the water connection of the product must be accessible

with hand shower

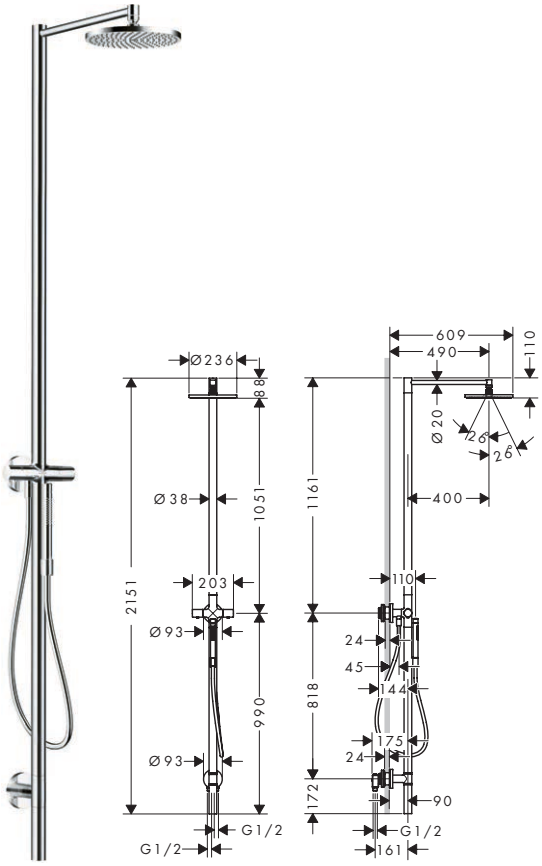

without hand shower

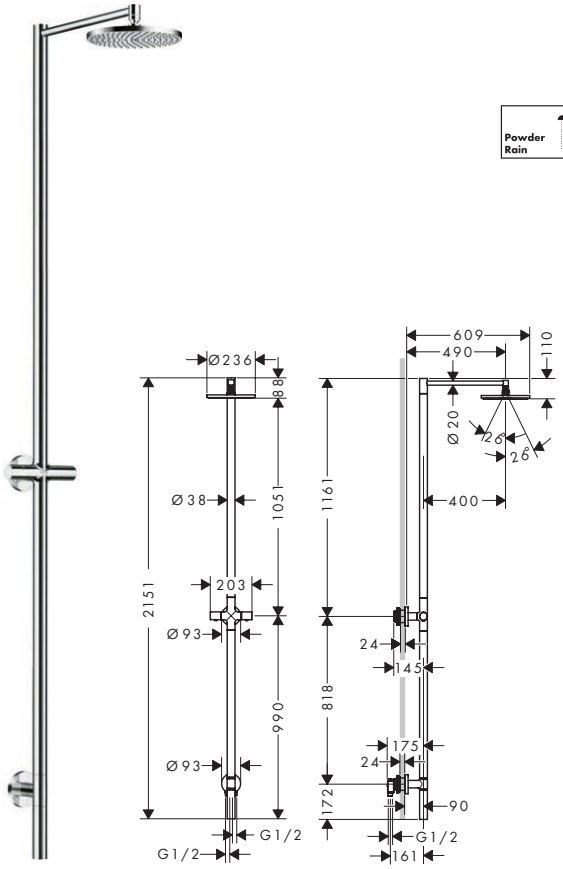

Technologies

Quick Clean

Spray types

Powder Rain | Rain | Mono Rain

Overview variants

Shower head size	Spray types overhead shower	Hand shower	Spray types hand shower	Max. flow rate at 3 bar (l/min)	Min. flow pressure (bar)	Finish	Code no.
240	PowderRain	2jet	Rain, MonoRain	13.2	1	Matt Black	12670670
						Brushed Black Chrome	12670340
						Stainless Steel Optic	12670800
						AXOR FinishPlus*	12670XXX
240	PowderRain	without hand shower		12.2	1	Matt Black	12671670
						Brushed Black Chrome	12671340
						Stainless Steel Optic	12671800
						AXOR FinishPlus*	12671XXX

Optional parts:		Code no.
	AXOR Starck Extension set 80 mm	13608000
	AXOR Starck Cover for water supply	12675000

*AXOR FinishPlus: For further AXOR FinishPlus surfaces please see the AXOR FinishPlus overview on page 44.

AXOR ShowerSolutions Showerpipe with thermostat 800 and overhead shower 350 1jet

Features of all variants

/ consists of: overhead shower, baton hand shower, shower thermostat, shower hose, shower holder, shower bar
/ overhead shower AXOR overhead shower 350 1jet
/ shower head size overhead shower: 350 mm
/ spray type overhead shower: PowderRain
/ shelf made of safety glass
/ surface shelf: chrome
/ flow rate PowderRain spray at 3 bar: 20 l/min
/ spray type hand shower: Rain, MonoRain
/ flow rate of hand shower at 3 bar: 12 l/min
/ maximum flow rate for Showerpipe at 3 bar: 24 l/min
/ minimum flow pressure: 1 bar
/ max. operating pressure: 10 bar
/ 90° position adjustable slider, pivots left and right, up and down
/ shower arm length overhead shower: 400 mm
/ swivel shower arm: swivelling shower arm
/ thermostat AXOR 800
/ SafetyStop at 40°C
/ adjustable hot water limitation
/ convenient diversion via Select button
/ simultaneous utilization of 2 functions
/ suitable for continuous flow water heaters
/ mounting type: exposed installation
/ connection dimension: DN15
/ connection thread: G ½
/ centre distance: 150 ± 12 mm
/ intrinsically safe against backflow
/ shower bar diameter: 25 mm
/ 2 functions

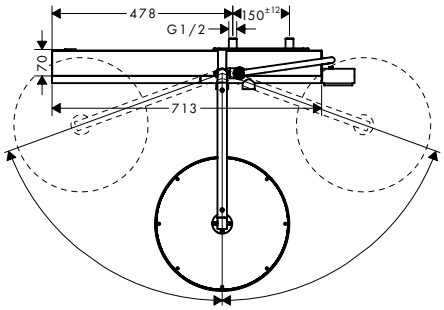

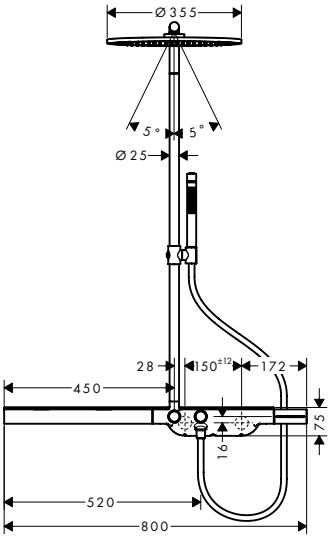

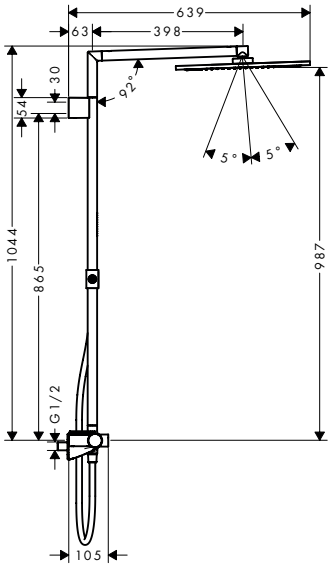

Technologies

Spray types

Shower head size	Spray types	Function from (l/min)	Max. flow rate at 3 bar (l/min)	Min. flow pressure (bar)	Thermostat	Finish	Code no.
350	PowderRain	14.3	24	1	AXOR 800	Chrome	27984000
						AXOR FinishPlus*	27984XXX

Measurements within scale drawings are in mm.
Technical specifications and units of measure are subject to change.

AXOR One Showerpipes 1jet with thermostat

Features of all variants

/ consists of: overhead shower, hand shower, slider, shower thermostat, shower hose, shower bar
/ overhead shower AXOR One 280 1jet
/ shower head size overhead shower: 280 mm
/ spray type overhead shower: PowderRain and Rain in combination
/ spray type hand shower: PowderRain
/ max. operating pressure: 10 bar
/ ball-joint: overhead shower angle adjustable
/ height-adjustable slider
/ swivel shower arm: swivelling shower arm
/ SafetyStop at 40 °C
/ temperature and water flow control
/ mounting type: exposed installation
/ connection thread: G ½
/ intrinsically safe against backflow
/ 2 functions

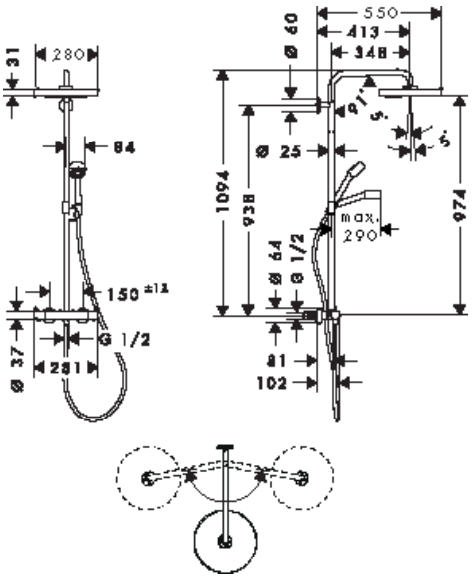

Special feature

Technologies

Spray types

Overview variants

Shower head size	Number of sprays	Spray types	Min. flow pressure (bar)	Function from (l/min)	Max. flow rate at 3 bar (l/min)	Finish	Code no.
280	1	PowderRain and Rain in combination	1	6	8	Chrome	48795000
						Brushed Bronze	48795140
						Brushed Black Chrome	48795340
						Matt Black	48795670
						Brushed Brass	48795950
						Polished Gold Optic	48795990
						AXOR FinishPlus*	48795XXX
280	1	PowderRain and Rain in combination	1.7	8.8	13.2	Chrome	48794000
						Brushed Bronze	48794140
						Brushed Black Chrome	48794340
						Matt Black	48794670
						Brushed Brass	48794950
						Polished Gold Optic	48794990
						AXOR FinishPlus*	48794XXX

*AXOR FinishPlus: For further AXOR FinishPlus surfaces please see the AXOR FinishPlus overview on page 44.

AXOR One Showerpipes 1jet with thermostat

Features of all variants

/ consists of: overhead shower, hand shower, slider, shower thermostat, shower hose, shower bar
/ overhead shower AXOR One 280 1jet
/ shower head size overhead shower: 280 mm
/ spray type overhead shower: PowderRain and Rain in combination
/ spray type hand shower: PowderRain
/ minimum flow pressure: 0,9 bar max.
/ max. operating pressure: 10 bar
/ ball-joint: overhead shower angle adjustable
/ height-adjustable slider
/ swivel shower arm: swivelling shower arm
/ SafetyStop at 40°C
/ temperature and water flow control
/ mounting type: concealed
/ connection type: basic set
/ connection thread: G ½
/ intrinsically safe against backflow
/ 2 functions

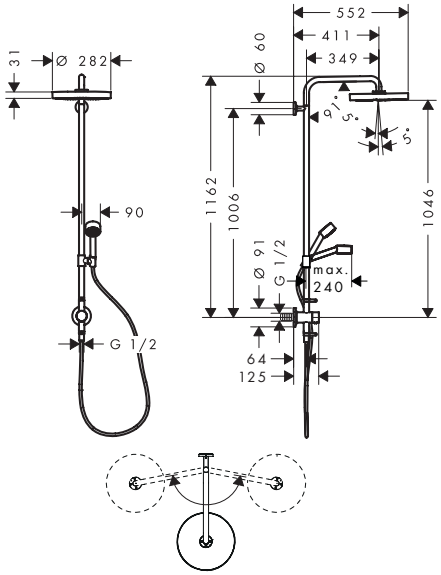

Special feature

EcoSmart
Water Flow Control

Technologies

Thermostat
Safety Stop

Spray types

Powder Rain

Overview variants

Shower head size	Number of sprays	Spray types	Function from (l/min)	Max. flow rate at 3 bar (l/min)	Min. flow pressure (bar)	Finish	Code no.
280	1	PowderRain and Rain in combination	6.2	8	0.9	Chrome	48797000
						Brushed Bronze	48797140
						Brushed Black Chrome	48797340
						Matt Black	48797670
						Brushed Brass	48797950
						Polished Gold Optic	48797990
						AXOR FinishPlus*	48797XXX
280	1	PowderRain and Rain in combination	8.8	12	0.9	Chrome	48796000
						Brushed Bronze	48796140
						Brushed Black Chrome	48796340
						Matt Black	48796670
						Brushed Brass	48796950
						Polished Gold Optic	48796990
						AXOR FinishPlus*	48796XXX

Required parts:	Code no.
Basic set for Showerpipe/ shower column	10902180

Measurements within scale drawings are in mm.
Technical specifications and units of measure are subject to change.

AXOR One Showerpipe 280 1jet for concealed installation

Features of all variants

/ consists of: overhead shower, hand shower, slider, wall outlet, shower hose, shower bar
/ overhead shower AXOR One 280 1jet
/ shower head size overhead shower: 280 mm
/ spray type overhead shower: PowderRain and Rain in combination
/ requires a mixer for 2 functions
/ spray type hand shower: PowderRain
/ flow rate of hand shower at 3 bar: 8,3 l/min
/ maximum flow rate for Showerpipe at 3 bar: 12,7 l/min
/ minimum flow pressure: 2 bar
/ max. operating pressure: 10 bar
/ ball-joint: overhead shower angle adjustable
/ shower holder inclination angle can be adjusted continously
/ mounting type: concealed
/ shower bar diameter: 25 mm
/ height-adjustable slider
/ swivel shower arm: swivelling shower arm
/ connection dimension: DN15

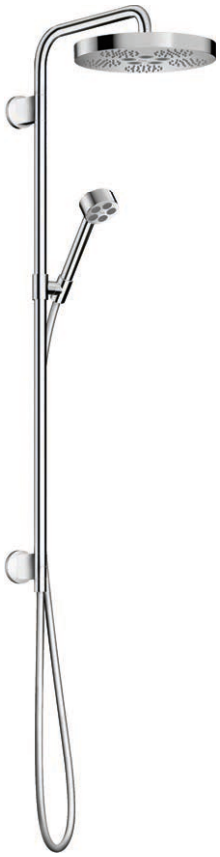

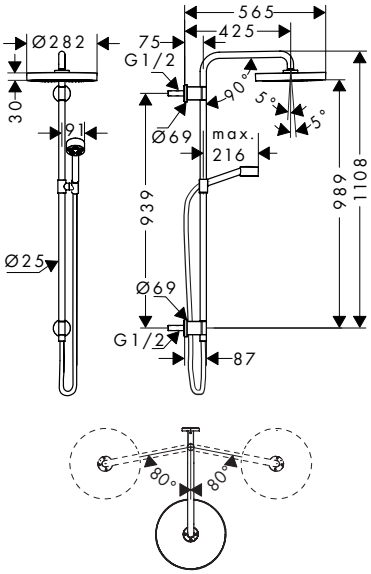

Technologies

Spray types

Shower head size	Number of sprays	Spray types	Function from (l/min)	Max. flow rate at 3 bar (l/min)	Min. flow pressure (bar)	Finish	Code no.
280	1	PowderRain and Rain in combination	8.8	12.7	2	Chrome	48790000
						Brushed Bronze	48790140
						Brushed Black Chrome	48790340
						Matt Black	48790670
						Matt White	48790700
						Brushed Brass	48790950
						Polished Gold Optic	48790990
						AXOR FinishPlus*	48790XXX

Required parts:	Code no.
AXOR One Basic set for Showerpipe	48798180

Optional parts:	Finish	Code no.
AXOR One Thermostatic module for concealed installation for 2 functions	Chrome	45712000
	Brushed Bronze	45712140
	Brushed Black Chrome	45712340
	Matt Black	45712670
	Matt White	45712700
	Brushed Brass	45712950
	Polished Gold Optic	45712990
	AXOR FinishPlus*	45712XXX

*AXOR FinishPlus: For further AXOR FinishPlus surfaces please see the AXOR FinishPlus overview on page 44.

AXOR Showers/Front Showerpipe with thermostat and overhead shower 240 2jet

Features of all variants

/ consists of: overhead shower, hand shower, shower thermostat, shower hose, slider, shower bar
/ shower head size overhead shower: 279 mm
/ spray type overhead shower: Rain, RainAir
/ individually height adjustable shower head with easy-to-use twist lock. Adjustment 300 mm
/ flow rate RainAir spray at 3 bar: 14 l/min
/ spray type hand shower: Rain
/ flow rate of hand shower at 3 bar: 8 l/min
/ maximum flow rate for Showerpipe at 3 bar: 21 l/min
/ minimum flow pressure: 1 bar
/ max. operating pressure: 10 bar
/ convenient spray selection via Select button
/ ball-joint: overhead shower angle adjustable
/ height-adjustable slider
/ shower arm length overhead shower: 470 mm
/ swivelling shower arm
/ SafetyStop at 40 °C
/ adjustable hot water limitation
/ outlets controlled via turning handle
/ suitable for continuous flow water heaters
/ mounting type: exposed installation
/ connection dimension: DN15
/ connection thread: G ½
/ centre distance: 150 ± 12 mm
/ intrinsically safe against backflow
/ shower bar diameter: 25 mm
/ 2 functions

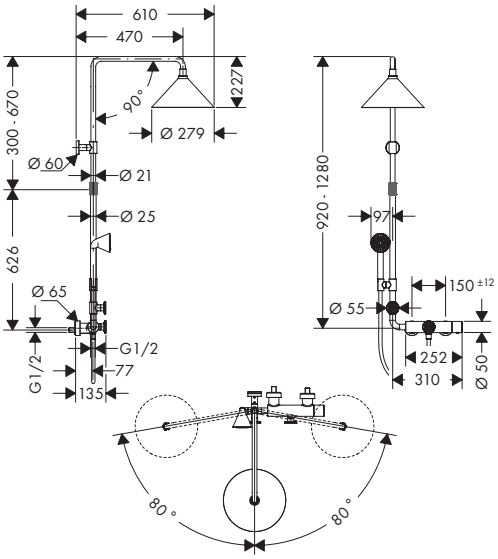

Technologies

Spray types

Shower head size	Spray types	Function from (l/min)	Max. flow rate at 3 bar (l/min)	Min. flow pressure (bar)	Finish	Code no.
240	Rain, RainAir	9.2	21	1	Chrome	26020000
					AXOR FinishPlus*	26020XXX

Measurements within scale drawings are in mm.
Technical specifications and units of measure are subject to change.

AXOR Montreux Showerpipe with thermostat and overhead shower 240 1jet

Features of all variants

/ consists of: overhead shower, hand shower, shower thermostat, shower hose, slider, shower bar
/ shower head size overhead shower: 240 mm
/ spray type overhead shower: RainAir
/ flow rate RainAir spray at 3 bar: 14 l/min
/ spray type hand shower: RainAir
/ flow rate of hand shower at 3 bar: 13,3 l/min
/ maximum flow rate for Showerpipe at 3 bar: 22,4 l/min
/ minimum flow pressure: 1 bar
/ max. operating pressure: 10 bar
/ height-adjustable slider
/ shower arm length overhead shower: 450 mm
/ swivelling shower arm
/ thermostat AXOR Montreux
/ SafetyStop at 40°C
/ adjustable hot water limitation
/ outlets controlled via turning handle
/ mounting type: exposed installation
/ connection dimension: DN15
/ connection thread: G ½
/ centre distance: 170 ± 32 mm
/ intrinsically safe against backflow
/ shower bar diameter: 22 mm
/ 2 functions

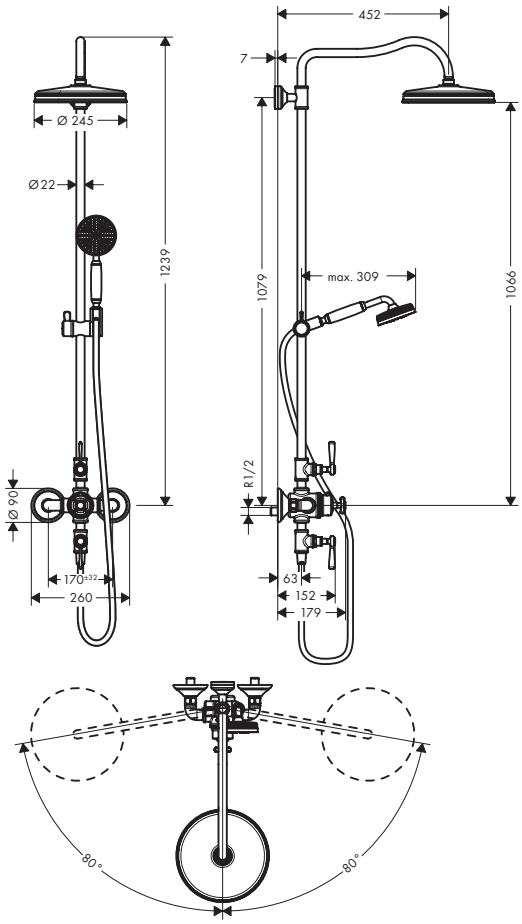

Technologies

AirPower
Quick Clean

Spray types

RainAir

Certificates/declarations

EPD

Shower head size	Spray types	Function from (l/min)	Max. flow rate at 3 bar (l/min)	Min. flow pressure (bar)	Thermostat	Finish	Code no.
240	RainAir	8.5	22.4	1	AXOR Montreux	Chrome	16572000
						Brushed Black Chrome	16572340
						Brushed Nickel	16572820
						AXOR FinishPlus*	16572XXX

*AXOR FinishPlus: For further AXOR FinishPlus surfaces please see the AXOR FinishPlus overview on page 44.

AXOR

AXOR ShowerSelect ID

Thermostatic module Select

ShowerCollection

AXOR One

AXOR SHOWER CONTROLS

Innovative technology for the shower and bath

AXOR Shower controls

Perfectly calibrating hot and cold water, AXOR thermostatic mixers ensure ideal water temperature and volume in the bath and shower. Exposed, they offer elegant design and ease of installation. Concealed, they merge seamlessly with any bathroom décor. Both offer ecologically-conscious water consumption and luxurious customization options. Many AXOR thermostats enable the control of multiple spray outlets, providing an ideally personalized shower experience.

Design: Philippe Starck, PHOENIX, Antonio Citterio, Barber Osgerby

Characteristic design feature:

Available in an array of forms, styles and finishes offering an elegant, space-saving solution.

The designer's idea:

Intuitive controls offer ideal efficiency and comfort while enabling outlet selection, water volume control and temperature calibration.

Special program highlights:

/ AXOR ShowerSelect ID and thermostatic modules Select: Intuitive to use thanks to Select technology

/ AXOR One thermostatic modules Select: Innovative control and easy to use thanks to Select technology

/ AXOR ShowerCollection: A modular system consisting of thermostatic mixers, valves and shelves

→ Learn more about AXOR Shower Controls: axor-design.com

AXOR ShowerSelect ID

Precision meets Personality

AXOR ShowerSelect ID brings unprecedented precision and personalization to the shower experience. Developed in collaboration with PHOENIX, the concealed thermostatic mixer extends just 45 mm from the wall, a feat made possible by the new AXOR iBox universal 2. Within these sleek confines, a central temperature control dial offers satisfying haptic and auditory feedback while surrounding paddles utilize the latest Select technology, allowing for quick, easy switching among spray types and outlets. With three design styles to choose from-round, square or softsquare – as well as a wide range of AXOR FinishPlus surfaces and AXOR Signature custom inlay options, AXOR ShowerSelect ID is more than a marvel of technology and design. As its name suggests, it's a unique opportunity to express one's individual identity, taste and style.

Design: PHOENIX

Select paddles which extend just 13 mm from the wall

Surrounding chamfer for a centered look

Linear structure

Safety stop at 40°C

Matt Black control elements

AXOR ShowerSelect ID is characterized by ultra-precise control, universal design styles and unique customization options. Users can combine AXOR ShowerSelect ID thermostats to cover up to four outlets in order to accommodate almost any shower configuration, from a small 1 outlet shower up to a 4 function wellness shower.

Lasered user symbols

Temperature indication pin

Monolithic thermostat handle with metal inlay or material inlay via AXOR Signature*

Volume control with stop function

*Same finish inlay for AXOR FinishPlus surfaces, Matt Black inlay for Chrome surface

AXOR Signature

Bi-Color Finishes

AXOR Signature is an exclusive service that takes a design object and makes it one-of-a-kind, whether by providing each mixer with the customer's personal touch or by modifying it to fit specific dimensions. The personal and customized result manufactured by AXOR experts in Schiltach. With the utmost in care and precise craftsmanship in accordance with industrial standards.

For those wishing to accentuate the minimalist shape and bold simplicity of AXOR ShowerSelect ID, AXOR Signature introduces custom bi-color finishes. With 10 distinct PVD finishes to choose from, the combination options—from subtle tonal shifts to bold and colorful contrasts—are seemingly endless.

To request the customized bi-color product via AXOR Signature, the order consists of a detailed description of each product part and the desired finish.

Upper Select Paddle
e.g. Brushed Black Chrome
-340

Inlay
e.g. Brushed Black Chrome
-340

Rim
e.g. Brushed Bronze
-140

Lower Select Paddle
e.g. Brushed Black Chrome
-340

Material inlays

Beyond functionality and design, AXOR ShowerSelect ID also sets new standards in individualization. With its unique system of custom inlay options for the product's monolithic central dial, AXOR ShowerSelect ID presents the perfect canvas to express your personality. This includes black Nero Marquina marble, Marble Lasa Covelano Vena Oro, black walnut, mirrored glass and black glass.

Customize easily with the S-Tag

To request the customized product via AXOR Signature, the order number is composed of the model number, the finish and the individualization code, the S-Tag.

1. MODEL NUMBER: SELECT YOUR AXOR SHOWERSELECT ID BASE MODEL

Thermostat for concealed installation
square for 2 functions
e.g. # 36752XXX

Thermostat for concealed installation
softsquare for 2 functions
e.g. # 36754XXX

Thermostat for concealed installation
round for 2 functions
e.g. # 36750XXX

2. FINISH: SELECT YOUR AXOR FINISHPLUS SURFACE

Chrome
-000

Matt Black
-670

Matt White
-700
(only round)

Brushed Black
Chrome
-340

Polished Gold Optic
-990

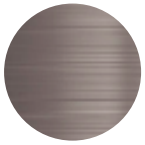

Brushed Nickel
-820

Brushed Bronze
-140

Brushed Brass
-950

Brushed Gold Optic
-250

Polished Red Gold
-300

Brushed Red Gold
-310

Stainless Steel Optic
-800

Polished Black Chrome
-330

3. S-TAG: SELECT YOUR MATERIAL INLAY

Mirror Glass
-MIG

Black Glass
-BLG

Black Walnut
-BLW

Marble Lasa
Covelano Vena Oro
-MLC

Marble Nero Marquina
-MNM

4. FINAL ORDERING NUMBER

36754-XXX

+

Brushed Black Chrome
-340

+

Black Walnut
-BLW

=

36754340-BLW

→ Learn more about AXOR Signature: axor-design.com

AXOR Thermostatic modules with Select technology:

Intuitive control in the shower

Unmatched aesthetics. Impressive Functionality. AXOR thermostatic modules for concealed installation create unforgettable moments in the shower. For the ultimate ease of use: Select technology reduces operation to the touch of a button. With precise regulation for constant temperature control. With escutcheons made of high-grade metal and available in a variety of designs.

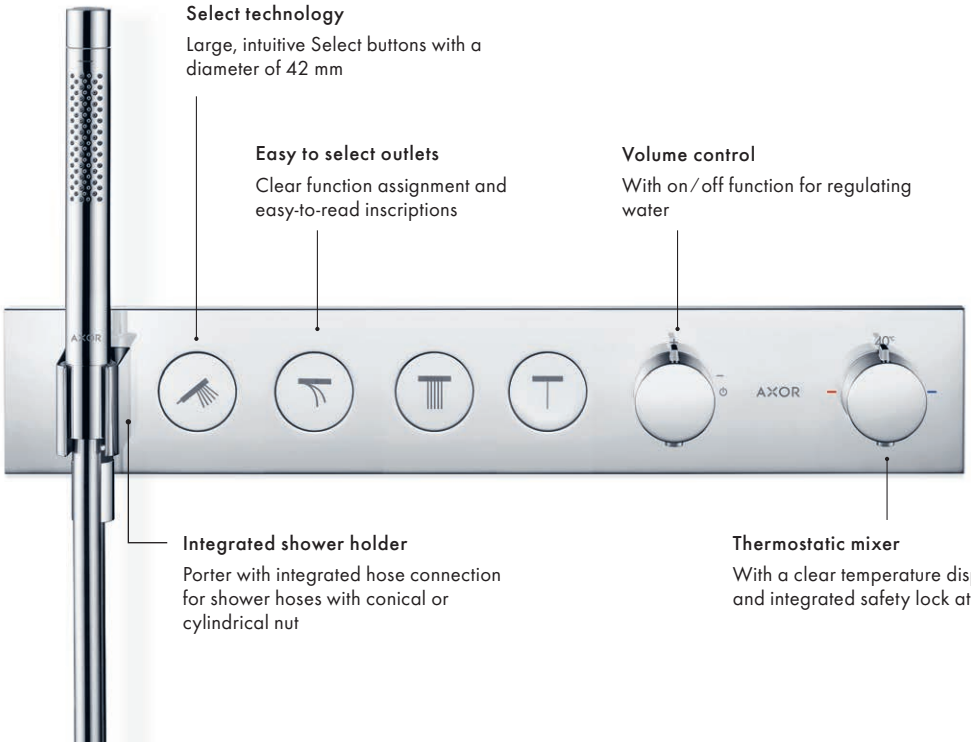

Select technology
Large, intuitive Select buttons with a diameter of 42 mm

Easy to select outlets
Clear function assignment and easy-to-read inscriptions

Volume control
With on/off function for regulating water

Integrated shower holder
Porter with integrated hose connection for shower hoses with conical or cylindrical nut

Thermostatic mixer
With a clear temperature display and integrated safety lock at 40°C

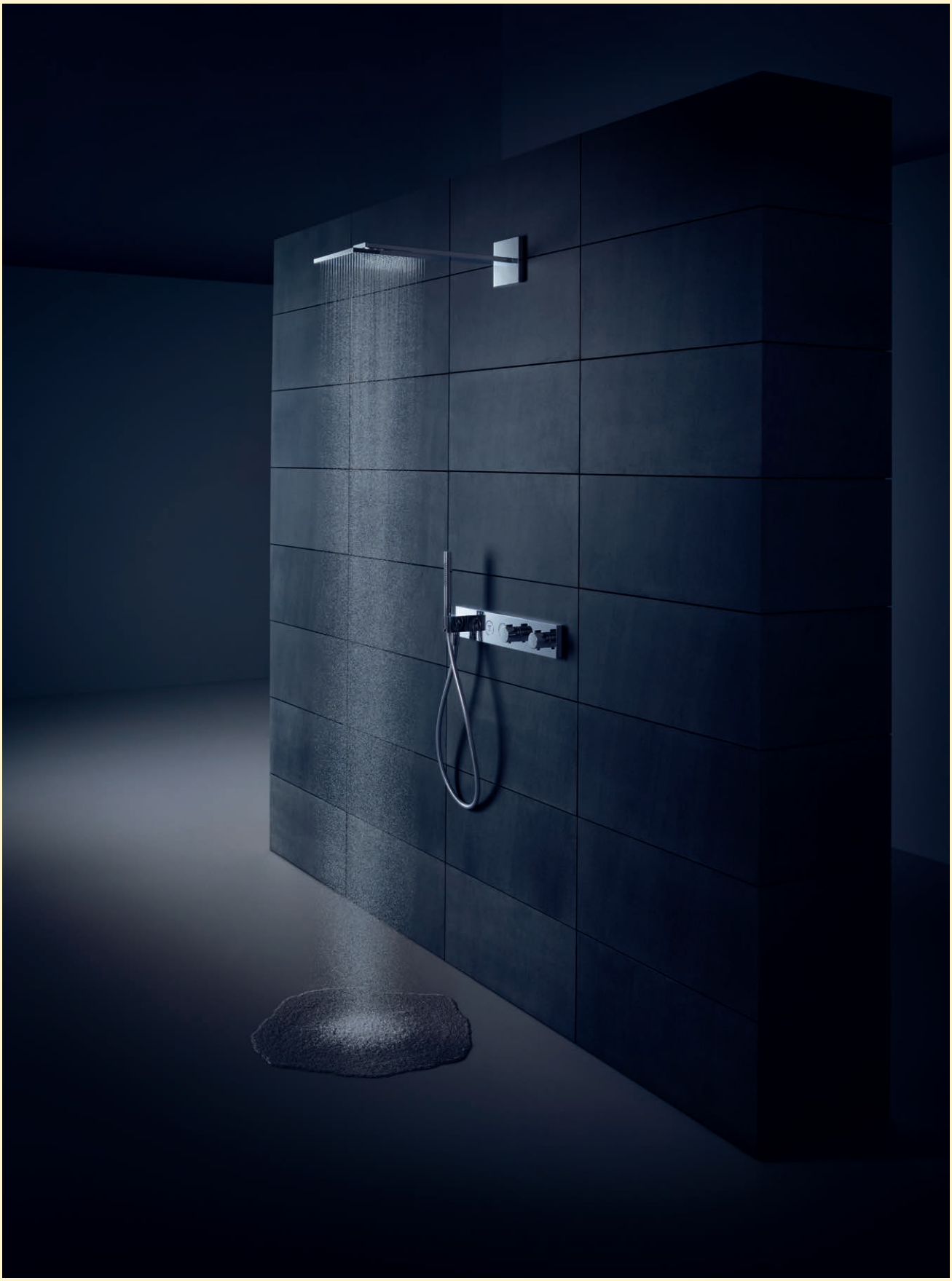

Striking design
Intuitive control

Flat. Soft. Planar. The monolithic control element and the hand shower of the AXOR One shower set.Interaction design par excellence. All thanks to the innovative ShowerSelect technology. With the control element, two large paddles manage the shower jets. Can be combined with one, two or three outlets. Concealed installation.

Temperature regulation

/ Precisely controllable with the large, cylindrical knob

/ Safety lock limits temperature to 40°C

/ Maximum temperature adjustable

Outlet control

/ Large Select paddles turn the water on and off easily

/ Complete control with finger, hand or even elbow operation

/ Up to three functions can be activated—separately or at the same time

/ A porter can be added

Volume control

/ For economical water consumption

/ Volume control reduces water flow continuously by up to 50%—depending on flow volume and installation situation

Operation

/ Large symbols on the paddles clearly indicate which outlet is being used

/ The paddle icons can be applied easily after installation

AXOR

AXOR ShowerSelect ID Thermostats for concealed installation for 1 function

Features of all variants

/ 1 function
/ comfortable turning on / off of outlets with large Select-paddle, precise temperature control thanks to vertical handle structure and haptic feedback from the thermostat handle
/ water flow control with stop function
/ maximum flow rate at 1 bar: 10,8 l/min
/ maximum flow rate at 3 bar: 20,3 l/min
/ min. operating pressure: 1 bar
/ max. operating pressure: 10 bar
/ flat escutcheon for more space in the shower
/ escutcheon can be aligned by +/- 3 °
/ easy installation due to pre-assembled function block
/ handles always at the same height regardless of the installation depth of the basic set
/ Safety stop at 40 °C
/ temperature limitation adjustable
/ the thermostat offers the possibility for thermal disinfection
/ material button: metal
/ material handles: metal
/ connection type: basic set iBox universal 2 (# 01400180)
/ Select-paddle is delivered with lasered On/Off symbol

round

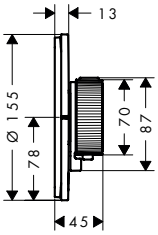

square

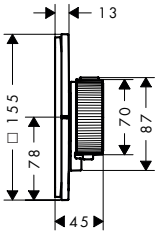

softsquare

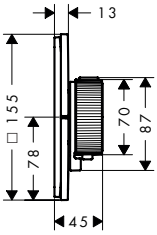

Special feature

Technologies

Overview variants

	Shape	Finish	Code no.
	round	Chrome	36756000
		Brushed Bronze	36756140
		Brushed Black Chrome	36756340
		Matt Black	36756670
		Matt White	36756700
		Brushed Nickel	36756820
		Polished Gold Optic	36756990
		AXOR FinishPlus*	36756XXX
	square	Chrome	36757000
		Brushed Bronze	36757140
		Brushed Black Chrome	36757340
		Matt Black	36757670
		Brushed Nickel	36757820
		Polished Gold Optic	36757990
		AXOR FinishPlus*	36757XXX
	softsquare	Chrome	36758000
		Brushed Bronze	36758140
		Brushed Black Chrome	36758340
		Matt Black	36758670
		Brushed Nickel	36758820
		Polished Gold Optic	36758990
		AXOR FinishPlus*	36758XXX

Required parts:		Code no.
	AXOR iBox universal 2 Basic set	01400180

Measurements within scale drawings are in mm.
Technical specifications and units of measure are subject to change.

AXOR ShowerSelect ID Thermostats for concealed installation for 2 functions

Features of all variants

/ 2 functions
/ simultaneous use of several outlets
/ comfortable turning on / off of outlets with large Select-paddle, precise temperature control thanks to vertical handle structure and haptic feedback from the thermostat handle
/ water flow control with stop function
/ thermostat cartridge, Start/stop valve to operate the functions
/ maximum flow rate at 1 bar: 12,7 l/min
/ flow rate upper outlet: 20 l/min
/ flow rate lower outlet: 20 l/min
/ maximum flow rate at 3 bar: 22,1 l/min
/ min. operating pressure: 1 bar
/ max. operating pressure: 10 bar
/ flat escutcheon for more space in the shower
/ escutcheon can be aligned by +/- 3 °
/ easy installation due to pre-assembled function block
/ handles always at the same height regardless of the installation depth of the basic set
/ Safety stop at 40 °C
/ temperature limitation adjustable
/ the thermostat offers the possibility for thermal disinfection
/ material button: metal
/ material handles: metal
/ connection type: basic set iBox universal 2 (# 01400180)
/ Select-paddles are delivered with lasered user symbols (Rain large and hand shower)

round

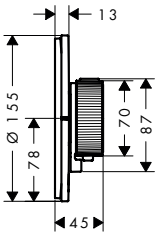

square

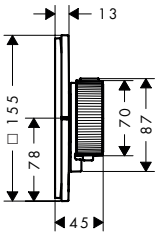

softsquare

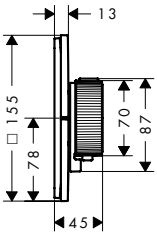

Special feature

Technologies

Overview variants

Shape	Finish	Code no.
round	Chrome	36750000
	Brushed Bronze	36750140
	Brushed Black Chrome	36750340
	Matt Black	36750670
	Matt White	36750700
	Brushed Nickel	36750820
	Polished Gold Optic	36750990
	AXOR FinishPlus*	36750XXX
square	Chrome	36752000
	Brushed Bronze	36752140
	Brushed Black Chrome	36752340
	Matt Black	36752670
	Brushed Nickel	36752820
	Polished Gold Optic	36752990
	AXOR FinishPlus*	36752XXX
softsquare	Chrome	36754000
	Brushed Bronze	36754140
	Brushed Black Chrome	36754340
	Matt Black	36754670
	Brushed Nickel	36754820
	Polished Gold Optic	36754990
	AXOR FinishPlus*	36754XXX

Required parts:	Code no.
AXOR iBox universal 2 Basic set	01400180

*AXOR FinishPlus: For further AXOR FinishPlus surfaces please see the AXOR FinishPlus overview on page 44.

AXOR ShowerSelect ID Thermostat for concealed installation for 2 functions with integrated security combination according to EN1717

Features of all variants

/ 2 functions
/ comfortable turning on / off of outlets with large Select-paddle, precise temperature control thanks to vertical handle structure and haptic feedback from the thermostat handle
/ water flow control with stop function
/ thermostat cartridge, Start/stop valve to operate the functions
/ min. operating pressure: 1 bar
/ max. operating pressure: 10 bar
/ flat escutcheon for more space in the shower
/ escutcheon can be aligned by +/- 3 °
/ easy installation due to pre-assembled function block
/ handles always at the same height regardless of the installation depth of the basic set
/ Safety stop at 40 °C
/ temperature limitation adjustable
/ the thermostat offers the possibility for thermal disinfection
/ with integrated safety combination EN 1717
/ material button: metal
/ material handles: metal
/ connection type: basic set iBox universal 2 (# 01400180)
/ Select-paddles are delivered with lasered user symbols (hand shower and bath tub)

round

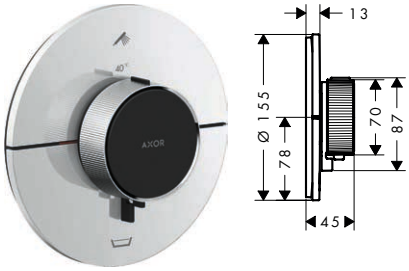

square

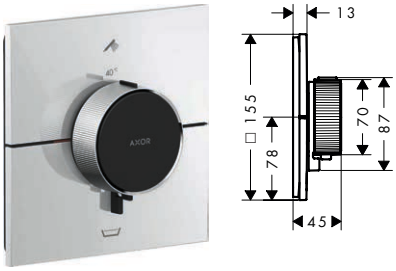

softsquare

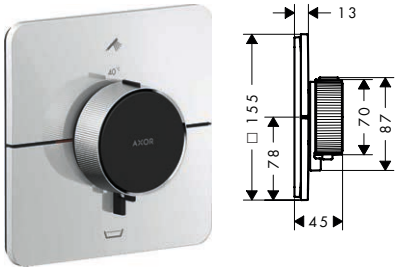

Special feature

Technologies

Overview variants

Shape	Finish	Code no.
round	Chrome	36751000
	Brushed Bronze	36751140
	Brushed Black Chrome	36751340
	Matt Black	36751670
	Matt White	36751700
	Brushed Nickel	36751820
	Polished Gold Optic	36751990
	AXOR FinishPlus*	36751XXX
square	Chrome	36753000
	Brushed Bronze	36753140
	Brushed Black Chrome	36753340
	Matt Black	36753670
	Brushed Nickel	36753820
	Polished Gold Optic	36753990
softsquare	Chrome	36755000
	Brushed Bronze	36755140
	Brushed Black Chrome	36755340
	Matt Black	36755670
	Brushed Nickel	36755820
	Polished Gold Optic	36755990
	AXOR FinishPlus*	36755XXX

Required parts:	Code no.
AXOR iBox universal 2 Basic set	01400180

Measurements within scale drawings are in mm.
Technical specifications and units of measure are subject to change.

AXOR ShowerSelect ID Thermostats HighFlow for concealed installation

Features of all variants

/ temperature and water flow control, precise temperature control thanks to vertical handle structure and haptic feedback from the thermostat handle
/ water flow control with stop function
/ flow rate by simultaneous use of all outlets: 34,8 l/min
/ min. operating pressure: 1 bar
/ max. operating pressure: 10 bar
/ flat escutcheon for more space in the shower
/ escutcheon can be aligned by +/- 3°
/ easy installation due to pre-assembled function block
/ handles always at the same height regardless of the installation depth of the basic set
/ material button: metal
/ material handles: metal

round

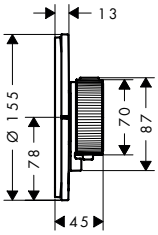

square

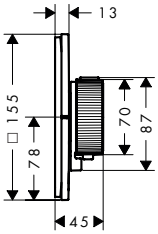

softsquare

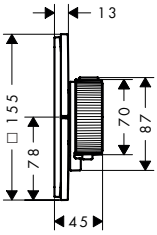

Special feature

Technologies

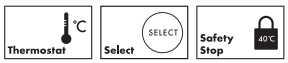

Overview variants

	Shape	Finish	Code no.
	round	Chrome	36759000
		Brushed Bronze	36759140
		Brushed Black Chrome	36759340
		Matt Black	36759670
		Matt White	36759700
		Brushed Nickel	36759820
		Polished Gold Optic	36759990
		AXOR FinishPlus*	36759XXX
	square	Chrome	36774000
		Brushed Bronze	36774140
		Brushed Black Chrome	36774340
		Matt Black	36774670
		Brushed Nickel	36774820
		Polished Gold Optic	36774990
	softsquare	Chrome	36775000
		Brushed Bronze	36775140
		Brushed Black Chrome	36775340
		Matt Black	36775670
		Brushed Nickel	36775820
		Polished Gold Optic	36775990
		AXOR FinishPlus*	36775XXX

Required parts:		Code no.
	AXOR iBox universal 2 Basic set	01400180

*AXOR FinishPlus: For further AXOR FinishPlus surfaces please see the AXOR FinishPlus overview on page 44.

AXOR ShowerSelect ID Thermostats HighFlow for concealed installation

Optional parts:		For	Finish	Code no.
	AXOR ShowerSelect ID Valve for concealed installation round for 3 functions	36759XXX	Chrome	36779000
			Brushed Bronze	36779140
			Brushed Black Chrome	36779340
			Matt Black	36779670
			Matt White	36779700
			Brushed Nickel	36779820
			Polished Gold Optic	36779990
			AXOR FinishPlus*	36779XXX
	AXOR ShowerSelect ID Valve for concealed installation square for 3 functions	36774XXX	Chrome	36780000
			Brushed Bronze	36780140
			Brushed Black Chrome	36780340
			Matt Black	36780670
			Brushed Nickel	36780820
			Polished Gold Optic	36780990
			AXOR FinishPlus*	36780XXX
	AXOR ShowerSelect ID Valve for concealed installation softsquare for 3 functions	36775XXX	Chrome	36781000
			Brushed Bronze	36781140
			Brushed Black Chrome	36781340
			Matt Black	36781670
			Brushed Nickel	36781820
			Polished Gold Optic	36781990
			AXOR FinishPlus*	36781XXX

Measurements within scale drawings are in mm.
Technical specifications and units of measure are subject to change.

AXOR ShowerSelect ID Thermostat HighFlow for concealed installation for 1 function and additional outlet

Features of all variants

/ 1 function and 1 additional outlet
/ Select push-button on/off control for 1 outlet, precise temperature control thanks to vertical handle structure and haptic feedback from the thermostat handle
/ water flow control with stop function
/ thermostat cartridge, Start/stop valve to operate the functions
/ maximum flow rate at 1 bar: 18,5 l/min
/ maximum flow rate at 3 bar: 32,8 l/min
/ flow rate upper outlet: 23 l/min
/ flow rate lower outlet: 23 l/min
/ min. operating pressure: 1 bar
/ max. operating pressure: 10 bar
/ flat escutcheon for more space in the shower
/ escutcheon can be aligned by +/- 3 °
/ easy installation due to pre-assembled function block
/ handles always at the same height regardless of the installation depth of the basic set
/ Safety stop at 40 °C
/ temperature limitation adjustable
/ the thermostat offers the possibility for thermal disinfection
/ material button: metal
/ material handles: metal
/ connection type: basic set iBox universal 2 (# 01400180)
/ thermostat is delivered with buttons hand shower, bath tub, whirl, body shower and On/Off

round

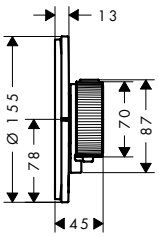

square

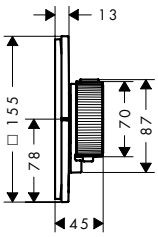

softsquare

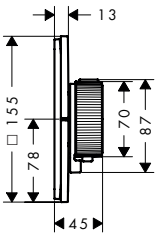

Special feature

Technologies

Overview variants

Shape	Finish	Code no.
round	Chrome	36776000
	Brushed Bronze	36776140
	Brushed Black Chrome	36776340
	Matt Black	36776670
	Matt White	36776700
	Brushed Nickel	36776820
	Polished Gold Optic	36776990
	AXOR FinishPlus*	36776XXX
square	Chrome	36777000
	Brushed Bronze	36777140
	Brushed Black Chrome	36777340
	Matt Black	36777670
	Brushed Nickel	36777820
	Polished Gold Optic	36777990
	AXOR FinishPlus*	36777XXX
softsquare	Chrome	36778000
	Brushed Bronze	36778140
	Brushed Black Chrome	36778340
	Matt Black	36778670
	Brushed Nickel	36778820
	Polished Gold Optic	36778990
	AXOR FinishPlus*	36778XXX

Required parts:	Code no.
AXOR iBox universal 2 Basic set	01400180

For more information about this product, please see the next page.

*AXOR FinishPlus: For further AXOR FinishPlus surfaces please see the AXOR FinishPlus overview on page 44.

AXOR ShowerSelect ID Thermostat HighFlow for concealed installation for 1 function and additional outlet

Optional parts:		For	Finish	Code no.
	AXOR ShowerSelect ID Valve for concealed installation round for 3 functions	36776XXX	Chrome	36779000
			Brushed Bronze	36779140
			Brushed Black Chrome	36779340
			Matt Black	36779670
			Matt White	36779700
			Brushed Nickel	36779820
			Polished Gold Optic	36779990
			AXOR FinishPlus*	36779XXX
	AXOR ShowerSelect ID Valve for concealed installation square for 3 functions	36777XXX	Chrome	36780000
			Brushed Bronze	36780140
			Brushed Black Chrome	36780340
			Matt Black	36780670
			Brushed Nickel	36780820
			Polished Gold Optic	36780990
			AXOR FinishPlus*	36780XXX
	AXOR ShowerSelect ID Valve for concealed installation softsquare for 3 functions	36778XXX	Chrome	36781000
			Brushed Bronze	36781140
			Brushed Black Chrome	36781340
			Matt Black	36781670
			Brushed Nickel	36781820
			Polished Gold Optic	36781990
			AXOR FinishPlus*	36781XXX

AXOR ShowerSelect ID Valves for concealed installation

Features of all variants

/ 3 functions
/ simultaneous use of several outlets
/ comfortable turning on / off of outlets with large Select-paddle
/ Start/stop valve to operate the functions
/ flow rate upper outlet: 26 l/min
/ flow rate left and right: 26 l/min
/ maximum flow rate at 3 bar: 32 l/min
/ min. operating pressure: 1 bar
/ max. operating pressure: 10 bar
/ escutcheon can be aligned by +/- 3°
/ easy installation due to pre-assembled function block
/ flat escutcheon for more space in the shower
/ valve is delivered with buttons Rain small, Rain large, hand sower, Waterfall and MonoRain
/ material button: metal

round

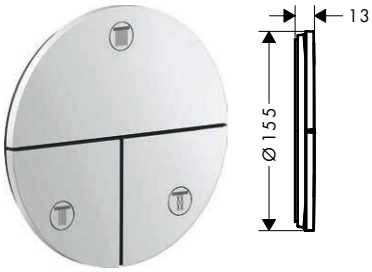

square

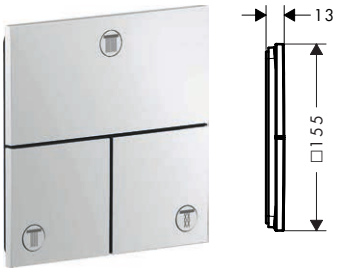

softsquare

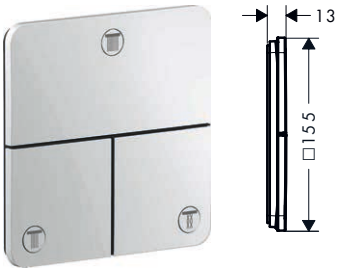

Measurements within scale drawings are in mm.
Technical specifications and units of measure are subject to change.

AXOR ShowerSelect ID Valves for concealed installation

Overview variants

Shape	Finish	Code no.
round	Chrome	36779000
	Brushed Bronze	36779140
	Brushed Black Chrome	36779340
	Matt Black	36779670
	Matt White	36779700
	Brushed Nickel	36779820
	Polished Gold Optic	36779990
	AXOR FinishPlus*	36779XXX
square	Chrome	36780000
	Brushed Bronze	36780140
	Brushed Black Chrome	36780340
	Matt Black	36780670
	Brushed Nickel	36780820
	Polished Gold Optic	36780990
	AXOR FinishPlus*	36780XXX
softsquare	Chrome	36781000
	Brushed Bronze	36781140
	Brushed Black Chrome	36781340
	Matt Black	36781670
	Brushed Nickel	36781820
	Polished Gold Optic	36781990
	AXOR FinishPlus*	36781XXX

Required parts:		Code no.
	AXOR iBox universal 2 Basic set	01400180

Optional parts:		For	Finish	Code no.
	AXOR ShowerSelect ID Thermostat HighFlow for concealed installation round for 1 function and additional outlet	36779XXX	Chrome	36776000
			Brushed Bronze	36776140
			Brushed Black Chrome	36776340
			Matt Black	36776670
			Matt White	36776700
			Brushed Nickel	36776820
			Polished Gold Optic	36776990
			AXOR FinishPlus*	36776XXX
	AXOR ShowerSelect ID Thermostat HighFlow for concealed installation round	36779XXX	Chrome	36759000
			Brushed Bronze	36759140
			Brushed Black Chrome	36759340
			Matt Black	36759670
			Matt White	36759700
			Brushed Nickel	36759820
			Polished Gold Optic	36759990
			AXOR FinishPlus*	36759XXX

For more information about this product, please see the next page.

*AXOR FinishPlus: For further AXOR FinishPlus surfaces please see the AXOR FinishPlus overview on page 44.

AXOR ShowerSelect ID Valves for concealed installation

Optional parts:		For	Finish	Code no.
	AXOR ShowerSelect ID Thermostat HighFlow for concealed installation square for 1 function and additional outlet	36780XXX	Chrome	36777000
			Brushed Bronze	36777140
			Brushed Black Chrome	36777340
			Matt Black	36777670
			Brushed Nickel	36777820
			Polished Gold Optic	36777990
			AXOR FinishPlus*	36777XXX
	AXOR ShowerSelect ID Thermostat HighFlow for concealed installation square	36780XXX	Chrome	36774000
			Brushed Bronze	36774140
			Brushed Black Chrome	36774340
			Matt Black	36774670
			Brushed Nickel	36774820
			Polished Gold Optic	36774990
	AXOR ShowerSelect ID Thermostat HighFlow for concealed installation SoftSquare for 1 function and additional outlet	36781XXX	Chrome	36778000
			Brushed Bronze	36778140
			Brushed Black Chrome	36778340
			Matt Black	36778670
			Brushed Nickel	36778820
			Polished Gold Optic	36778990
			AXOR FinishPlus*	36778XXX
	AXOR ShowerSelect ID Thermostat HighFlow for concealed installation softsquare	36781XXX	Chrome	36775000
			Brushed Bronze	36775140
			Brushed Black Chrome	36775340
			Matt Black	36775670
			Brushed Nickel	36775820
			Polished Gold Optic	36775990
			AXOR FinishPlus*	36775XXX

AXOR ShowerSolutions Thermostatic modules Select for concealed installation

Features of all variants

/ consists of: thermostatic module, shower holder
/ simultaneous use of several outlets
/ depending on volume flow and installation situation approx. 50% flow rate reduction and integrated shut off function
/ thermostat cartridge, Start/stop valve to operate the functions
/ maximum flow rate at 3 bar: 26 l/min
/ min. operating pressure: 1 bar
/ max. operating pressure: 10 bar
/ Safety stop at 40 °C
/ temperature limitation adjustable
/ for shower hoses with a conical nut
/ connection type: basic set

2 functions

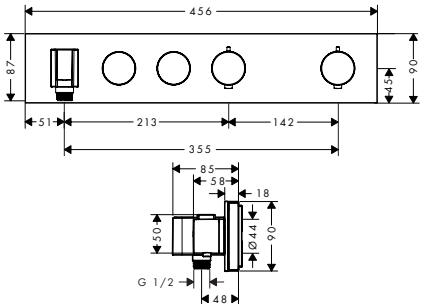

3 functions

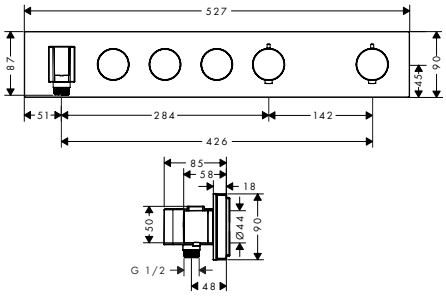

Special feature

Water Flow Control

Technologies

Thermostat | Select | Safety Stop 40°C

Certificates/declarations

EPD

Measurements within scale drawings are in mm.
Technical specifications and units of measure are subject to change.

AXOR ShowerSolutions Thermostatic modules Select for concealed installation

Overview variants

Number of functions	Max. flow rate at 3 bar (l/min)	Buttons included	Finish	Code no.
2 functions	26	Rain large, hand shower	Chrome	18355000
			Brushed Bronze	18355140
			Brushed Black Chrome	18355340
			Brushed Nickel	18355820
			Polished Gold Optic	18355990
			AXOR FinishPlus*	18355XXX
3 functions	26	Rain large, Waterfall, hand shower	Chrome	18356000
			Brushed Bronze	18356140
			Brushed Black Chrome	18356340
			Brushed Nickel	18356820
			Polished Gold Optic	18356990
			AXOR FinishPlus*	18356XXX

Required parts:	For	Code no.
Basic set for thermostatic module Select for 2 functions	18355XXX	18310180
Basic set for thermostatic module Select for 3 functions	18356XXX	18311180

AXOR ShowerSolutions Thermostatic modules Select for concealed installation

Features of all variants

/ consists of: thermostatic module, shower holder
/ simultaneous use of several outlets
/ depending on volume flow and installation situation approx. 50% flow rate reduction and integrated shut off function
/ thermostat cartridge, Start/stop valve to operate the functions
/ flow rate per outlet: 26 l/min
/ flow rate by simultaneous use of all outlets: 38 l/min
/ maximum flow rate at 3 bar: 38 l/min
/ min. operating pressure: 1 bar
/ max. operating pressure: 10 bar
/ Safety stop at 40 °C
/ temperature limitation adjustable
/ for shower hoses with a conical nut
/ connection type: basic set

4 functions

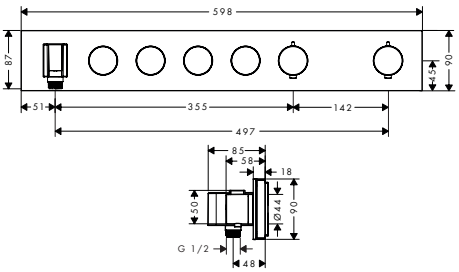

5 functions

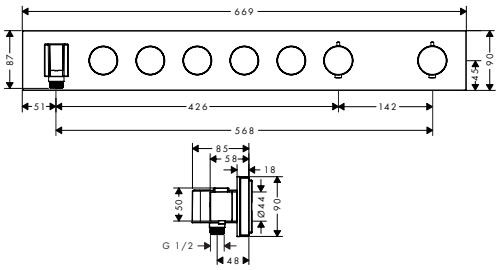

Special feature

Water Flow Control

Technologies

Thermostat | Select | Safety Stop

Certificates/declarations

EPD

Overview variants

Number of functions	Max. flow rate at 3 bar (l/min)	Flow rate per user	Buttons included	Finish	Code no.
4 functions	38	26	Rain large, Waterfall, Mono, hand shower	Chrome	18357000
				Brushed Bronze	18357140
				Brushed Black Chrome	18357340
				Brushed Nickel	18357820
				Polished Gold Optic	18357990
				AXOR FinishPlus*	18357XXX

For more information about this product, please see the next page.

*AXOR FinishPlus: For further AXOR FinishPlus surfaces please see the AXOR FinishPlus overview on page 44.

AXOR ShowerSolutions Thermostatic modules Select for concealed installation

Overview variants

Number of functions	Max. flow rate at 3 bar (l/min)	Flow rate per user	Buttons included	Finish	Code no.
5 functions	38	26	PowderRain inside, PowderRain outside, Mono, overhead shower, hand shower	Chrome	18358000
				AXOR FinishPlus*	18358XXX

Required parts:	For	Code no.
Basic set for thermostatic module Select for 4 functions	18357XXX	18312180
Basic set for thermostatic module Select for 5 functions	18358XXX	18313180

Symbol handshower thermostatic module Select

Finish	Code no.
Chrome	93307000
AXOR FinishPlus*	93307XXX

Symbol overhead shower thermostatic module Select

Finish	Code no.
Chrome	93308000
AXOR FinishPlus*	93308XXX

Symbol overhead shower Rain small thernistatic module Select

Finish	Code no.
Chrome	93663000
AXOR FinishPlus*	93663XXX

Symbol Mono thermostatic module Select

Finish	Code no.
Chrome	93310000
AXOR FinishPlus*	93310XXX

Symbol PowderRain inside thermostatic module Select

Finish	Code no.
Chrome	93311000
AXOR FinishPlus*	93311XXX

Symbol PowderRain outside thermostatic module Select

Finish	Code no.
Chrome	93312000
AXOR FinishPlus*	93312XXX

Measurements within scale drawings are in mm.
Technical specifications and units of measure are subject to change.

AXOR ShowerSolutions Thermostatic module 120/120 for concealed installation square

Features

/ 1 function
/ thermostat cartridge
/ maximum flow rate at 3 bar: 59 l/min
/ min. operating pressure: 1,5 bar
/ max. operating pressure: 10 bar
/ Safety stop at 40 °C
/ temperature limitation adjustable
/ non-return valve
/ connection dimension: DN20
/ connection type: basic set

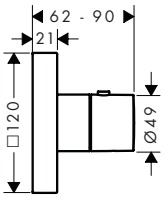

Technologies

Finish	Code no.
Chrome	10755000
AXOR FinishPlus*	10755XXX

Required parts:		Code no.
	AXOR ShowerSolutions Basic set for thermostatic module 120/120 for concealed installation	10754180

Optional parts:		Finish	Code no.
	AXOR ShowerSolutions Extension set 25 mm for thermostatic module	Chrome	10790000
		AXOR FinishPlus*	10790XXX

AXOR ShowerSolutions Thermostatic module 360/120 for concealed installation square for 3 functions

Features

/ 3 functions
/ simultaneous use of several outlets
/ thermostat cartridge
/ min. operating pressure: 1,5 bar
/ max. operating pressure: 10 bar
/ Safety stop at 40 °C
/ temperature limitation adjustable
/ non-return valve
/ connection dimension: DN20
/ connection type: basic set

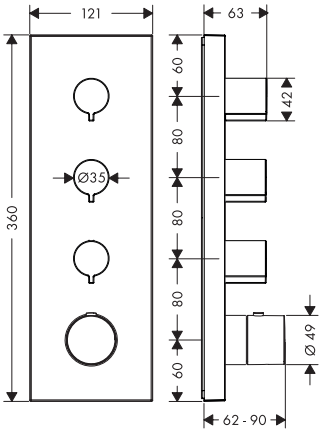

Special feature

Technologies

Certificates/declarations

Finish	Code no.
Chrome	10751000
AXOR FinishPlus*	10751XXX

Required parts:		Code no.
	AXOR ShowerSolutions Basic set for thermostatic module 360/120 for concealed installation	10750180

Optional parts:		Finish	Code no.
	AXOR ShowerSolutions Extension set 25 mm for thermostatic module	Chrome	10790000
		AXOR FinishPlus*	10790XXX
	Extension set 25 mm for shut-off/ diverter valve Trio-/ Quattro		92990000

*AXOR FinishPlus: For further AXOR FinishPlus surfaces please see the AXOR FinishPlus overview on page 44.

AXOR ShowerSolutions Shut-off valve 120/120 for concealed installation square

Features of all variants

/ connection type: DN15/DN20

/ in a joined installation (10 mm distance) with no.10755000, no.10751000, no.10651000, no.28491000, no.40872000 or no.40873000 the use of basic set no.10971180 is recommended

/ in a freely arranged installation, basic sets no.16973180, no.16974180 or no.16970180 can also be used

/ noise class: II

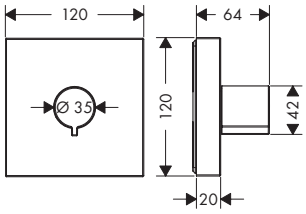

Product dimensions (mm)	Finish	Code no.
120/120	Chrome	10972000
	AXOR FinishPlus*	10972XXX

Required parts (choose one):		Code no.
	Basic set 52 l/min for shut-off valve for concealed installation spindle	16973180
	AXOR ShowerSolutions Basic set for shut-off valve 120/120 for concealed installation	10971180
	Basic set 40 l/min for shut-off valve for concealed installation ceramic	16974180
	Basic set 130 l/min for shut-off valve for concealed installation spindle	16970180

Optional parts:		Code no.
	Extension set 25 mm for shut-off/ diverter valve Trio-/ Quattro	92990000

AXOR ShowerSolutions Shut-off/ diverter valve Trio/ Quattro 120/120 for concealed installation

Features

/ 3 consumers: in a freely-arranged installation (distance greater than 10 mm), the basic set no.16930180 must be used

/ 2 consumers: in a joined installation (10 mm distance) with no.36702000, the basic set no.36770180 must be used

/ 2 consumers: in a freely-arranged installation (distance greater than 10 mm), the basic set no.16982180 must be used

/ simultaneous utilization of 2 functions

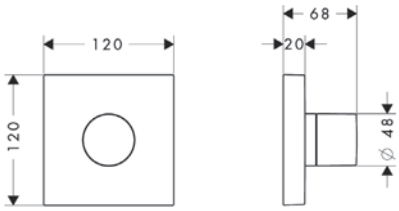

Finish	Code no.
Chrome	10932000
AXOR FinishPlus*	10932XXX

Required parts (choose one):		Code no.
	Basic set for Quattro four-way diverter valve for concealed installation	16930180
	Basic set for shut-off/ diverter valve Trio for concealed installation	16982180
	AXOR Citterio E Basic set for shut-off/ diverter valve Trio 120/120 for concealed installation	36770180

Measurements within scale drawings are in mm.
Technical specifications and units of measure are subject to change.

AXOR ShowerSolutions Hand shower module 120/120 for concealed installation square

Features of all variants

/ consists of: shut-off valve, hand shower module, baton hand shower, shower hose
/ hose nut: for shower hoses with a cylindrical nut
/ connection type: DN15
/ with non-return valve
/ maximum flow rate at 3 bar: 14,5 l/min
/ material: metal
/ flow rate of hand shower at 3 bar: 14,5 l/min
/ noise class: I

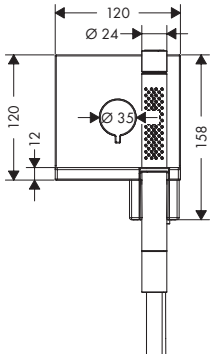

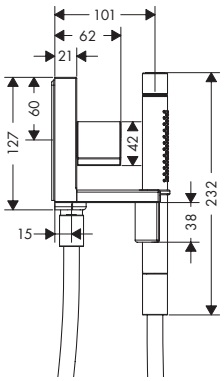

Max. flow rate at 3 bar (l/min)	Finish	Code no.
14.5	Chrome	10651000
	AXOR FinishPlus*	10651XXX

Required parts:		Code no.
	AXOR ShowerSolutions Basic set for hand shower module 120/120 for concealed installation	10650180

Optional parts:		Code no.
	AXOR Starck Extension set for hand shower module	10658000

AXOR ShowerSolutions Shelves

Features of all variants

/ for use with either vertical or horizontal installation of the basic set
/ material frame: metal
/ material shelf: metal
/ with mounting material
/ concealed fastening
/ drilling distance: 72 mm
/ diameter drill hole: 6 mm

240/120

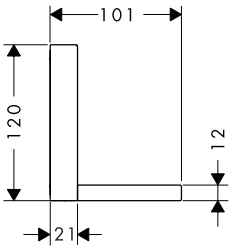

120/120

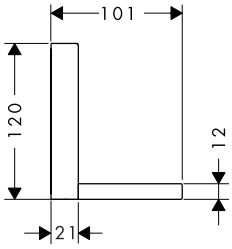

Overview variants

	Product dimensions (mm)	Finish	Code no.
	240/120	Chrome	40873000
		AXOR FinishPlus*	40873XXX
	120/120	Chrome	40872000
		AXOR FinishPlus*	40872XXX

Optional parts:		For	Code no.
	AXOR ShowerSolutions Basic set/ waterconducting unit for shelf 240/120 for concealed installation	40873XXX	40878180
	AXOR ShowerSolutions Basic set/ waterconducting unit for shelf 120/120 for concealed installation	40872XXX	40877180

*AXOR FinishPlus: For further AXOR FinishPlus surfaces please see the AXOR FinishPlus overview on page 44.

AXOR One Thermostatic modules for concealed installation

Features of all variants

/ comfortable turning on / off of outlets with large Select-paddle
/ Eco-Function: flow rate regulation via lever handle, depending on volume flow and installation situation approx. 50% flow rate reduction
/ thermostat cartridge, Start/stop valve to operate the functions
/ flow rate per outlet: 24 l/min
/ min. operating pressure: 1 bar
/ max. operating pressure: 5 bar
/ Safety stop at 40 °C
/ temperature limitation adjustable
/ the thermostat offers the possibility for thermal disinfection
/ non-return valve
/ connection type: basic set

1 function

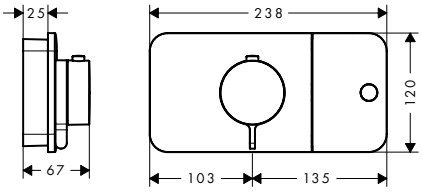

2 functions

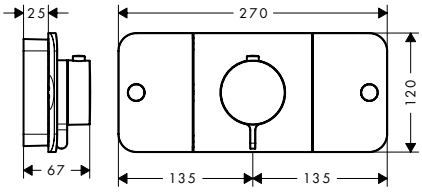

3 functions

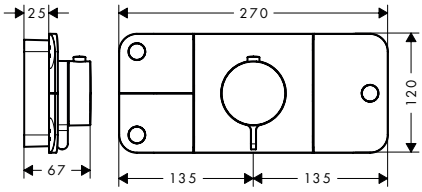

Special feature

Technologies

Certificates/declarations

Overview variants

Number of functions	Max. flow rate at 3 bar (l/min)	Flow rate per user	Finish	Code no.
1 function	24	24	Chrome	45711000
			Brushed Bronze	45711140
			Brushed Black Chrome	45711340
			Matt Black	45711670
			Matt White	45711700
			Brushed Brass	45711950
			Polished Gold Optic	45711990
			AXOR FinishPlus*	45711XXX

Measurements within scale drawings are in mm.
Technical specifications and units of measure are subject to change.

AXOR One Thermostatic modules for concealed installation

Overview variants

Number of functions	Max. flow rate at 3 bar (l/min)	Flow rate per user	Finish	Code no.
2 functions	30	24	Chrome	45712000
			Brushed Bronze	45712140
			Brushed Black Chrome	45712340
			Matt Black	45712670
			Matt White	45712700
			Brushed Brass	45712950
			Polished Gold Optic	45712990
			AXOR FinishPlus*	45712XXX
3 functions	30	24	Chrome	45713000
			Brushed Bronze	45713140
			Brushed Black Chrome	45713340
			Matt Black	45713670
			Matt White	45713700
			Brushed Brass	45713950
			Polished Gold Optic	45713990
			AXOR FinishPlus*	45713XXX

Required parts:		Code no.
	AXOR One Basic set for thermostatic module for concealed installation	45710180

Optional parts:		Finish	Code no.
	AXOR One Extension set 25 mm for basic set thermostatic module		45790000
		AXOR FinishPlus*	45790XXX

*AXOR FinishPlus: For further AXOR FinishPlus surfaces please see the AXOR FinishPlus overview on page 44.

AXOR One Wall outlet stop with shut-off valve

Features

/ connection type: DN15
/ hose connection DN15
/ with non-return valve
/ maximum flow rate at 3 bar: 21,8 l/min

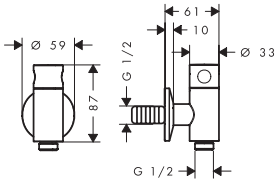

Finish	Code no.
Chrome	48781000
Brushed Bronze	48781140
Brushed Black Chrome	48781340
Brushed Brass	48781950
Polished Gold Optic	48781990
AXOR FinishPlus*	48781XXX

Measurements within scale drawings are in mm.
Technical specifications and units of measure are subject to change.

AXOR One Shut-off valve for concealed installation

Features of all variants

/ comfortable turning on / off of outlets with large Select-paddle
/ connection type: basic set
/ 1 function
/ connection dimension: DN15
/ material: metal

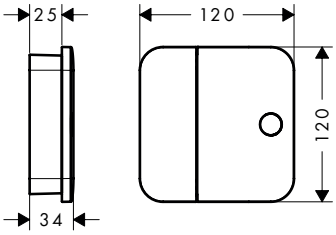

Technologies

Select

	Product dimensions (mm)	Finish	Code no.
	120/120	Chrome	45771000
		Brushed Bronze	45771140
		Brushed Black Chrome	45771340
		Matt Black	45771670
		Matt White	45771700
		Brushed Brass	45771950
		Polished Gold Optic	45771990
		AXOR FinishPlus*	45771XXX

Required parts:		Code no.
	AXOR One Basic set for shut-off valve for concealed installation	45770180

*AXOR FinishPlus: For further AXOR FinishPlus surfaces please see the AXOR FinishPlus overview on page 44.

AXOR

AXOR Universal Rectangular

AXOR Universal Circular

AXOR Universal Softsquare

AXOR Montreux

AXOR ShowerCollection

AXOR FlushPlate

AXOR ACCESSORIES

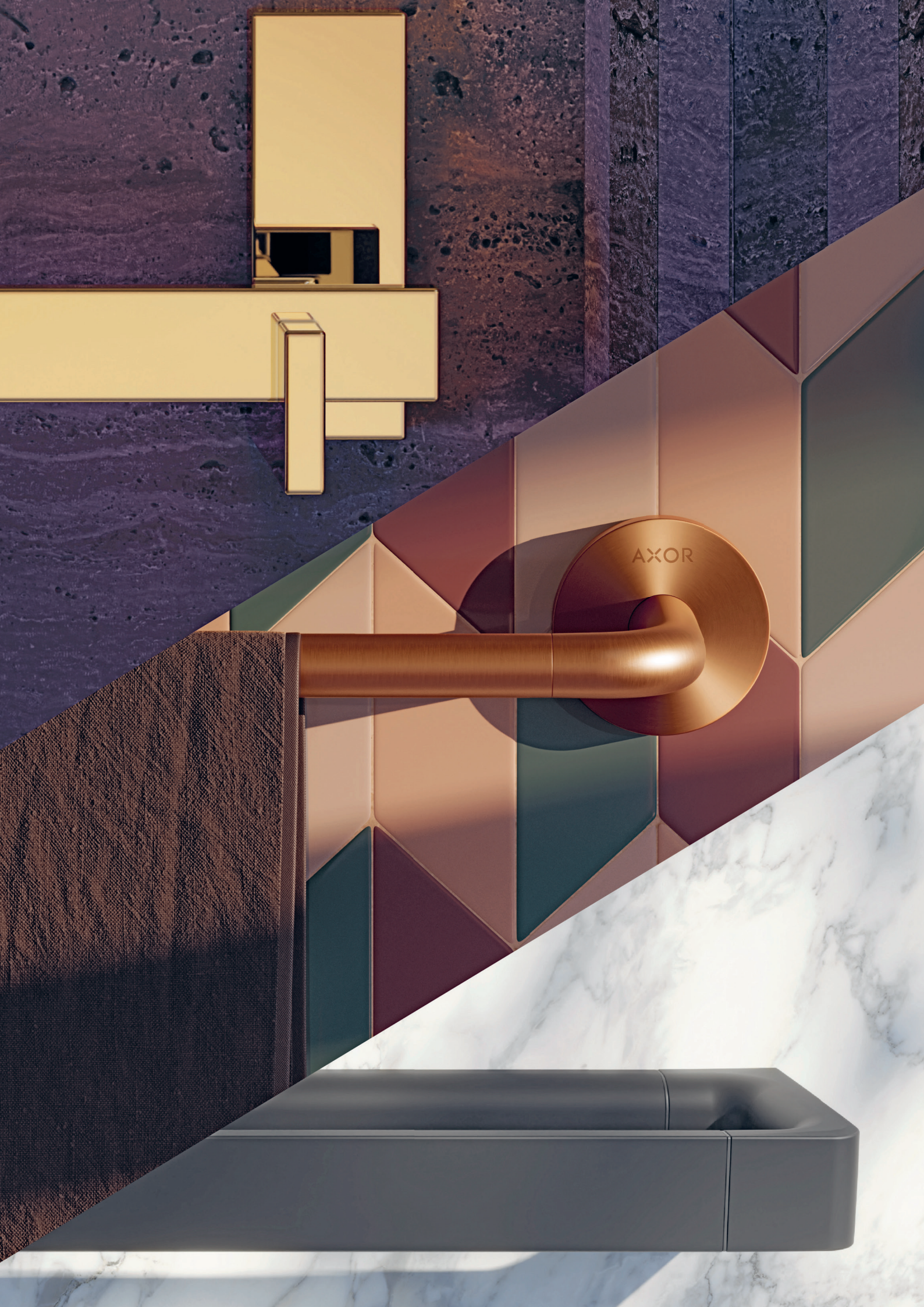
AXOR

Each individual AXOR Accessory is in itself a one-of-a-kind design object.

AXOR Accessories

Highest expression of individual style

Even the smallest details can say something about our personality. For individualists, accessories are no minor matter. They are that certain something. They are a statement with a message. AXOR accessories reflect the aspiration of individual design and holistic excellence that underlies the entire AXOR product range.

Design: Philippe Starck, Antonio Citterio, Barber Osgerby, PHOENIX

Characteristic design feature:

From minimalist to sculptural, from organic to classic, from extravagant to universal.

The designer's idea:

Perfect accessories: AXOR Accessories are coordinated with the various collections so that they complement and complete the bathroom atmosphere. Or bring the extra flair of a design object to the bathroom or kitchen. In contrast, AXOR Universal Accessories are linear and modular in design, so they fit to many different collections.

Special program highlights:

/ AXOR Universal Rectangular Accessories: ideal complement to AXOR collections with cubic or rectangular design language

/ AXOR Universal Circular accessories: Timeless, round design, versatile combinations

/ AXOR Universal Softsquare Accessories: Modular, versatile range in linear design

/ AXOR Montreux: Authentic-traditional design, for combination with classic faucets and shower products

/ AXOR FlushPlate: elegant design, sure to match any bathroom interior

→ Learn more about AXOR Accessories: axor-design.com

AXOR Universal Rectangular Accessories

The new AXOR Universal Rectangular Accessories, developed in collaboration with Philippe Starck, are the ideal complement to any AXOR collection with a cubic or rectangular design language. Their clear, no-frills design never takes center stage, but sets understated, high-quality accents in the bathroom. The broad product range includes a shaving mirror, a soap dispenser, toilet paper holders, and a variety of towel bars.

Design: Philippe Starck

Shaving mirror
Consistently rectangular design,
Swiveling

Single hook
Flat, precise design

Bath towel bar
Wall mounting perfectly reflects
the collection's design

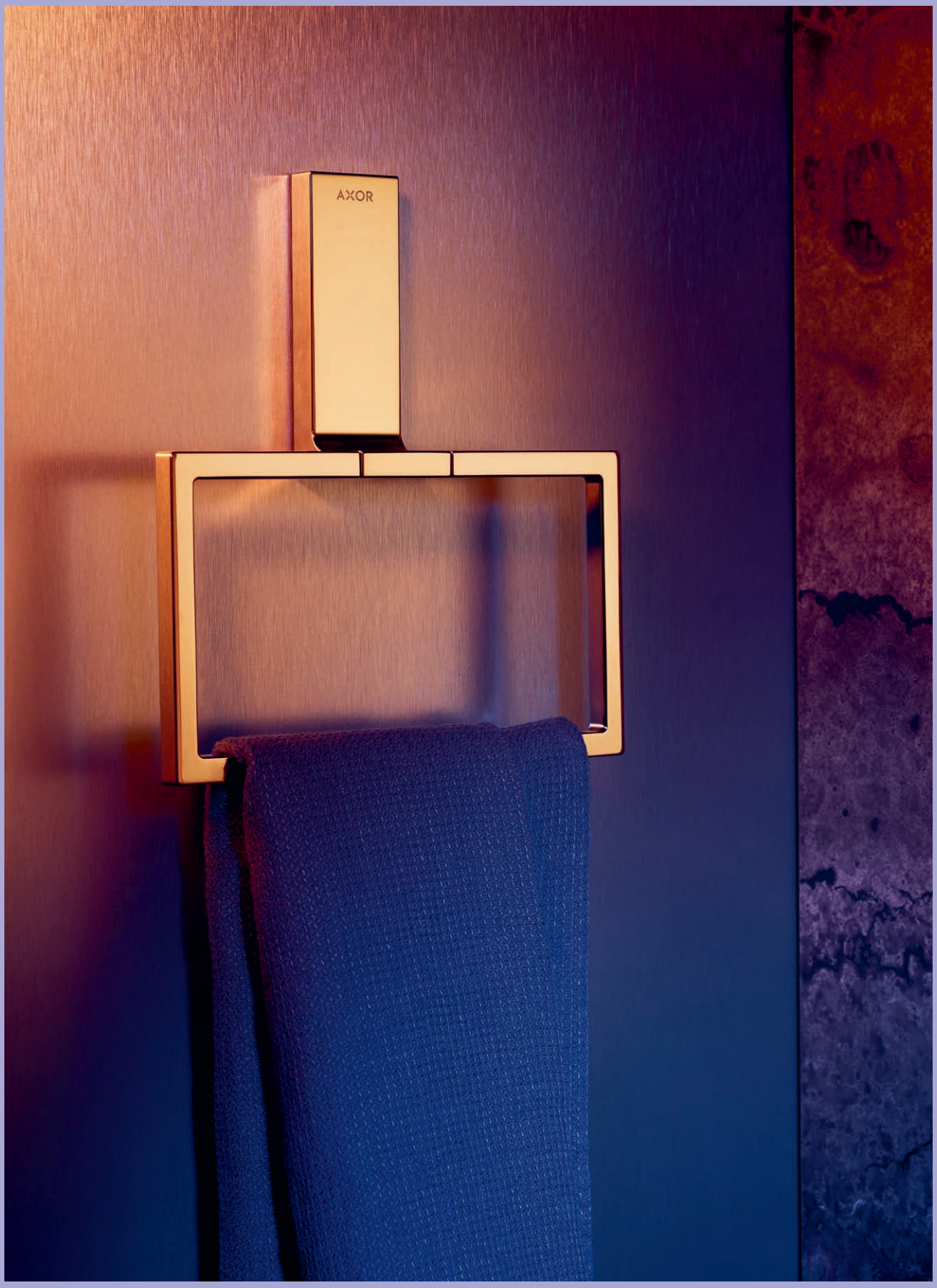
AXOR

AMOR

AXOR Universal Circular Accessories

With their minimalist, delicate, and timeless design combined with the utmost precision, AXOR Universal Circular accessories offer simplicity in form – for a harmonious overall impression in the bathroom. The products are characterized by a consistent, recognizable design language that runs through all areas of the bathroom—with slim silhouettes, rounded corners, and balanced proportions. Thanks to their timeless design, the products can be combined completely freely with different styles and fit perfectly with the AXOR portfolio collections. AXOR FinishPlus allows for customization with different PVD surfaces.

Design: Barber Osgerby

Double hook
/ Minimalistic design
/ Slim silhouettes

Wall mirror
/ Diameter: 600 mm

Lotion dispenser
/ Filling capacity: 300 ml
/ Dosage: 2 ml
/ Corrosion-resistant spout tube

AXOR Universal Softsquare Accessories

A new take on the special in everyday life: The AXOR Universal Softsquare accessories—including shelves, bath towel bars, soap dispensers, and even coat hooks are timelessly elegant extras that can be used individually or flexibly combined with each other. With their straightforward, generic design, they complete the overall aesthetic impression of an individual bathroom or kitchen design. Their elegantly rounded corners and universal design harmonize with several AXOR collections and very different style worlds.

Design: Antonio Citterio

Products required:
a. Rail
b. # 42838000 + 2 x # 42870000 Adapterset
c. # 42834000 + 1 x # 42870000 Adapterset

1

Liquid soap dispenser # 42819000

2

Asymmetrical positioning of shelf (300 mm) on the rail. Adapter set required.

Products required:

a. # 42838000
AXOR Universal Softsquare shelf 300 mm
+ 1 x # 42870000 Adapterset

b. Rail

3

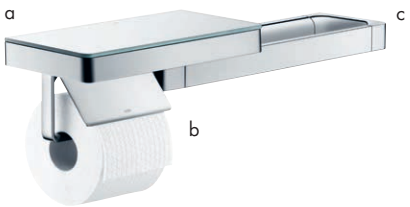

An elegant combination of a rail with shelf (300 mm, installed asymmetrically) and toilet paper holder. Two adapter sets required.

Products required:

a. # 42838000
AXOR Universal Softsquare shelf 300 mm
+ 1 x # 42870000 Adapterset

b. # 42836000
AXOR Universal Softsquare toilet paper holder
+ 1 x # 42870000 Adapterset

c. Rail

4

Large shelf surface: shelf (300 mm) and liquid soap dispenser on a rail. Three adapter sets required.

Products required:

a. # 42838000
AXOR Universal Softsquare shelf 300 mm
+ 2 x # 42870000 Adapterset

b. # 42819000
AXOR Universal Softsquare lotion dispenser
+ 1 x # 42870000 Adaptearset

c. Rail

5

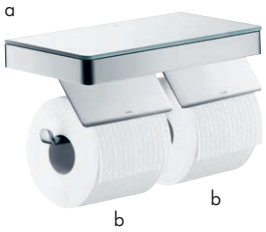

Triple duty: Shelf (300 mm) with two toilet paper holders. Two adapter sets required. One toilet paper holder is mounted in mirrored position.

Products required:

a. # 42838000
AXOR Universal Softsquare shelf 300 mm
+ 2 x # 42870000 Adapterset

b. 2 x # 42836000

6

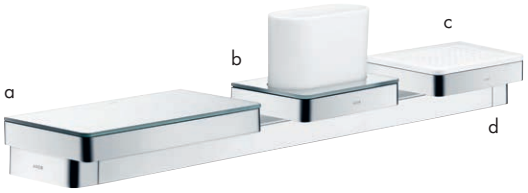

Everything is right where you need it: Multi-functional combination of a rail with shelf (300 mm), toothbrush holder and soap dish/shelf (150 mm). Four adapter sets required.

Products required:

a. # 42838000
AXOR Universal Softsquare shelf 300 mm
+ 2 x # 42870000 Adapterset

b. # 42836000
AXOR Universal Softsquare toilet paper holder
+ 1 x # 42870000 Adapterset

c. # 42803000 + 1 x # 42870000 Adapterset

d. Rail

7

Toilet paper holder with soap dish/shelf (150 mm)—a space-saving combination for the guest bathroom. One adapter set required.

Products required:

a. # 42803000
AXOR Universal Softsquare soap dish
+ 1 x # 42870000 Adapterset

b. # 42836000
AXOR Universal Softsquare toilet paper holder

AXOR Montreux
An array of accessories inspired by the early industrial age

AXOR Montreux brings Belle Époque elegance and charm to the bathroom. Complete the classic look with a wide range of accessories, from soap basket to towel rail, shaving mirror to toothbrush tumbler. Like the mixers and showers of the collection, each accessory is an authentic luxury design object, inspired by the bathroom fittings of the early industrial age and manufactured to the highest standards of quality.

AXOR FlushPlate

The perfect finishing touch

Functional, elegant and universal, the AXOR FlushPlate by Barber Osgerby completes the bathroom with quiet distinction. Through its refined parallel-push technology and robust construction, the design elevates operation to a haptic experience that is satisfying and effortless. An elegant solution sure to match any bathroom interior. Available in all AXOR FinishPlus surfaces, the AXOR FlushPlate makes a sophisticated statement while complementing the assortment of every AXOR collection.

Design: Barber Osgerby

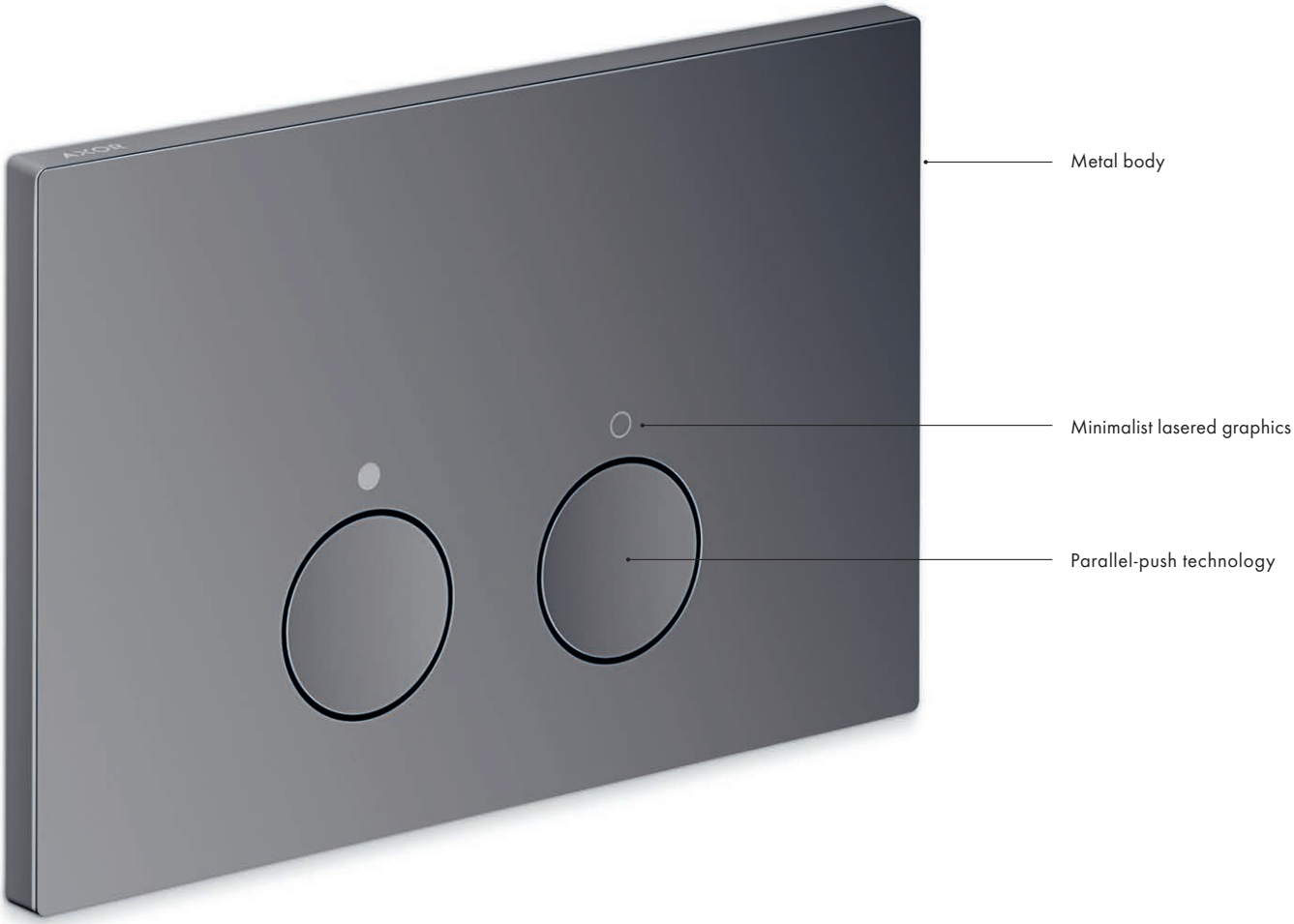

Complementary Products

AXOR UNIVERSAL SOFTSQUARE ACCESSORIES

AXOR UNIVERSAL RECTANGULAR ACCESSORIES

AXOR UNIVERSAL CIRCULAR ACCESSORIES

AXOR Universal Rectangular Toothbrush tumbler

Features

/ wall-mounted
/ material: metal, glass
/ holder material: metal
/ with mounting material
/ concealed fastening
/ drilling distance: 35 mm
/ diameter drill hole: 6 mm

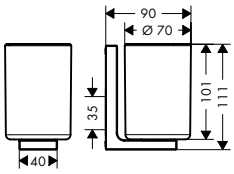

Finish	Code no.
Chrome	42604000
Brushed Bronze	42604140
Brushed Black Chrome	42604340
Matt Black	42604670
Brushed Nickel	42604820
Polished Gold Optic	42604990
AXOR FinishPlus*	42604XXX

AXOR Universal Rectangular Liquid soap dispenser

Features

/ wall-mounted
/ holder material: metal
/ material container: plastic
/ type of soap: liquid soap
/ filling capacity 600 ml
/ dosage 0.5 ml
/ with mounting material
/ drilling distance: 35 mm
/ diameter drill hole: 6 mm
/ suitable for shower

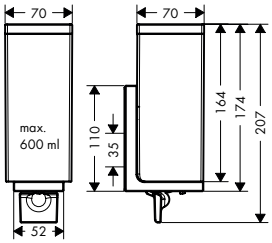

Finish	Code no.
Chrome	42610000
Brushed Bronze	42610140
Brushed Black Chrome	42610340
Matt Black	42610670
Brushed Nickel	42610820
Polished Gold Optic	42610990
AXOR FinishPlus*	42610XXX

AXOR Universal Rectangular Soap dish

Features

/ wall-mounted
/ material shelf: glass
/ holder material: metal
/ with mounting material
/ concealed fastening
/ drilling distance: 35 mm
/ diameter drill hole: 6 mm

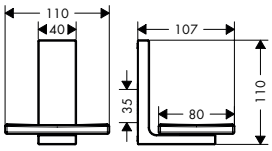

Finish	Code no.
Chrome	42605000
Brushed Bronze	42605140
Brushed Black Chrome	42605340
Matt Black	42605670
Brushed Nickel	42605820
Polished Gold Optic	42605990
AXOR FinishPlus*	42605XXX

Measurements within scale drawings are in mm.
Technical specifications and units of measure are subject to change.

AXOR Universal Rectangular Grab bar

Features

/ wall-mounted
/ material: metal
/ length: 340 mm
/ with mounting material
/ concealed fastening
/ drilling distance: 300 mm
/ diameter drill hole: 6 mm
/ suitable for shower

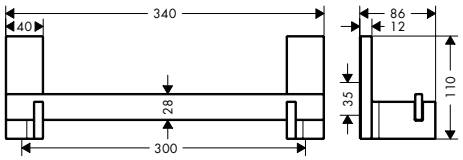

Finish	Code no.
Chrome	42613000
Brushed Bronze	42613140
Brushed Black Chrome	42613340
Matt Black	42613670
Brushed Nickel	42613820
Polished Gold Optic	42613990
AXOR FinishPlus*	42613XXX

AXOR Universal Rectangular Towel holders

Features of all variants

/ wall-mounted
/ material: metal
/ swivel: fixed
/ length: 380 mm
/ with mounting material
/ drilling distance: 35 mm
/ diameter drill hole: 6 mm
/ concealed fastening

single

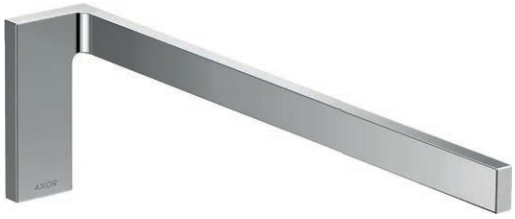

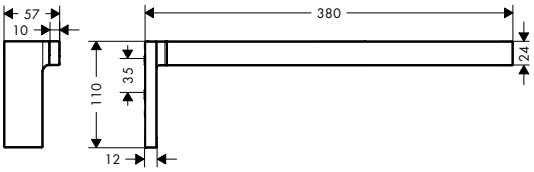

double

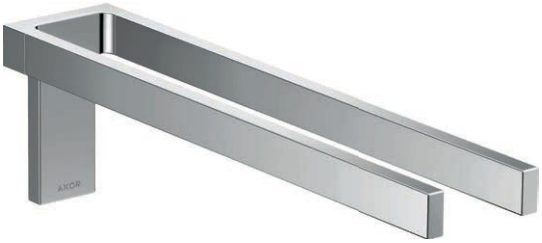

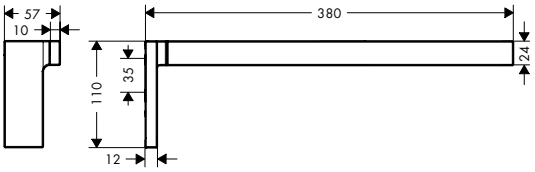

Overview variants

Number of holder	Finish	Code no.
1 holder	Chrome	42626000
	Brushed Bronze	42626140
	Brushed Black Chrome	42626340
	Matt Black	42626670
	Brushed Nickel	42626820
	Polished Gold Optic	42626990
	AXOR FinishPlus*	42626XXX
2 holders	Chrome	42622000
	Brushed Bronze	42622140
	Brushed Black Chrome	42622340
	Matt Black	42622670
	Brushed Nickel	42622820
	Polished Gold Optic	42622990
	AXOR FinishPlus*	42622XXX

*AXOR FinishPlus: For further AXOR FinishPlus surfaces please see the AXOR FinishPlus overview on page 44.

AXOR Universal Rectangular Towel ring

Features

/ wall-mounted
/ material: metal
/ swivel: swivelling
/ with mounting material
/ concealed fastening
/ drilling distance: 35 mm
/ diameter drill hole: 6 mm

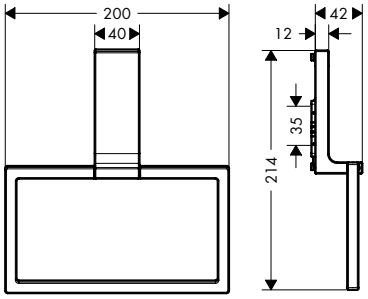

Finish	Code no.
Chrome	42623000
Brushed Bronze	42623140
Brushed Black Chrome	42623340
Matt Black	42623670
Brushed Nickel	42623820
Polished Gold Optic	42623990
AXOR FinishPlus*	42623XXX

AXOR Universal Rectangular Towel hook

Features

/ wall-mounted
/ material: metal
/ with mounting material
/ concealed fastening
/ drilling distance: 35 mm
/ diameter drill hole: 6 mm

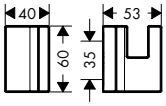

Finish	Code no.
Chrome	42611000
Brushed Bronze	42611140
Brushed Black Chrome	42611340
Matt Black	42611670
Brushed Nickel	42611820
Polished Gold Optic	42611990
AXOR FinishPlus*	42611XXX

AXOR Universal Rectangular Bath towel rails

Features of all variants

/ wall-mounted
/ material: metal
/ with mounting material
/ diameter drill hole: 6 mm

600/800

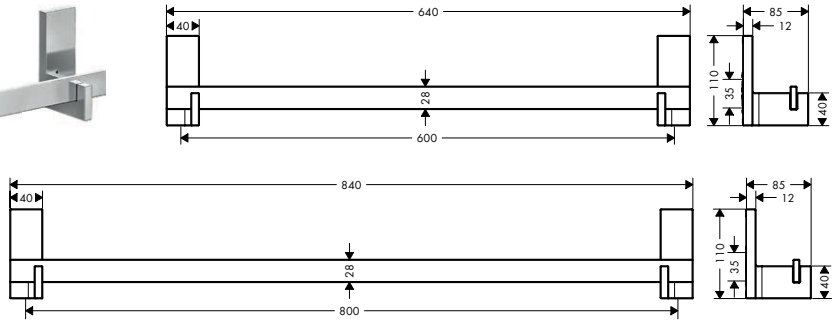

Overview variants

	Product dimensions (mm)	Finish	Code no.
	600	Chrome	42661000
		Brushed Bronze	42661140
		Brushed Black Chrome	42661340
		Matt Black	42661670
		Brushed Nickel	42661820
		Polished Gold Optic	42661990
		AXOR FinishPlus*	42661XXX

Measurements within scale drawings are in mm.
Technical specifications and units of measure are subject to change.

AXOR Universal Rectangular Bath towel rails

Overview variants

	Product dimensions (mm)	Finish	Code no.
	800	Chrome	42683000
		Brushed Bronze	42683140
		Brushed Black Chrome	42683340
		Matt Black	42683670
		Brushed Nickel	42683820
		Polished Gold Optic	42683990
		AXOR FinishPlus*	42683XXX

AXOR Universal Rectangular Shelf 300

Features

/ wall-mounted
/ material shelf: metal
/ length: 300 mm
/ with mounting material
/ concealed fastening
/ drilling distance: 200 mm
/ diameter drill hole: 6 mm
/ suitable for suitable for shower

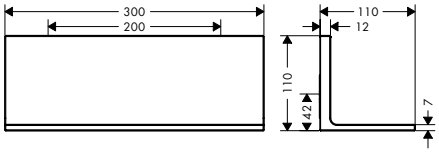

Finish	Code no.
Chrome	42644000
Brushed Bronze	42644140
Brushed Black Chrome	42644340
Matt Black	42644670
Brushed Nickel	42644820
Polished Gold Optic	42644990
AXOR FinishPlus*	42644XXX

AXOR Universal Rectangular Shower door handle

Features

/ material: metal
/ holder material: metal
/ with mounting material
/ thickness of glass: 6 - 12 mm
/ diameter drill hole: 6 mm
/ concealed fastening

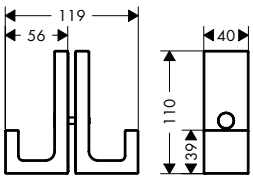

Finish	Code no.
Chrome	42639000
Brushed Bronze	42639140
Brushed Black Chrome	42639340
Matt Black	42639670
Brushed Nickel	42639820
Polished Gold Optic	42639990
AXOR FinishPlus*	42639XXX

*AXOR FinishPlus: For further AXOR FinishPlus surfaces please see the AXOR FinishPlus overview on page 44.

AXOR Universal Rectangular Toilet paper holders

Features of all variants

/ wall-mounted
/ material: metal
/ with mounting material
/ concealed fastening
/ drilling distance: 35 mm
/ diameter drill hole: 6 mm

single

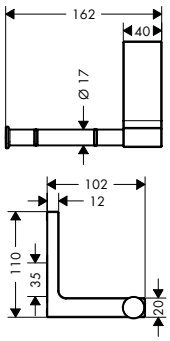

double

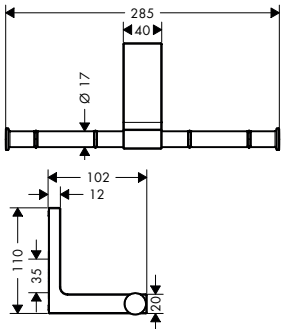

Overview variants

	Version	Finish	Code no.
	single	Chrome	42656000
		Brushed Bronze	42656140
		Brushed Black Chrome	42656340
		Matt Black	42656670
		Brushed Nickel	42656820
		Polished Gold Optic	42656990
		AXOR FinishPlus*	42656XXX
	double	Chrome	42657000
		Brushed Bronze	42657140
		Brushed Black Chrome	42657340
		Matt Black	42657670
		Brushed Nickel	42657820
		Polished Gold Optic	42657990
		AXOR FinishPlus*	42657XXX

AXOR Universal Rectangular Spare roll holder

Features

/ wall-mounted
/ material: metal
/ with mounting material
/ concealed fastening
/ drilling distance: 35 mm
/ diameter drill hole: 6 mm

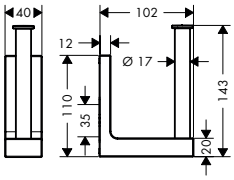

Finish	Code no.
Chrome	42654000
Brushed Bronze	42654140
Brushed Black Chrome	42654340
Matt Black	42654670
Brushed Nickel	42654820
Polished Gold Optic	42654990
AXOR FinishPlus*	42654XXX

Measurements within scale drawings are in mm.
Technical specifications and units of measure are subject to change.

AXOR Universal Rectangular Toilet brush holder wall-mounted

Features

/ wall-mounted
/ material: metal
/ with cover lid
/ with removable insert
/ with mounting material
/ concealed fastening
/ drilling distance: 35 mm
/ diameter drill hole: 6 mm

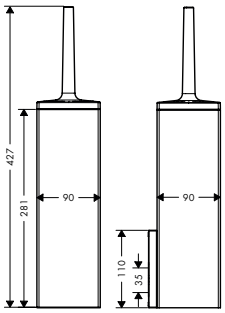

Finish	Code no.
Chrome	42655000
Brushed Bronze	42655140
Brushed Black Chrome	42655340
Matt Black	42655670
Brushed Nickel	42655820
Polished Gold Optic	42655990
AXOR FinishPlus*	42655XXX

Optional parts:		Finish	Code no.
	Replacement toilet brush without stick	Black	40068000
	Replacement toilet brush without stick	White	40088000

AXOR Universal Rectangular Shaving mirror

Features

/ material: mirror glass
/ material frame: metal
/ mirror is inclinable
/ enlargement: 1 x magnification, 1,7 x magnification
/ with mounting material
/ concealed fastening
/ drilling distance: 35 mm
/ diameter drill hole: 6 mm
/ wall-mounted

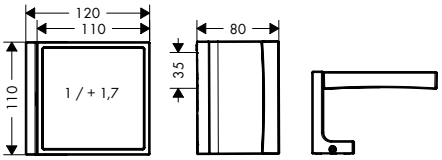

Finish	Code no.
Chrome	42649000
Brushed Bronze	42649140
Brushed Black Chrome	42649340
Matt Black	42649670
Brushed Nickel	42649820
Polished Gold Optic	42649990
AXOR FinishPlus*	42649XXX

*AXOR FinishPlus: For further AXOR FinishPlus surfaces please see the AXOR FinishPlus overview on page 44.

AXOR Universal Circular Toothbrush tumbler

Features

/ wall-mounted
/ material: metal, glass
/ holder material: metal
/ with mounting material
/ concealed fastening
/ drilling distance: 35 mm
/ diameter drill hole: 6 mm

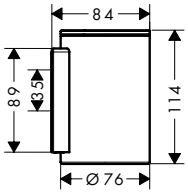

Finish	Code no.
Chrome	42804000
Brushed Bronze	42804140
Brushed Black Chrome	42804340
Matt Black	42804670
Matt White	42804700
Brushed Nickel	42804820
Polished Gold Optic	42804990
AXOR FinishPlus*	42804XXX

AXOR Universal Circular Liquid soap dispenser

Features

/ wall-mounted
/ holder material: metal
/ material container: metal
/ type of soap: liquid soap
/ filling capacity 300 ml
/ dosage 2 ml
/ with mounting material
/ drilling distance: 35 mm
/ diameter drill hole: 6 mm

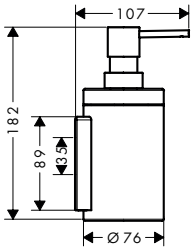

Finish	Code no.
Chrome	42810000
Brushed Bronze	42810140
Brushed Black Chrome	42810340
Matt Black	42810670
Matt White	42810700
Brushed Nickel	42810820
Polished Gold Optic	42810990
AXOR FinishPlus*	42810XXX

AXOR Universal Circular Soap dish

Features

/ wall-mounted
/ with mounting material
/ concealed fastening
/ drilling distance: 35 mm
/ diameter drill hole: 6 mm

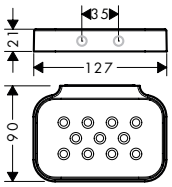

Finish	Code no.
Chrome	42805000
Brushed Bronze	42805140
Brushed Black Chrome	42805340
Matt Black	42805670
Matt White	42805700
Brushed Nickel	42805820
Polished Gold Optic	42805990
AXOR FinishPlus*	42805XXX

Measurements within scale drawings are in mm.
Technical specifications and units of measure are subject to change.

AXOR Universal Circular Tissue box

Features

/ wall-mounted
/ screw fastening
/ material: metal, plastic
/ with mounting material
/ concealed fastening
/ drilling distance: 200 mm
/ diameter drill hole: 6 mm

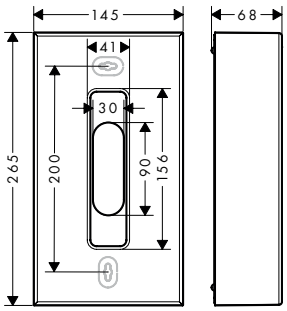

Finish	Code no.
Chrome	42873000
Brushed Bronze	42873140
Brushed Black Chrome	42873340
Matt Black	42873670
Matt White	42873700
Brushed Nickel	42873820
Polished Gold Optic	42873990
AXOR FinishPlus*	42873XXX

AXOR Universal Circular Grab bar

Features

/ wall-mounted
/ material: metal
/ holder material: metal
/ length: 355 mm
/ with mounting material
/ concealed fastening
/ drilling distance: 300 mm
/ diameter drill hole: 6 mm

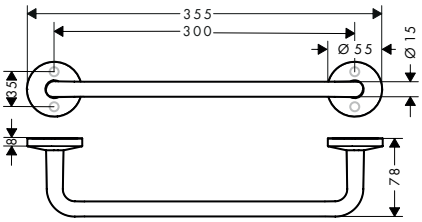

Finish	Code no.
Chrome	42813000
Brushed Bronze	42813140
Brushed Black Chrome	42813340
Matt Black	42813670
Matt White	42813700
Brushed Nickel	42813820
Polished Gold Optic	42813990
AXOR FinishPlus*	42813XXX

AXOR Universal Circular Towel holders

Features of all variants

/ wall-mounted
/ material: metal
/ holder material: metal
/ with mounting material
/ drilling distance: 35 mm
/ diameter drill hole: 6 mm
/ concealed fastening

single

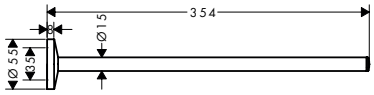

double

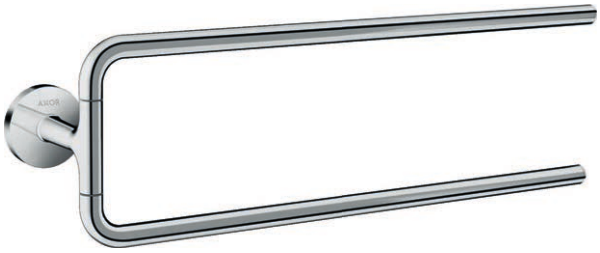

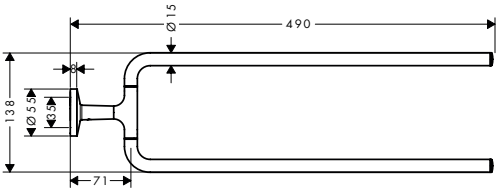

For more information about this product, please see the next page.

*AXOR FinishPlus: For further AXOR FinishPlus surfaces please see the AXOR FinishPlus overview on page 44.

AXOR Universal Circular Towel holders

Overview variants

Number of holder	Swivelling	Finish	Code no.
1 holder	fixed	Chrome	42826000
		Brushed Bronze	42826140
		Brushed Black Chrome	42826340
		Matt Black	42826670
		Matt White	42826700
		Brushed Nickel	42826820
		Polished Gold Optic	42826990
		AXOR FinishPlus*	42826XXX
2 holders	swivelling	Chrome	42822000
		Brushed Bronze	42822140
		Brushed Black Chrome	42822340
		Matt Black	42822670
		Matt White	42822700
		Brushed Nickel	42822820
		Polished Gold Optic	42822990
		AXOR FinishPlus*	42822XXX

AXOR Universal Circular Towel ring

Features

/ wall-mounted
/ material: metal
/ holder material: metal
/ swivel: swivelling
/ with mounting material
/ concealed fastening
/ drilling distance: 35 mm
/ diameter drill hole: 6 mm

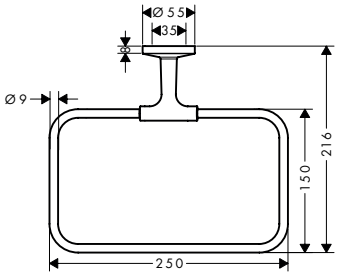

Finish	Code no.
Chrome	42823000
Brushed Bronze	42823140
Brushed Black Chrome	42823340
Matt Black	42823670
Matt White	42823700
Brushed Nickel	42823820
Polished Gold Optic	42823990
AXOR FinishPlus*	42823XXX

AXOR Universal Circular Towel hooks

Features of all variants

/ wall-mounted
/ material: metal
/ with mounting material
/ concealed fastening
/ diameter drill hole: 6 mm

single

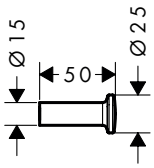

double

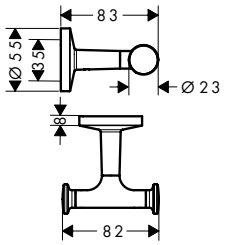

Measurements within scale drawings are in mm.
Technical specifications and units of measure are subject to change.

AXOR Universal Circular Towel hooks

Overview variants

Number of hooks	Finish	Code no.
1 hook	Chrome	42811000
	Brushed Bronze	42811140
	Brushed Black Chrome	42811340
	Matt Black	42811670
	Matt White	42811700
	Brushed Nickel	42811820
	Polished Gold Optic	42811990
	AXOR FinishPlus*	42811XXX
2 hooks	Chrome	42812000
	Brushed Bronze	42812140
	Brushed Black Chrome	42812340
	Matt Black	42812670
	Matt White	42812700
	Brushed Nickel	42812820
	Polished Gold Optic	42812990
	AXOR FinishPlus*	42812XXX

AXOR Universal Circular Bath towel rails

Features of all variants

/ wall-mounted
/ material: metal
/ holder material: metal
/ swivel: fixed
/ with mounting material
/ diameter drill hole: 6 mm
/ concealed fastening

600/800

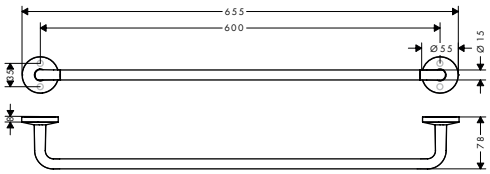

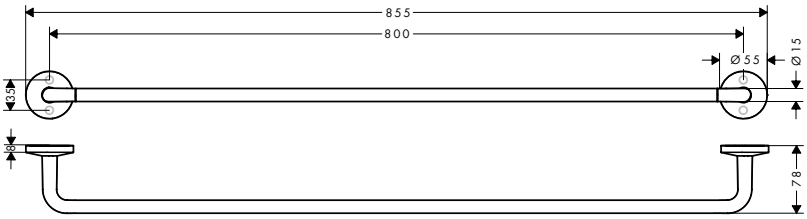

Overview variants

Product dimensions (mm)	Finish	Code no.
600	Chrome	42860000
	Brushed Bronze	42860140
	Brushed Black Chrome	42860340
	Matt Black	42860670
	Matt White	42860700
	Brushed Nickel	42860820
	Polished Gold Optic	42860990
	AXOR FinishPlus*	42860XXX

For more information about this product, please see the next page.

*AXOR FinishPlus: For further AXOR FinishPlus surfaces please see the AXOR FinishPlus overview on page 44.

AXOR Universal Circular Bath towel rails

Overview variants

	Product dimensions (mm)	Finish	Code no.
	800	Chrome	42880000
		Brushed Bronze	42880140
		Brushed Black Chrome	42880340
		Matt Black	42880670
		Matt White	42880700
		Brushed Nickel	42880820
		Polished Gold Optic	42880990
		AXOR FinishPlus*	42880XXX

AXOR Universal Circular Towel rack with towel holder

Features

/ wall-mounted
/ material: metal
/ length: 655 mm
/ with mounting material
/ concealed fastening
/ drilling distance: 600 mm
/ diameter drill hole: 6 mm

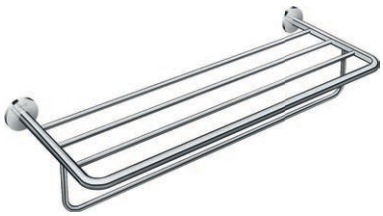

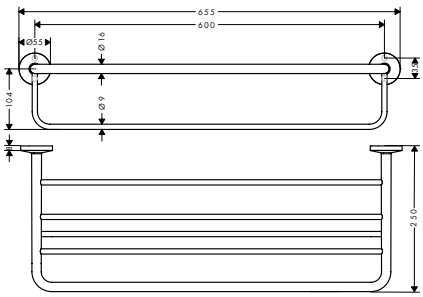

Finish	Code no.
Chrome	42843000
Brushed Bronze	42843140
Brushed Black Chrome	42843340
Matt Black	42843670
Matt White	42843700
Brushed Nickel	42843820
Polished Gold Optic	42843990
AXOR FinishPlus*	42843XXX

AXOR Universal Circular Shelf 400

Features

/ wall-mounted
/ material frame: metal
/ material shelf: metal
/ length: 400 mm
/ with mounting material
/ concealed fastening
/ drilling distance: 285 mm
/ diameter drill hole: 6 mm
/ suitable for suitable for shower

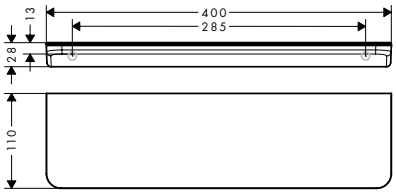

Finish	Code no.
Chrome	42844000
Brushed Bronze	42844140
Brushed Black Chrome	42844340
Matt White	42844700
Matt Black	42844670
Brushed Nickel	42844820
Polished Gold Optic	42844990
AXOR FinishPlus*	42844XXX

Measurements within scale drawings are in mm.
Technical specifications and units of measure are subject to change.

AXOR Universal Circular Toilet paper holders

Features of all variants

/ wall-mounted
/ material: metal
/ with mounting material
/ concealed fastening
/ drilling distance: 35 mm
/ diameter drill hole: 6 mm

single

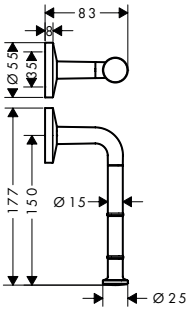

double

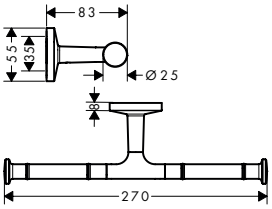

with cover

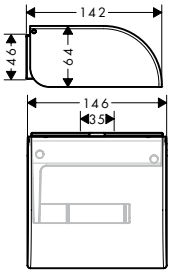

Overview variants

Version	Finish	Code no.
single	Chrome	42856000
	Brushed Bronze	42856140
	Brushed Black Chrome	42856340
	Matt Black	42856670
	Matt White	42856700
	Brushed Nickel	42856820
	Polished Gold Optic	42856990
	AXOR FinishPlus*	42856XXX
double	Chrome	42857000
	Brushed Bronze	42857140
	Brushed Black Chrome	42857340
	Matt Black	42857670
	Matt White	42857700
	Brushed Nickel	42857820
	Polished Gold Optic	42857990
	AXOR FinishPlus*	42857XXX
with cover	Chrome	42858000
	Brushed Bronze	42858140
	Brushed Black Chrome	42858340
	Matt Black	42858670
	Matt White	42858700
	Brushed Nickel	42858820
	Polished Gold Optic	42858990
	AXOR FinishPlus*	42858XXX

*AXOR FinishPlus: For further AXOR FinishPlus surfaces please see the AXOR FinishPlus overview on page 44.

AXOR Universal Circular Toilet brush holder wall-mounted

Features

/ wall-mounted
/ material: metal
/ material recess: matt plastic
/ with cover lid
/ with removable insert
/ with mounting material
/ concealed fastening
/ drilling distance: 35 mm
/ diameter drill hole: 6 mm

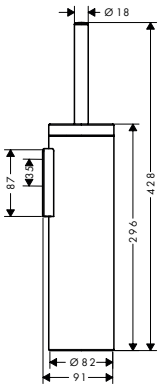

Finish	Code no.
Chrome	42855000
Brushed Bronze	42855140
Brushed Black Chrome	42855340
Matt Black	42855670
Matt White	42855700
Brushed Nickel	42855820
Polished Gold Optic	42855990
AXOR FinishPlus*	42855XXX

Optional parts:		Finish	Code no.
	Replacement toilet brush without stick	Black	40068000
	Replacement toilet brush without stick	White	40088000

AXOR Universal Circular Waste bin

Features

/ free-standing
/ material: metal
/ material recess: plastic
/ capacity: 5 l
/ with removable insert

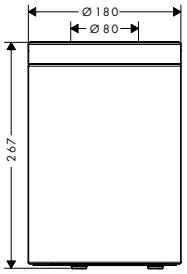

Finish	Code no.
Chrome	42872000
Brushed Bronze	42872140
Brushed Black Chrome	42872340
Matt Black	42872670
Matt White	42872700
Brushed Nickel	42872820
Polished Gold Optic	42872990
AXOR FinishPlus*	42872XXX

Measurements within scale drawings are in mm.
Technical specifications and units of measure are subject to change.

AXOR Universal Circular Shaving mirror

Features

/ material: mirror glass
/ material frame: metal
/ mirror is inclinable
/ swivelling
/ enlargement: approx. 5 x magnification
/ with mounting material
/ concealed fastening
/ drilling distance: 51 mm
/ diameter drill hole: 6 mm
/ wall-mounted

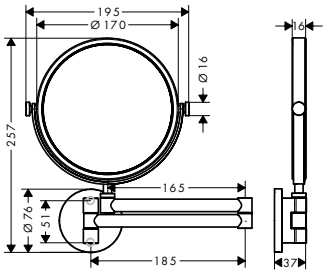

Finish	Code no.
Chrome	42849000
Brushed Bronze	42849140
Brushed Black Chrome	42849340
Matt Black	42849670
Matt White	42849700
Brushed Nickel	42849820
Polished Gold Optic	42849990
AXOR FinishPlus*	42849XXX

AXOR Universal Circular Wall mirror

Features

/ material: mirror glass
/ material frame: metal
/ with mounting material
/ concealed fastening
/ drilling distance: 260 mm
/ diameter drill hole: 6 mm
/ wall-mounted

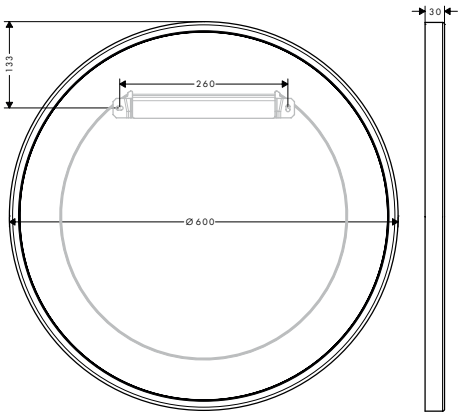

Finish	Code no.
Chrome	42848000
Matt Black	42848670
Matt White	42848700

*AXOR FinishPlus: For further AXOR FinishPlus surfaces please see the AXOR FinishPlus overview on page 44.

AXOR Universal Softsquare Toothbrush tumbler

Features

/ wall-mounted
/ adapter set no.42870XXX must be used when installing on a rail
/ material: metal, glass
/ holder material: metal
/ with mounting material
/ concealed fastening
/ drilling distance: 108 mm
/ diameter drill hole: 6 mm

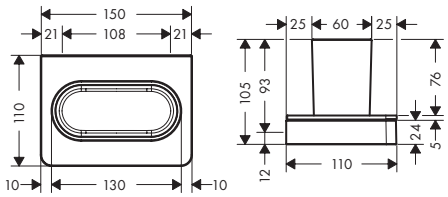

Finish	Code no.
Chrome	42834000
Brushed Bronze	42834140
Brushed Black Chrome	42834340
Matt Black	42834670
Polished Gold Optic	42834990
AXOR FinishPlus*	42834XXX

Optional parts:

AXOR Universal Softsquare Adapter set

Finish	Code no.
Chrome	42870000
Brushed Bronze	42870140
Brushed Black Chrome	42870340
Matt Black	42870670
Polished Gold Optic	42870990
AXOR FinishPlus*	42870XXX

AXOR Universal Softsquare Liquid soap dispenser with shelf

Features

/ wall-mounted
/ adapter set no.42870XXX must be used when installing on a rail
/ holder material: metal
/ material container: glass
/ type of soap: liquid soap
/ filling capacity 180 ml
/ dosage 0.5 ml
/ with mounting material
/ drilling distance: 108 mm
/ diameter drill hole: 6 mm
/ can be used additional as a shelf
/ suitable for shower

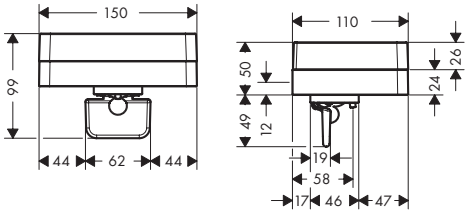

Finish	Code no.
Chrome	42819000
Brushed Bronze	42819140
Brushed Black Chrome	42819340
Matt Black	42819670
Polished Gold Optic	42819990
AXOR FinishPlus*	42819XXX

Optional parts:

AXOR Universal Softsquare Adapter set

Finish	Code no.
Chrome	42870000
Brushed Bronze	42870140
Brushed Black Chrome	42870340
Matt Black	42870670
Polished Gold Optic	42870990
AXOR FinishPlus*	42870XXX

Measurements within scale drawings are in mm.
Technical specifications and units of measure are subject to change.

AXOR Universal Softsquare Soap dish/ shelf

Features

/ wall-mounted
/ adapter set no.42870XXX must be used when installing on a rail
/ combinable with roll holder no.42836XXX (adapter no.42870XXX necessary)
/ material recess: ceramic
/ with mounting material
/ concealed fastening
/ drilling distance: 108 mm
/ diameter drill hole: 6 mm

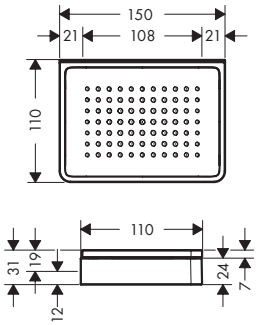

Finish	Code no.
Chrome	42803000
Brushed Bronze	42803140
Brushed Black Chrome	42803340
Matt Black	42803670
Polished Gold Optic	42803990
AXOR FinishPlus*	42803XXX

Optional parts:		Finish	Code no.
	AXOR Universal Softsquare Adapter set	Chrome	42870000
		Brushed Bronze	42870140
		Brushed Black Chrome	42870340
		Matt Black	42870670
		Polished Gold Optic	42870990
		AXOR FinishPlus*	42870XXX
	AXOR Universal Softsquare Toilet paper holder with cover	Chrome	42836000
		Brushed Bronze	42836140
		Brushed Black Chrome	42836340
		Matt Black	42836670
		Polished Gold Optic	42836990
		AXOR FinishPlus*	42836XXX

AXOR Universal Softsquare Rail grab bar 300 mm

Features

/ wall-mounted
/ across or upright mountable
/ material: metal
/ holder material: metal
/ length: 374 mm
/ with mounting material
/ concealed fastening
/ drilling distance: 280 mm
/ diameter drill hole: 6 mm
/ use as a rail for accessoiries and grab bar

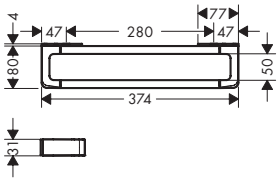

Finish	Code no.
Chrome	42830000
Brushed Bronze	42830140
Brushed Black Chrome	42830340
Matt Black	42830670
Polished Gold Optic	42830990
AXOR FinishPlus*	42830XXX

For more information about this product, please see the next page.

*AXOR FinishPlus: For further AXOR FinishPlus surfaces please see the AXOR FinishPlus overview on page 44.

AXOR Universal Softsquare Rail grab bar 300 mm

Optional parts:		Finish	Code no.
	AXOR Universal Softsquare Mounting kit for two-sided glass installation		42841000
	AXOR Universal Softsquare Cover for rail	Chrome	42871000
		Brushed Bronze	42871140
		Brushed Black Chrome	42871340
		Matt Black	42871670
		Polished Gold Optic	42871990
		AXOR FinishPlus*	42871XXX
	AXOR Citterio E Shower slider	Chrome	92726000
		AXOR FinishPlus*	92726XXX

AXOR Universal Softsquare Towel holder twin-handle

Features

/ wall-mounted
/ material: metal
/ holder material: metal
/ swivelling
/ length: 409 mm
/ with mounting material
/ diameter drill hole: 6 mm
/ concealed fastening

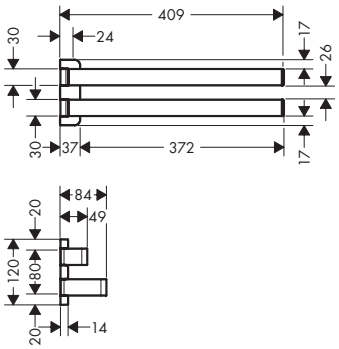

Finish	Code no.
Chrome	42821000
Brushed Bronze	42821140
Brushed Black Chrome	42821340
Matt Black	42821670
Polished Gold Optic	42821990
AXOR FinishPlus*	42821XXX

AXOR Universal Softsquare Towel hook

Features

/ wall-mounted
/ material: metal
/ with mounting material
/ concealed fastening
/ drilling distance: 35 mm
/ diameter drill hole: 6 mm

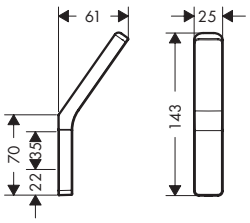

Finish	Code no.
Chrome	42801000
Brushed Bronze	42801140
Brushed Black Chrome	42801340
Matt Black	42801670
Stainless Steel Optic	42801800
Polished Gold Optic	42801990
AXOR FinishPlus*	42801XXX

Measurements within scale drawings are in mm.
Technical specifications and units of measure are subject to change.

AXOR Universal Softsquare Bath towel rails

Features of all variants

/ wall-mounted
/ material: metal
/ holder material: metal
/ fixed
/ with mounting material
/ diameter drill hole: 6 mm
/ use as a rail for accessories and bath towel holder
/ concealed fastening

600/800

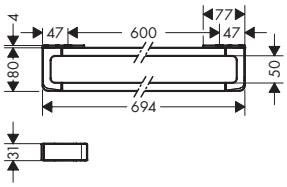

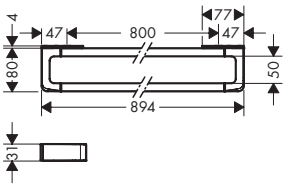

Overview variants

	Product dimensions (mm)	Finish	Code no.
	600	Chrome	42832000
		Brushed Bronze	42832140
		Brushed Black Chrome	42832340
		Matt Black	42832670
		Polished Gold Optic	42832990
		AXOR FinishPlus*	42832XXX
	800	Chrome	42833000
		Brushed Bronze	42833140
		Brushed Black Chrome	42833340
		Matt Black	42833670
		Polished Gold Optic	42833990
		AXOR FinishPlus*	42833XXX

Optional parts:		Finish	Code no.
	AXOR Citterio E Shower slider	Chrome	92726000
		AXOR FinishPlus*	92726XXX
	AXOR Universal Softsquare Mounting kit for two-sided glass installation		42841000
	AXOR Universal Softsquare Cover for rail	Chrome	42871000
		Brushed Bronze	42871140
		Brushed Black Chrome	42871340
		Matt Black	42871670
		Polished Gold Optic	42871990
		AXOR FinishPlus*	42871XXX

*AXOR FinishPlus: For further AXOR FinishPlus surfaces please see the AXOR FinishPlus overview on page 44.

AXOR Universal Softsquare Bath towel shelf

Features

/ wall-mounted
/ material: glass, metal
/ length: 600 mm
/ thickness of glass: 6 mm
/ with mounting material
/ drilling distance: 400 mm
/ diameter drill hole: 6 mm
/ for hanging bathrobes

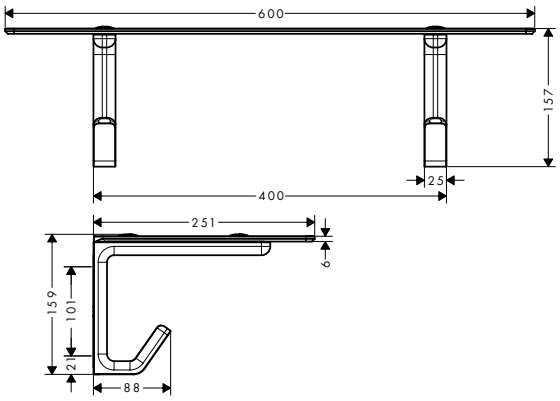

Finish	Code no.
Chrome	42842000
AXOR FinishPlus*	42842XXX

AXOR Universal Softsquare Shelves

Features of all variants

/ wall-mounted
/ combinable with roll holder no.42836XXX (adapter no.42870XXX necessary)
/ material frame: metal
/ material shelf: safety glass
/ with mounting material
/ concealed fastening
/ diameter drill hole: 6 mm
/ suitable for suitable for shower

150

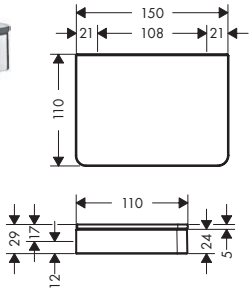

300

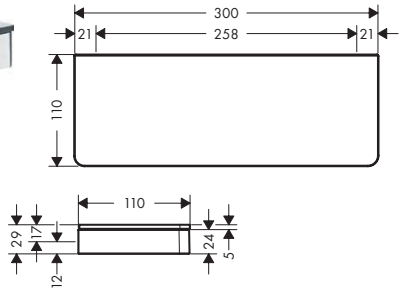

Overview variants

	Product dimensions (mm)	Finish	Code no.
	150	Chrome	42840000
		Brushed Bronze	42840140
		Brushed Black Chrome	42840340
		Matt Black	42840670
		Polished Gold Optic	42840990
		AXOR FinishPlus*	42840XXX
	300	Chrome	42838000
		Brushed Bronze	42838140
		Brushed Black Chrome	42838340
		Polished Gold Optic	42838990
		AXOR FinishPlus*	42838XXX

Optional parts:		Finish	Code no.
	AXOR Universal Softsquare Adapter set	Chrome	42870000
		Brushed Bronze	42870140
		Brushed Black Chrome	42870340
		Matt Black	42870670
		Polished Gold Optic	42870990
		AXOR FinishPlus*	42870XXX

Measurements within scale drawings are in mm.
Technical specifications and units of measure are subject to change.

AXOR Universal Softsquare Shelves

Optional parts:		Finish	Code no.
	AXOR Universal Softsquare Toilet paper holder with cover	Chrome	42836000
		Brushed Bronze	42836140
		Brushed Black Chrome	42836340
		Matt Black	42836670
		Polished Gold Optic	42836990
		AXOR FinishPlus*	42836XXX

AXOR Universal Softsquare Shelf 150/70 for shower

Features

/ wall-mounted
/ adapter set no.42870XXX must be used when installing on a rail
/ holder material: metal
/ material shelf: glass
/ with drain holes
/ with mounting material
/ concealed fastening
/ drilling distance: 108 mm
/ diameter drill hole: 6 mm
/ suitable for suitable for shower

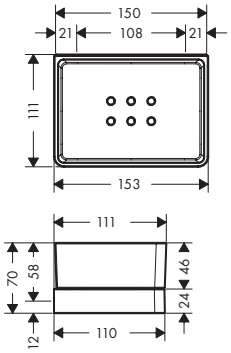

Finish	Code no.
Chrome	42802000
Brushed Bronze	42802140
Brushed Black Chrome	42802340
Polished Gold Optic	42802990
AXOR FinishPlus*	42802XXX

Optional parts:		Finish	Code no.
	AXOR Universal Softsquare Adapter set	Chrome	42870000
		Brushed Bronze	42870140
		Brushed Black Chrome	42870340
		Polished Gold Optic	42870990
		AXOR FinishPlus*	42870XXX

*AXOR FinishPlus: For further AXOR FinishPlus surfaces please see the AXOR FinishPlus overview on page 44.

AXOR Universal Softsquare Shower door handle 444 mm

Features

/ material: metal
/ holder material: metal
/ fixed
/ length: 444 mm
/ with mounting material
/ thickness of glass: 6 - 12 mm
/ drilling distance: 350 mm
/ can be used simultaneously as a bath towel holder
/ concealed fastening

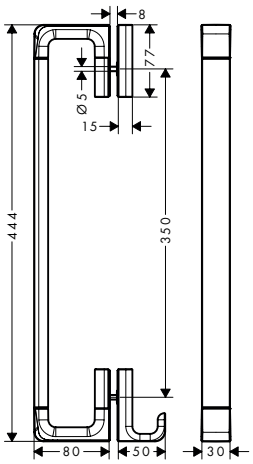

Finish	Code no.
Chrome	42837000
Brushed Bronze	42837140
Brushed Black Chrome	42837340
Matt Black	42837670
Polished Gold Optic	42837990
AXOR FinishPlus*	42837XXX

AXOR Universal Softsquare Toilet paper holders

Features of all variants

/ wall-mounted
/ with mounting material
/ concealed fastening
/ drilling distance: 35 mm
/ diameter drill hole: 6 mm

without cover

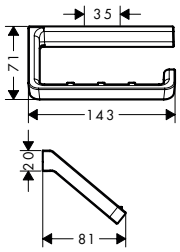

with cover

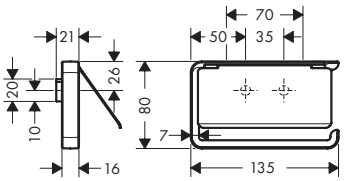

with shelf

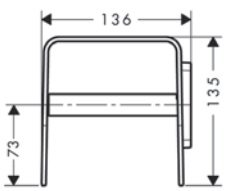

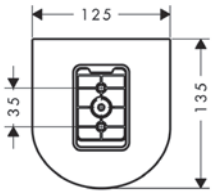

Overview variants

Version	Finish	Code no.
without cover	Chrome	42846000
	Brushed Bronze	42846140
	Brushed Black Chrome	42846340
	Matt Black	42846670
	Polished Gold Optic	42846990
	AXOR FinishPlus*	42846XXX

Measurements within scale drawings are in mm.
Technical specifications and units of measure are subject to change.

AXOR Universal Softsquare Toilet paper holders

Overview variants

	Version	Finish	Code no.
	with cover	Chrome	42836000
		Brushed Bronze	42836140
		Brushed Black Chrome	42836340
		Matt Black	42836670
		Polished Gold Optic	42836990
		AXOR FinishPlus*	42836XXX
	with shelf	Chrome	42436000
		AXOR FinishPlus*	42436XXX

Optional parts:		For	Finish	Code no.
	AXOR Universal Softsquare Adapter set	42836XXX	Chrome	42870000
			Brushed Bronze	42870140
			Brushed Black Chrome	42870340
			Matt Black	42870670
			Polished Gold Optic	42870990
			AXOR FinishPlus*	42870XXX
	AXOR Universal Softsquare Shelf 300	42836XXX	Chrome	42838000
			Brushed Bronze	42838140
			Brushed Black Chrome	42838340
			Polished Gold Optic	42838990
			AXOR FinishPlus*	42838XXX
	AXOR Universal Softsquare Soap dish/ shelf	42836XXX	Chrome	42803000
			Brushed Bronze	42803140
			Brushed Black Chrome	42803340
			Matt Black	42803670
			Polished Gold Optic	42803990
			AXOR FinishPlus*	42803XXX

AXOR Universal Softsquare Toilet brush holder wall-mounted

Features

/ wall-mounted
/ material: metal, glass
/ material recess: glass
/ with removable insert
/ with mounting material
/ concealed fastening
/ drilling distance: 108 mm
/ diameter drill hole: 6 mm

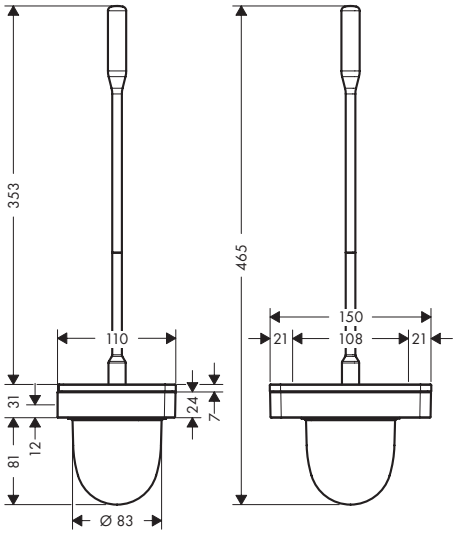

Finish	Code no.
Chrome	42835000
Brushed Bronze	42835140
Brushed Black Chrome	42835340
Matt Black	42835670
Polished Gold Optic	42835990
AXOR FinishPlus*	42835XXX

For more information about this product, please see the next page.

*AXOR FinishPlus: For further AXOR FinishPlus surfaces please see the AXOR FinishPlus overview on page 44.

AXOR Universal Softsquare Toilet brush holder wall-mounted

Optional parts:	Finish	Code no.
Replacement toilet brush without stick	White	40088000

AXOR Universal Softsquare Adapter set

Features

/ for assembling AXOR Universal Accessories on a rail

/ for combination of soap dish/shelf no.42803XXX or shelf 300 mm no.42838XXX with roll holder no.42836XXX

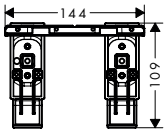

Finish	Code no.
Chrome	42870000
Brushed Bronze	42870140
Brushed Black Chrome	42870340
Matt Black	42870670
Polished Gold Optic	42870990
AXOR FinishPlus*	42870XXX

AXOR Universal Softsquare Cover for rail

Features

/ for covering the mounting holes if a continuous cover is not desired

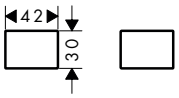

Finish	Code no.
Chrome	42871000
Brushed Bronze	42871140
Brushed Black Chrome	42871340
Matt Black	42871670
Polished Gold Optic	42871990
AXOR FinishPlus*	42871XXX

AXOR Universal Softsquare Mounting kit for two-sided glass installation

Features

/ thickness of glass: 6 - 12 mm

/ diameter drill hole: 6 mm

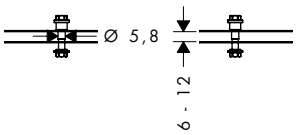

	Code no.
	42841000

Measurements within scale drawings are in mm.
Technical specifications and units of measure are subject to change.

AXOR Montreux Toothbrush tumbler

Features

/ wall-mounted
/ material: metal, porcelain
/ holder material: metal
/ with mounting material
/ concealed fastening
/ drilling distance: 35 mm
/ diameter drill hole: 6 mm

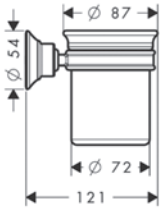

Finish	Code no.
Chrome	42134000
Brushed Black Chrome	42134340
Brushed Nickel	42134820
AXOR FinishPlus*	42134XXX

AXOR Montreux Liquid soap dispenser

Features

/ wall-mounted
/ holder material: metal
/ material container: porcelain
/ type of soap: liquid soap
/ filling capacity 300 ml
/ with mounting material
/ concealed fastening
/ drilling distance: 35 mm
/ diameter drill hole: 6 mm

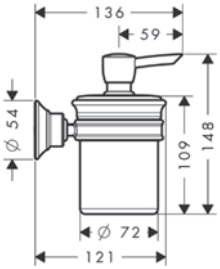

Finish	Code no.
Chrome	42019000
Brushed Black Chrome	42019340
Brushed Nickel	42019820
AXOR FinishPlus*	42019XXX

AXOR Montreux Soap dish

Features

/ wall-mounted
/ material recess: porcelain
/ holder material: metal
/ with mounting material
/ concealed fastening
/ drilling distance: 35 mm
/ diameter drill hole: 6 mm

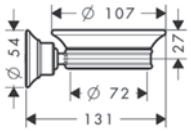

Finish	Code no.
Chrome	42033000
Brushed Black Chrome	42033340
Brushed Nickel	42033820
AXOR FinishPlus*	42033XXX

*AXOR FinishPlus: For further AXOR FinishPlus surfaces please see the AXOR FinishPlus overview on page 44.

AXOR Montreux Corner basket 160/101

Features

/ wall-mounted
/ with mounting material
/ drilling distance: 35 mm
/ diameter drill hole: 6 mm

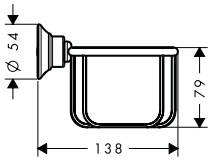

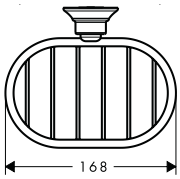

Finish	Code no.
Chrome	42065000
Brushed Black Chrome	42065340
Brushed Nickel	42065820
AXOR FinishPlus*	42065XXX

AXOR Montreux Corner basket 160/83

Features

/ with mounting material

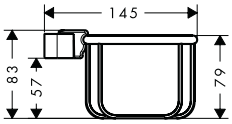

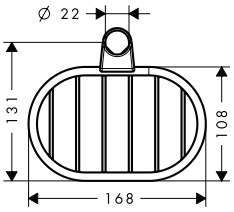

Finish	Code no.
Chrome	42066000
Brushed Black Chrome	42066340
Brushed Nickel	42066820
AXOR FinishPlus*	42066XXX

AXOR Montreux Towel holder

Features

/ wall-mounted
/ material: metal
/ holder material: metal
/ swivel: fixed
/ length: 433 mm
/ with mounting material
/ diameter drill hole: 10 mm
/ concealed fastening

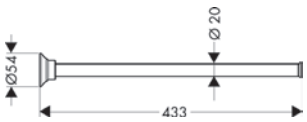

Finish	Code no.
Chrome	42020000
Brushed Black Chrome	42020340
Brushed Nickel	42020820
AXOR FinishPlus*	42020XXX

Measurements within scale drawings are in mm.
Technical specifications and units of measure are subject to change.

AXOR Montreux Towel ring

Features

/ wall-mounted
/ material: metal
/ holder material: metal
/ swivel: swivelling
/ with mounting material
/ concealed fastening
/ drilling distance: 35 mm
/ diameter drill hole: 6 mm

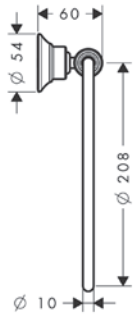

Finish	Code no.
Chrome	42021000
Brushed Black Chrome	42021340
Brushed Nickel	42021820
AXOR FinishPlus*	42021XXX

AXOR Montreux Towel hook

Features

/ wall-mounted
/ material: metal
/ with mounting material
/ concealed fastening
/ diameter drill hole: 6 mm

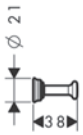

Finish	Code no.
Chrome	42137000
Brushed Black Chrome	42137340
Brushed Nickel	42137820
AXOR FinishPlus*	42137XXX

AXOR Montreux Bath towel rails

Features of all variants

/ wall-mounted
/ material: metal
/ holder material: metal
/ with mounting material
/ diameter drill hole: 6 mm
/ concealed fastening

600/800

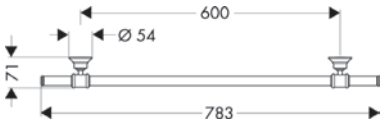

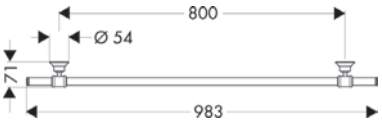

Overview variants

	Product dimensions (mm)	Finish	Code no.
	600	Chrome	42060000
		Brushed Black Chrome	42060340
		Brushed Nickel	42060820
		AXOR FinishPlus*	42060XXX
	800	Chrome	42080000
		Brushed Black Chrome	42080340
		Brushed Nickel	42080820
		AXOR FinishPlus*	42080XXX

*AXOR FinishPlus: For further AXOR FinishPlus surfaces please see the AXOR FinishPlus overview on page 44.

AXOR Montreux Toilet paper holder with cover

Features

/ wall-mounted
/ material: metal
/ with mounting material
/ concealed fastening
/ drilling distance: 35 mm
/ diameter drill hole: 6 mm

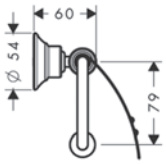

Finish	Code no.
Chrome	42036000
Brushed Black Chrome	42036340
Brushed Nickel	42036820
AXOR FinishPlus*	42036XXX

AXOR Montreux Toilet paper holder

Features

/ wall-mounted
/ material: metal
/ holder material: metal
/ with mounting material
/ concealed fastening
/ diameter drill hole: 10 mm
/ length 159 mm
/ for spare rolls

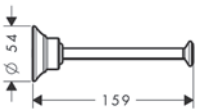

Finish	Code no.
Chrome	42028000
Brushed Black Chrome	42028340
Brushed Nickel	42028820
AXOR FinishPlus*	42028XXX

Measurements within scale drawings are in mm.
Technical specifications and units of measure are subject to change.

AXOR Montreux Toilet brush holder wall-mounted

Features

/ wall-mounted
/ material: metal, porcelain
/ material recess: porcelain
/ with removable insert
/ with mounting material
/ concealed fastening
/ drilling distance: 35 mm
/ diameter drill hole: 6 mm

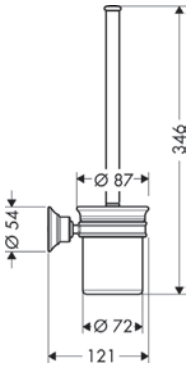

Finish	Code no.
Chrome	42035000
Brushed Black Chrome	42035340
Brushed Nickel	42035820
AXOR FinishPlus*	42035XXX

Optional parts:	Finish	Code no.
Replacement toilet brush without stick	White	40088000

AXOR Montreux Shaving mirror

Features

/ material: mirror glass
/ material frame: metal
/ mirror is inclinable
/ swivelling
/ enlargement: 1 x magnification
/ with mounting material
/ concealed fastening
/ drilling distance: 35 mm
/ diameter drill hole: 6 mm
/ wall-mounted

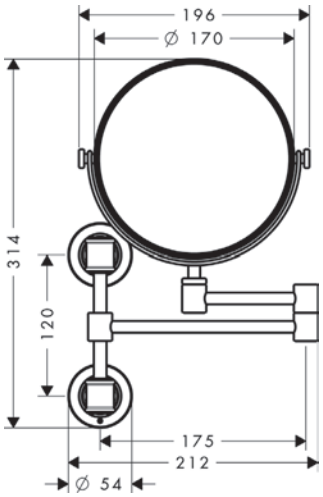

Finish	Code no.
Chrome	42090000
Brushed Black Chrome	42090340
Brushed Nickel	42090820
AXOR FinishPlus*	42090XXX

*AXOR FinishPlus: For further AXOR FinishPlus surfaces please see the AXOR FinishPlus overview on page 44.

AXOR ShowerSolutions Shelves

Features of all variants

/ for use with either vertical or horizontal installation of the basic set
/ material frame: metal
/ material shelf: metal
/ with mounting material
/ concealed fastening
/ drilling distance: 72 mm
/ diameter drill hole: 6 mm

240/120

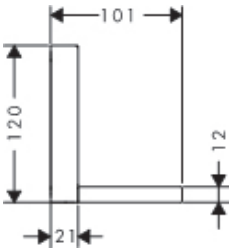

120/120

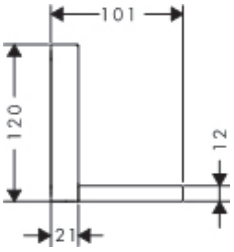

Overview variants

	Product dimensions (mm)	Finish	Code no.
	240/120	Chrome	40873000
		AXOR FinishPlus*	40873XXX
	120/120	Chrome	40872000
		AXOR FinishPlus*	40872XXX

Optional parts:		For	Code no.
	AXOR ShowerSolutions Basic set/ waterconducting unit for shelf 240/120 for concealed installation	40873XXX	40878180
	AXOR ShowerSolutions Basic set/ waterconducting unit for shelf 120/120 for concealed installation	40872XXX	40877180

Measurements within scale drawings are in mm.
Technical specifications and units of measure are subject to change.

AXOR FlushPlate Flush plate

Features

/ suitable for Geberit Sigma
/ for 2-volume flushing system
/ material: metal
/ dimensions: 164 x 246 x 12 mm (HxWxD)
/ mechanical flush plate with manual flush actuation
/ operation: from front with two buttons

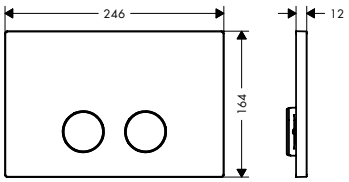

Finish	Code no.
Chrome	42530000
Polished Gold Optic	42530990
Brushed Bronze	42530140
Brushed Nickel	42530820
Brushed Black Chrome	42530340
Matt Black	42530670
Matt White	42530700
AXOR FinishPlus*	42530XXX

*AXOR FinishPlus: For further AXOR FinishPlus surfaces please see the AXOR FinishPlus overview on page 44.

ELECTRONIC
AXOR

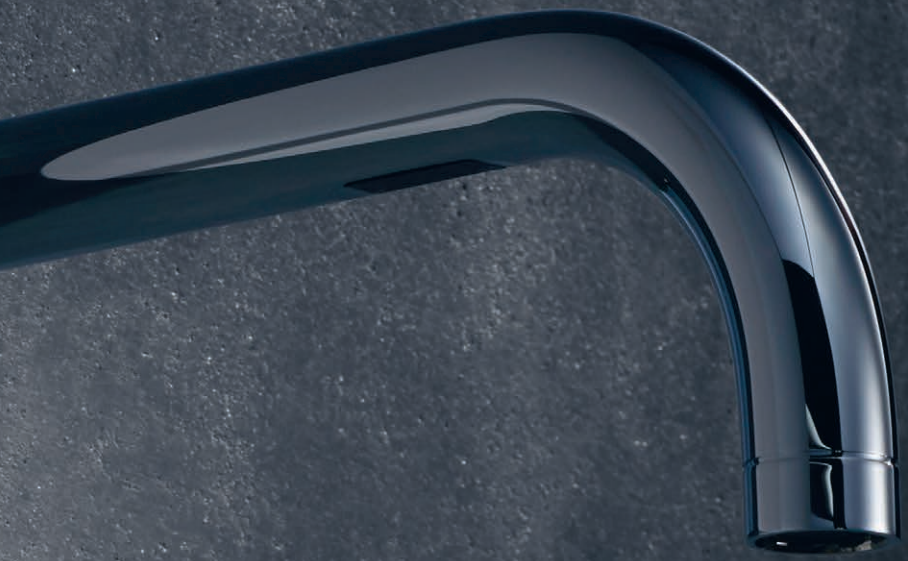

AXOR Starck

AXOR Starck Organic

AXOR Citterio

AXOR Uno

AXOR ELECTRONIC FAUCETS

AXOR Electronic faucets combine functionality and technology with exclusive design known for its proven brand quality. The innovative sensor technology is discreetly integrated so that mixer design can be reduced to the basics. Non-contact faucets are not only hygienic, but also save water: The intelligent electronics release water only when it is actually needed, which protects this natural resource.

AXOR Uno

Minimalist in design, this electronic, wall-mounted mixer has a sensor field on the bottom of the spout.

AXOR Starck Organic

This minimalist, organic faucets saves a great deal of water: The ample mixer shower jet uses just 3.5 l/min. The faucet is available with and without temperature control.

AXOR Starck

Also reduced to the basics is the electronic variant of the purist AXOR Starck basin faucets. Available with and without temperature control.

AXOR Electronic faucets are the perfect combination of technology and design

AXOR Electronic Faucets

Functionality, technology and exclusive design

Electronic mixers by AXOR set standards for comfort, hygiene and design. The non-contact operation makes them perfect for use in public areas such as hotels, restaurants or lounges. But they also make a masterful statement in private bathrooms and meet the highest requirements for efficient water consumption. Combined with outstanding design and functionality.

Design: Philippe Starck, Antonio Citterio, PHOENIX

Characteristic design feature:

Reduced to the bare essentials: The faucets do not need handles because sensor technology controls the water.

The designer's idea:

Masterpieces of comfort, hygiene and design: AXOR Electronic faucets combine sensor control with outstanding design – simply excellent. Masterpieces of non-contact operation.

Special program highlights:

/ AXOR Electronic is available in the design of these collections: AXOR Starck, AXOR Starck Organic, AXOR Citterio and AXOR Uno

/ Sensor control: non-contact means extremely hygienic

/ Efficient water use: Sensor controlled mixers switch off automatically

/ Available in two versions: With temperature preset or temperature control

/ Operates with 230 V power onnection or battery

→ Learn more about AXOR Electronic faucets: axor-design.com

AXOR Starck Electronic basin mixers

Features of all variants

/ ComfortZone 90
/ projection: 103 mm
/ spray type: normal spray
/ maximum flow rate at 3 bar: 5 l/min
/ suitable for continous flow water heaters
/ infrared sensor technology
/ automatic environmental adjustment of infrared sensor
/ adjustable optical range of infrared sensor (2 settings)
/ hygiene rinse activatable (automatic water flow)
/ frequency of hygiene rinse: 24 h
/ flushing time hygiene rinse: 10 s
/ permanent rinse activatable (single water flow for 180 seconds, suitable for thermal disinfection)
/ cleaning mode: manual water stop for washbasin cleaning
/ connection dimension: DN15
/ dirt filters in the connection hoses

pre adjustable

adjustable

Special feature

Technologies

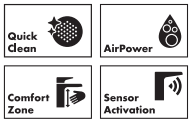

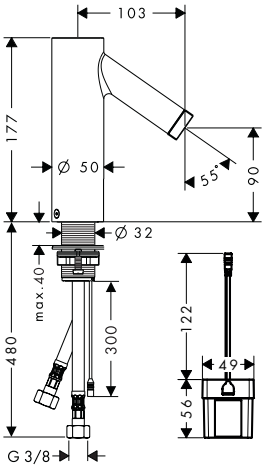

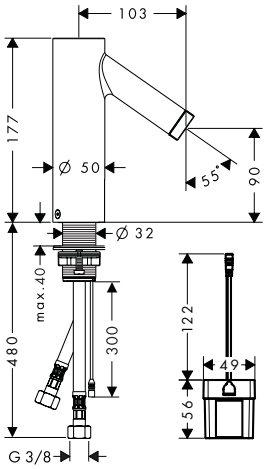

Overview variants

Power supply	Temperature adjustment	Finish	Code no.
battery operation	pre adjustable	Chrome	10106000
		Brushed Black Chrome	10106340
		AXOR FinishPlus*	10106XXX
battery operation	adjustable	Chrome	10101000
		Brushed Black Chrome	10101340
		AXOR FinishPlus*	10101XXX
mains connection	pre adjustable	Chrome	10145000
		Brushed Black Chrome	10145340
		AXOR FinishPlus*	10145XXX
mains connection	adjustable	Chrome	10140000
		Brushed Black Chrome	10140340
		AXOR FinishPlus*	10140XXX

10140XXX This product is only available in the AXOR FinishPlus surface Polished Nickel via AXOR Signature.

Measurements within scale drawings are in mm.
Technical specifications and units of measure are subject to change.

AXOR Starck Organic Electronic basin mixers

Features of all variants

/ ComfortZone 90
/ spray type: shower spray
/ maximum flow rate at 3 bar: 5 l/min
/ with isolated water conduction - without contact with nickel and lead
/ infrared sensor technology
/ automatic environmental adjustment of infrared sensor
/ adjustable optical range of infrared sensor (2 settings)
/ running time: 10 s
/ hygiene rinse activatable (automatic water flow)
/ frequency of hygiene rinse: 24 h
/ flushing time hygiene rinse: 10 s
/ permanent rinse activatable (single water flow for 180 seconds, suitable for thermal disinfection)
/ cleaning mode: manual water stop for washbasin cleaning
/ connection dimension: DN15
/ dirt filters in the connection hoses

pre adjustable

adjustable

Special feature

Technologies

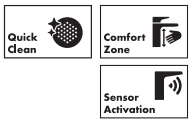

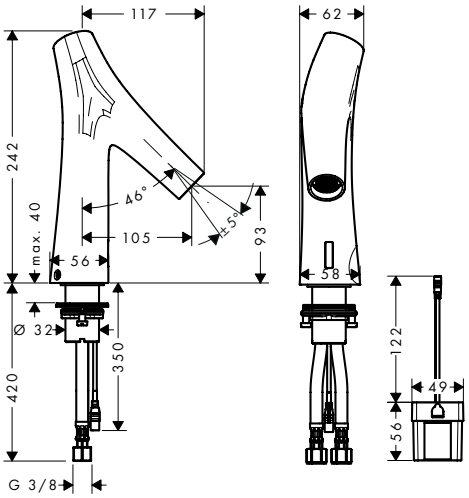

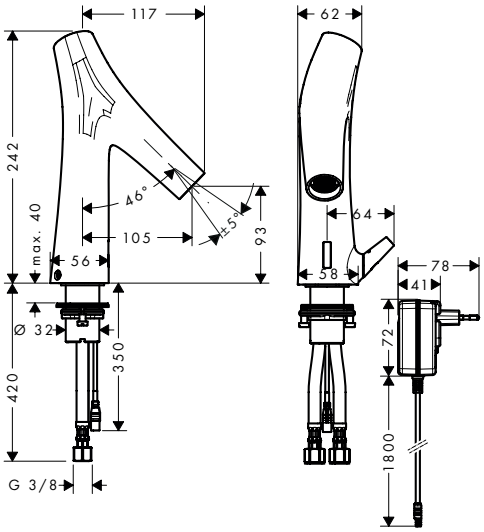

Overview variants

Power supply	Temperature adjustment	Finish	Code no.
battery operation	pre adjustable	Chrome	12172000
		AXOR FinishPlus*	12172XXX
battery operation	adjustable	Chrome	12171000
		AXOR FinishPlus*	12171XXX
mains connection	pre adjustable	Chrome	12174000
		AXOR FinishPlus*	12174XXX
mains connection	adjustable	Chrome	12173000
		AXOR FinishPlus*	12173XXX

*AXOR FinishPlus: For further AXOR FinishPlus surfaces please see the AXOR FinishPlus overview on page 44.

AXOR Citterio Electronic basin mixers

Features of all variants

/ spray type: normal spray
/ maximum flow rate at 3 bar: 5 l/min
/ temperature adjustable via basic set
/ infrared sensor technology
/ automatic environmental adjustment of infrared sensor
/ adjustable optical range of infrared sensor (5 settings)
/ 230 V / 50 Hz mains connection
/ hygiene rinse activatable (automatic water flow)
/ frequency of hygiene rinse: 24 h
/ flushing time hygiene rinse: 10 s
/ permanent rinse activatable (single water flow for 180 seconds, suitable for thermal disinfection)
/ cleaning mode: manual water stop for washbasin cleaning
/ dirt filters in the connection hoses
/ for ideal function please note a minimum distance of 140 mm from the aerators center to the back rim of the wash basin
/ IP degree of protection: IPX5

161

221

Special feature

EcoSmart

Technologies

AirPower

Sensor Activation

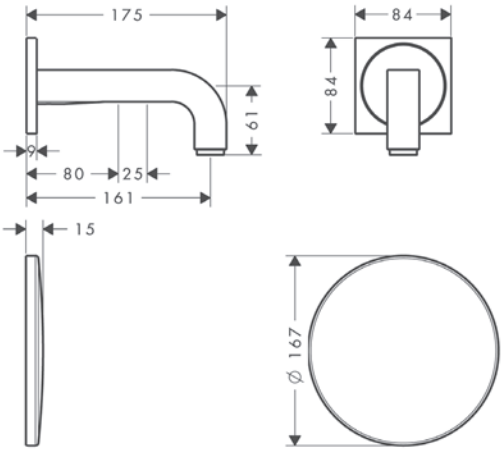

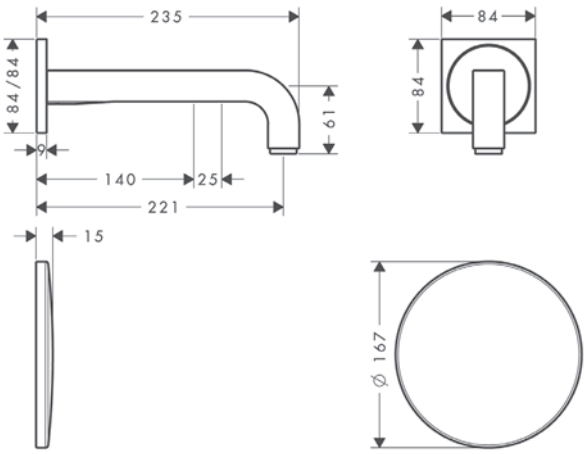

Overview variants

	Projection (mm)	Finish	Code no.
	161	Chrome	39117000
		Brushed Black Chrome	39117340
		AXOR FinishPlus*	39117XXX
	221	Chrome	39118000
		Brushed Black Chrome	39118340
		AXOR FinishPlus*	39118XXX

Required parts:		Code no.
	Basic set for electronic basin mixer for concealed installation wall-mounted	16180180

Optional parts:		Code no.
	Extension 25 mm for basic set for electronic basin mixer wall-mounted	13594000

Measurements within scale drawings are in mm.
Technical specifications and units of measure are subject to change.

AXOR Uno Electronic basin mixers for concealed installation wall-mounted

Features of all variants

/ spray type: normal spray
/ maximum flow rate at 3 bar: 5 l/min
/ temperature adjustable via basic set
/ infrared sensor technology
/ automatic environmental adjustment of infrared sensor
/ adjustable optical range of infrared sensor (5 settings)
/ 230 V / 50 Hz mains connection
/ hygiene rinse activatable (automatic water flow)
/ frequency of hygiene rinse: 24 h
/ flushing time hygiene rinse: 10 s
/ permanent rinse activatable (single water flow for 180 seconds, suitable for thermal disinfection)
/ cleaning mode: manual water stop for washbasin cleaning
/ dirt filters in the connection hoses
/ for ideal function please note a minimum distance of 140 mm from the aerators center to the back rim of the wash basin

165

225

Special feature

EcoSmart

Technologies

AirPower | Sensor Activation

Certificates/declarations

EPD

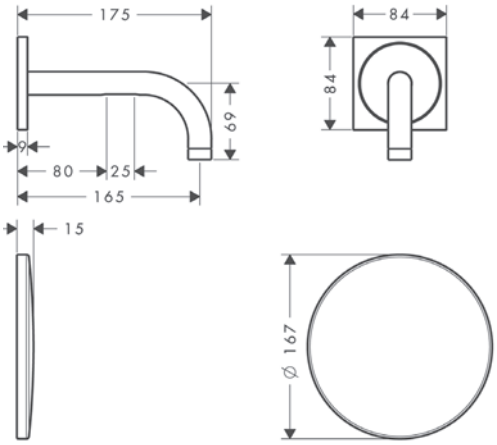

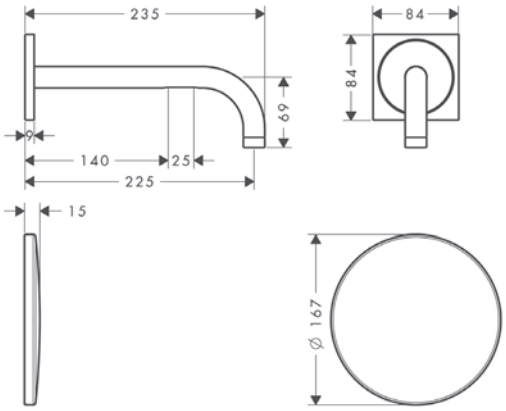

Overview variants

Projection (mm)	Finish	Code no.
165	Chrome	38119000
	Brushed Black Chrome	38119340
	Matt Black	38119670
	Matt White	38119700
	Brushed Nickel	38119820
	AXOR FinishPlus*	38119XXX
225	Chrome	38120000
	Brushed Black Chrome	38120340
	Matt Black	38120670
	Matt White	38120700
	Brushed Nickel	38120820
	AXOR FinishPlus*	38120XXX

Required parts:		Code no.
	Basic set for electronic basin mixer for concealed installation wall-mounted	16180180

Optional parts:		For	Code no.
	Extension 25 mm for basic set for electronic basin mixer wall-mounted	38119XXX	13594000

*AXOR FinishPlus: For further AXOR FinishPlus surfaces please see the AXOR FinishPlus overview on page 44.

AXOR Uno Electronic basin mixers for concealed installation wall-mounted

Features of all variants

/ spray type: laminar spray
/ maximum flow rate at 3 bar: 5 l/min
/ temperature adjustable via basic set
/ infrared sensor technology
/ automatic environmental adjustment of infrared sensor
/ adjustable optical range of infrared sensor (5 settings)
/ 230 V / 50 Hz mains connection
/ hygiene rinse activatable (automatic water flow)
/ frequency of hygiene rinse: 24 h
/ flushing time hygiene rinse: 10 s
/ permanent rinse activatable (single water flow for 180 seconds, suitable for thermal disinfection)
/ cleaning mode: manual water stop for washbasin cleaning
/ dirt filters in the connection hoses
/ for ideal function please note a minimum distance of 140 mm from the aerators center to the back rim of the wash basin

161

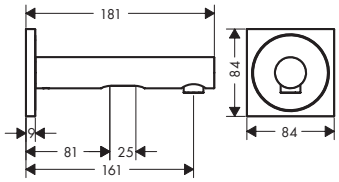

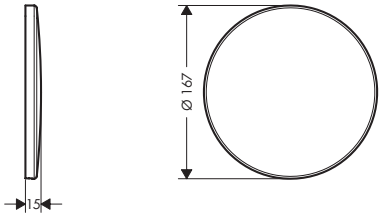

221

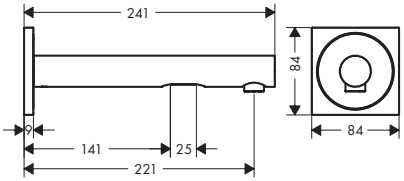

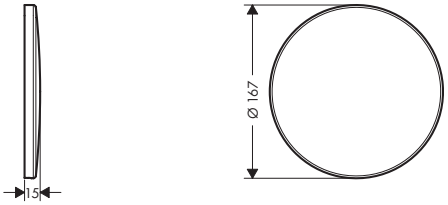

Special feature

EcoSmart

Technologies

Sensor Activation

Overview variants

Projection (mm)	Finish	Code no.
161	Chrome	45110000
	Brushed Black Chrome	45110340
	Brushed Nickel	45110820
	AXOR FinishPlus*	45110XXX
221	Chrome	45111000
	Brushed Black Chrome	45111340
	Brushed Nickel	45111820
	AXOR FinishPlus*	45111XXX

Required parts:		Code no.
	Basic set for electronic basin mixer for concealed installation wall-mounted	16180180

Optional parts:		Code no.
	Extension 25 mm for basic set for electronic basin mixer wall-mounted	13594000

Measurements within scale drawings are in mm.
Technical specifications and units of measure are subject to change.

AXOR Uno Electronic basin mixer with temperature pre-adjustment with mains connection 230 V

Features of all variants

/ ComfortZone 100
/ projection: 148 mm
/ spray type: normal spray
/ maximum flow rate at 3 bar: 3,5 l/min
/ temperature adjustable via basic set
/ suitable for continous flow water heaters
/ infrared sensor technology
/ automatic environmental adjustment of infrared sensor
/ adjustable optical range of infrared sensor (2 settings)
/ 230 V / 50 Hz mains connection
/ running time: 10 s
/ hygiene rinse activatable (automatic water flow)
/ frequency of hygiene rinse: 24 h
/ flushing time hygiene rinse: 10 s
/ permanent rinse activatable (single water flow for 200 seconds, suitable for thermal disinfection)
/ cleaning mode: manual water stop for washbasin cleaning
/ connection dimension: DN15
/ dirt filters in the connection hoses
/ IP degree of protection: IPX5

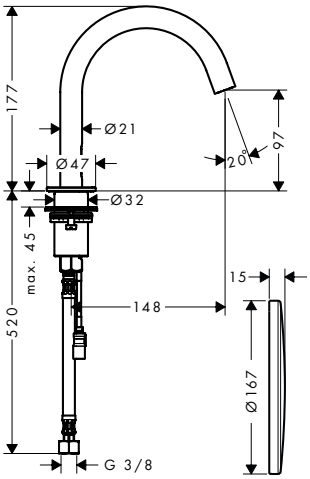

Special feature

Technologies

ComfortZone	Projection (mm)	Finish	Code no.
100	148	Chrome	38010000
		Matt Black	38010670
		Matt White	38010700
		Brushed Nickel	38010820
		AXOR FinishPlus*	38010XXX

This product is not available in the AXOR FinishPlus surfaces Red Gold and Black Chrome.

Required parts:	Code no.
AXOR Uno Basic set for electronic basin mixer	16182180

*AXOR FinishPlus: For further AXOR FinishPlus surfaces please see the AXOR FinishPlus overview on page 44.

SUEDE

AXOR Suite basins and bathtub
AXOR Massaud basins

AXOR WASH BASINS AND BATHTUBS

AXOR wash basins and bath tubs are extraordinary bathroom objects that enhance a bathroom design defined by an AXOR collection with very individual aesthetics.

AXOR wash basins and bathtubs

One of a kind for the bathroom

In addition to exclusive mixers, showers and accessories, AXOR also offers unconventional wash basins and bathtubs. They perfectly can be combined with mixers from various bathroom collections. AXOR wash basins and bathtubs for complete personalization of bathroom design: Especially when used specifically as individual design objects or to enhance a bathroom design defined by an AXOR collection.

Design: Philippe Starck, Jean-Marie Massaud

Characteristic design feature:

Different styles and high-quality materials give the bathtubs and wash basins an individualized design aesthetic, making them a bathroom highlight.

The designer's idea:

Bathroom objects with unique selling points: Creating a consistent design for furnishing an entire bathroom. Each wash basin and each bathtub is an eye-catcher on its own within an individualized bathroom design.

Special program highlights:

/ The AXOR Suite wash basin and bathtub combine metal and SolidSurface, representing imperishability and elegance

/ The organic shapes of the wash basins in the AXOR Massaud collection are inspired by nature. These products invite us to celebrate the moment and the water

→ Learn more about AXOR Wash basins and bathtubs: axor-design.com

Uniquely universal – matching your character

Through elegant design and specially finished elements, AXOR Suite basins and bathtub, designed by world-renowned creator Philippe Starck, bring harmony and a personal touch to any bathroom interior. Each piece is made with SolidSurface material for resistance and longevity, while smooth contours, small radii and 'soft' inner basins, devoid of lines or ridges, ensure a clean modern look with universal appeal. At the same time, specially finished elements – a shelf on the bathtub, a wrap-around surface on the wash basin sides – allow users to express their individuality.

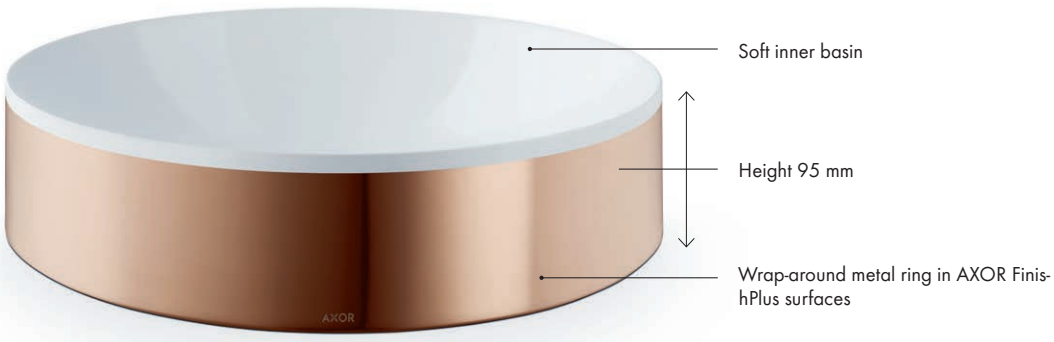

Rectangular or circular, the AXOR Suite basins and bathtub are timeless, universal, elegant forms, characterized by small radii, soft and smooth inner basins. Specially finished elements come in a choice of Matt Black, Chrome or any of the AXOR FinishPlus polished or brushed surfaces.

Aromatique Hand Wash

Strong statement in the bathroom

Its size alone makes the bathtub the centerpiece in most bathrooms. In the elegant AXOR Suite model, Philippe Starck has not only put emphasis on a timeless, universal design, but also on durable materials. The use of Solid-Surface, a durable, stain-resistant surface derived of natural materials and pure acrylic resin meet Starck's claim: "Designed to last forever." Non-porous and easy-to-clean, SolidSurface is ideal for environments that require the highest standards of hygiene.

The bathtub, circular at the ends and straight on the sides, is generously sized at 1900 x 830 mm. With AXOR Suite, one's favorite bath-time objects, from books to personal care items, find their place on an optional orderable shelf. With a wide range of possible surface finishes, these special-finish elements can be selected in coordination with all other AXOR products in the bathroom, ensuring a holistic design language throughout.

The bathtub is equipped with a waste set. To order the waste set in the matching AXOR FinishPlus surface please add the corresponding surface code number.

AXOR

A reference to nature

The design of the mixer collection is meticulously executed in the A XOR Massaud wash basins – as a harmonious connection of organic, avant-garde forms. This creates a natural aesthetic that meets all of the requirements for a modern bathroom. The A XOR Massaud wash basins and bathtub demonstrate yet another successful symbiosis among human beings, water, objects and space.

The AXOR Massaud wash basin: a unique, organic design object. The wash bowl is available as a countertop wash bowl in two sizes. Material: mineral-cast with durable gel coat surface.

AXOR Suite Basins & Bathtub Wash bowls

Features of all variants

/ consists of: wash bowl, design frame
/ material: SolidSurface
/ basin inner height: 80 mm
/ without tap hole
/ without overflow
/ CE conformed
/ without waste set
/ only combinable with non-closing waste set
/ installation type: built-on
/ overflow class: CL00
/ material frame: metal

300

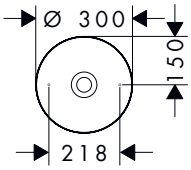

400

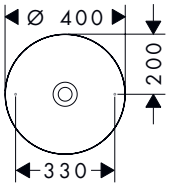

Overview variants

	Diameter (mm)	Finish	Code no.
	300	Chrome	42000000
		Brushed Black Chrome	42000340
		Matt Black	42000670
		Brushed Bronze	42000140
		AXOR FinishPlus*	42000XXX
	400	Chrome	42001000
		Brushed Black Chrome	42001340
		Matt Black	42001670
		Brushed Bronze	42001140
		AXOR FinishPlus*	42001XXX

Optional parts:		Finish	Code no.
	Design trap Flowstar S	Chrome	51305000
		Brushed Bronze	51305140
		Brushed Black Chrome	51305340
		Matt Black	51305670
		AXOR FinishPlus*	51305XXX
	Waste set non-closing for washbasins	Chrome	51301000
		Brushed Bronze	51301140
		Brushed Black Chrome	51301340
		Matt Black	51301670
		AXOR FinishPlus*	51301XXX

Measurements within scale drawings are in mm.
Technical specifications and units of measure are subject to change.

AXOR Suite Basins & Bathtub Wash bowls

Features of all variants

/ consists of: wash bowl, design frame
/ material: SolidSurface
/ basin inner height: 80 mm
/ without tap hole
/ without overflow
/ CE conformed
/ without waste set
/ only combinable with non-closing waste set
/ installation type: built-on
/ overflow class: CL00
/ material frame: metal

285/285

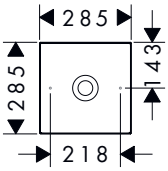

400/400

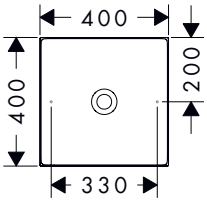

600/400

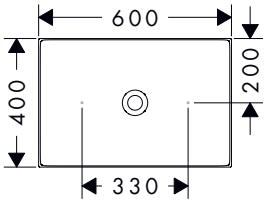

Overview variants

	Product dimensions (mm)	Finish	Code no.
	285/285	Chrome	42002000
		Brushed Black Chrome	42002340
		Matt Black	42002670
		Brushed Bronze	42002140
		AXOR FinishPlus*	42002XXX
	400/400	Chrome	42003000
		Matt Black	42003670
		Brushed Bronze	42003140
		Brushed Black Chrome	42003340
		AXOR FinishPlus*	42003XXX
	600/400	Chrome	42004000
		Matt Black	42004670
		Brushed Bronze	42004140
		Brushed Black Chrome	42004340
		AXOR FinishPlus*	42004XXX

Optional parts:		Finish	Code no.
	Waste set non-closing for washbasins	Chrome	51301000
		Brushed Bronze	51301140
		Brushed Black Chrome	51301340
		AXOR FinishPlus*	51301XXX
	Design trap Flowstar S	Chrome	51305000
		Brushed Bronze	51305140
		Brushed Black Chrome	51305340
		Matt Black	51305670
		AXOR FinishPlus*	51305XXX

*AXOR FinishPlus: For further AXOR FinishPlus surfaces please see the AXOR FinishPlus overview on page 44.

AXOR Suite Basins & Bathtub Bathtub 1900/850

Features

/ consists of: bathtub, push-open waste set
/ including siphon with overflow set
/ push open waste set in chosen finish included
/ free-standing bath tub
/ bath tub entry heigth: 631 mm
/ filling level approx.: 355 mm
/ weight with water (1 person 70 kg): approx. 440 kg
/ weight without water: 180 kg
/ material: SolidSurface
/ CE conformed
/ number of people: 2
/ with overflow
/ degree of gloss: matt
/ material thickness: 14 mm
/ length lying surface: 1685 mm
/ width lying surface: 627 mm
/ filling capacity: approx.190 l (1 person, 70 kg)

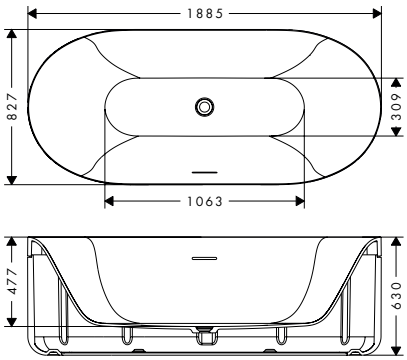

Finish	Code no.
Chrome	42005000
Matt Black	42005670
Brushed Bronze	42005140
Brushed Black Chrome	42005340
AXOR FinishPlus*	42005XXX

Optional parts:		Finish	Code no.
	AXOR Suite Basins & Bathtub Shelf	Chrome	42006000
		Matt Black	42006670
		Brushed Bronze	42006140
		Brushed Black Chrome	42006340
		AXOR FinishPlus*	42006XXX

AXOR Suite Basins & Bathtub Shelf

Features

/ screw fastening
/ material shelf: metal
/ with mounting material
/ concealed fastening
/ maximum load capacity: 20 kg

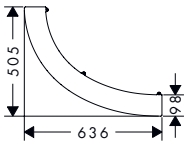

Finish	Code no.
Chrome	42006000
Matt Black	42006670
Brushed Bronze	42006140
Brushed Black Chrome	42006340
AXOR FinishPlus*	42006XXX

Required parts:		Finish	Code no.
	AXOR Suite Basins & Bathtub Bathtub 1900/850	Chrome	42005000
		Matt Black	42005670
		Brushed Bronze	42005140
		Brushed Black Chrome	42005340
		AXOR FinishPlus*	42005XXX

Measurements within scale drawings are in mm.
Technical specifications and units of measure are subject to change.

AXOR Massaud Wash bowl 570/450

Features

/ material: mineral cast with gelcoat
/ without tap hole
/ without overflow
/ only in conjunction with basin mixers without pull rod
/ installation type: built-on
/ overflow class: CL00

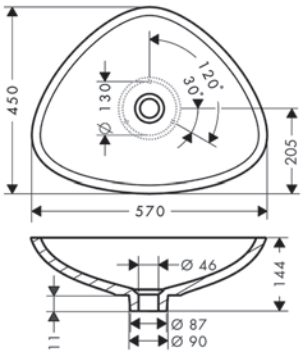

Finish	Code no.
White	42305000

Optional parts:		Finish	Code no.
	Waste set non-closing for washbasins	Chrome	51301000
		AXOR FinishPlus*	51301XXX

AXOR Massaud Wash bowl 800/450

Features

/ material: mineral cast with gelcoat
/ without tap hole
/ without overflow
/ without waste set
/ only in conjunction with basin mixers without pull rod
/ installation type: built-on
/ overflow class: CL00

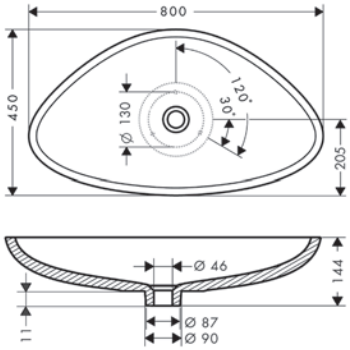

Finish	Code no.
White	42300000

Optional parts:		Finish	Code no.
	Waste set non-closing for washbasins	Chrome	51301000
		AXOR FinishPlus*	51301XXX

*AXOR FinishPlus: For further AXOR FinishPlus surfaces please see the AXOR FinishPlus overview on page 44.

AXOR Starck

AXOR Citterio

AXOR Citterio M

AXOR Uno

AXOR Montreux

AXOR Accessories for kitchen faucets

AXOR KITCHEN FAUCETS

Culinary Evolution

AXOR kitchen faucets combine striking beauty with intuitive technology, masterful design with precision engineering. Ensuring effortless ease of operation for all who appreciate the art of cooking, from amateur gastronomes to professional chefs de cuisine, they can also inspire culinary evolution. Opening new aesthetic vistas in the kitchen, the mixers are offered in up to different AXOR FinishPlus surfaces, from Stainless Steel-Optic to Polished Black Chrome, Brushed Nickel to Polished Red Gold.

Design: Philippe Starck, Antonio Citterio, PHOENIX

Characteristic design feature:

Minimalist, modern, purist or authentic-traditional designs for new aesthetic dimensions in the kitchen.

The designer's idea:

Form follows function: AXOR kitchen faucets combine outstanding design with exceptional ease of use and ergonomic comfort.

Special program highlights:

/ Variety of variants: Semi-Pro, pull-out spray, pull-out spout, swivel spout and wall version
/ Selected models available with Select technology
/ Swivel-ranges of 110°/150°/360°- depending on selected model
/ Different spray modes for easy dish-washing and fast pot-filling
/ sBox – expert hose guidance for ease and comfort

→ Learn more about AXOR kitchen faucets: axor-design.com

Avant-garde innovation

AXOR Citterio Select 230 2jet offers a multifunction pull-out spray for optimal freedom of movement. Switch between power and grace, between a strong spray for the efficient filling of pots and a soft shower spray for thorough washing of fruits and vegetables. Get the effortless convenience of Select technology at the touch of a button.

Single lever kitchen mixer Select 230 2jet with pull-out spray

Expert Hose Guidance for Ease and Comfort. The sBox contains an innovative hose guidance system, available with the AXOR Citterio Select kitchen faucet with multifunction pull-out spray. Housed in the base cabinet, the sBox ensures the smooth, quiet extraction and retraction of the hose. Inside the sBox, the hose weight safely guards and guides the hose from any obstacles and hindrances. It cannot be caught or damaged. The 52 cm box fits conveniently in any standard base cabinet.

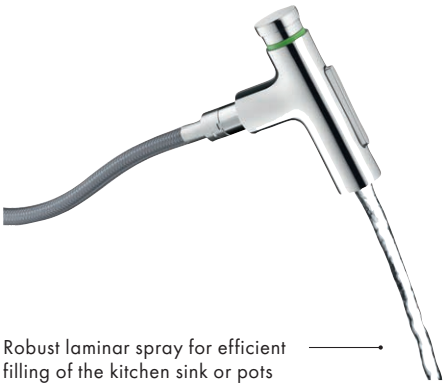

Modern elegance in the kitchen

The AXOR Citterio kitchen faucets combine astonishing beauty with exceptional ease of use. The precise angles of the operating lever offers sensuous, ergonomic comfort. The pull-out spray features dual jet-modes for strong cleaning and gentle washing. The towering Semi-Pro variant with all-round swivel-range is perfect for double-sink units and the modern cooking island.

AXOR Citterio M is the definition of discreet, urban chic. Separate levers offer maximum freedom of installation. Adjustable swivel-range ensures perfect orientation. Available in distinctive angular and parabolic variations, the mixer features a signature high spout that tapers flawlessly into an optional pull-out spray with dual settings, shower and direct.

Swivel range adjustable
in 3 steps to 110°, 150° or 360°

Pull-out shower with 2-jet
laminar/shower spray. The pull-out shower and the pull-out spout extend the radius of action at the sink.

Comfort Zone
for a perfect interaction between and sink and easy filling of larger pots and filling of larger pots and containers

Ergonomic handle
A long, flat handle makes operation particularly ergonomic.

A minimalist refreshment

Inspired by an icon of the ages, the archetypal hand pump, AXOR Starck evokes our historical connection with water. Elemental shapes reflect clarity of function. With signature pin handle on the left or the right, the smooth fluidity of the joystick mechanics ensures precise operation. Available as a stand-alone, with multifunction pull-out spray. The kitchen mixer by AXOR Starck. A marvel of minimalist elegance.

Individually adjustable swivel range
(110°/ 150°/ 360°)

Comfort Zone
for a perfect interaction between and sink and easy filling of larger pots and filling of larger pots and containers

Pin handle

Variable handle positioning (right/ left)
According to personal preferences, the handle can be installed on the right or left

Purity of form

AXOR Uno embodies the Purist ethos of simplicity, balance and self-evident function. Easily configured for a range of spaces, from wide open to confined, the standing mixer fully rotates on its axis. The wall mixer's telescopic function extends the spout up to 550 mm. Dual swivel range (110° and 150°) further enhances freedom of movement.

Handle mountableright or left

According to personal preferences, the handle can be installed on the right or left

Telescopic pull-out

A telescopic pull-out creates even more free space above the sink.

Individually adjustable swivel range

(110°/ 150°)

Authentic sophistication

The dignified grandeur of the Belle Époque spa. Well-being as a way of life. AXOR Montreux draws from this source, with design details that include slip-fit pipes and porcelain inlays. The mixer features an optional pull-out spray with dual settings. The Semi-Pro variant boasts a signature stainless steel coil and all-round swivel range.

Individually adjustable swivel range
(110° /150°)

Laminar spray/shower spray
Lockable shower jet, jet reset at the touch of a button

Comfort Zone
for a perfect interaction between the faucet and sink and easy filling of larger pots and containers

AXOR Starck Single lever kitchen mixer 300 with swivel spout

Features of all variants

/ ComfortZone 300
/ swivel range adjustable in 3 steps 110°, 150° or 360°
/ normal spray
/ connection dimension: DN15
/ maximum flow rate at 3 bar: 15 l/min
/ joystick ceramic cartridge
/ connection type: G ⅜ hose connections
/ integrated non-return valve
/ suitable for continuous flow water heaters

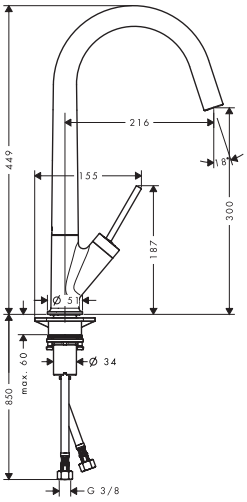

Technologies

Spray types

ComfortZone	Spray types	EcoSmart	Max. flow rate at 3 bar (l/min)	Finish	Code no.
300	normal spray	–	15	Chrome	10822000
				Stainless Steel Finish	10822800
				AXOR FinishPlus*	10822XXX

AXOR Starck Single lever kitchen mixer 270 with pull-out spray

Features of all variants

/ ComfortZone 270
/ swivel range adjustable in 2 steps to 110° or 150°
/ shower spray, laminar spray
/ lockable shower spray, spray returns through pressing spray diverter
/ MagFit magnetic shower support
/ quick connect hose
/ connection dimension: DN15
/ maximum flow rate at 3 bar: 9 l/min
/ joystick ceramic cartridge
/ connection type: G ⅜ hose connections
/ integrated non-return valve
/ suitable for continuous flow water heaters
/ extension length up to 50 cm

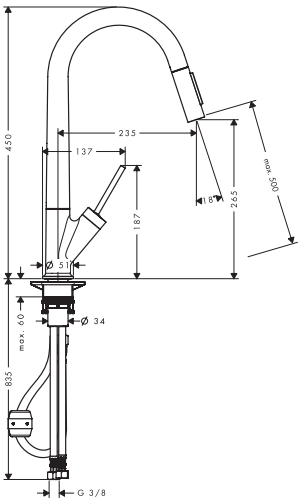

Technologies

Spray types

Installation

Certificates/declarations

ComfortZone	EcoSmart	Max. flow rate at 3 bar (l/min)	Finish	Code no.
270	–	9	Chrome	10821000
			Brushed Black Chrome	10821340
			Stainless Steel Finish	10821800
			AXOR FinishPlus*	10821XXX

This product is only available in the AXOR FinishPlus surface Polished Gold Optic via AXOR Signature.

Measurements within scale drawings are in mm.
Technical specifications and units of measure are subject to change.

AXOR Citterio Single lever kitchen mixers with pull-out spray

Features of all variants

/ ComfortZone 230
/ l-spout
/ swivel range adjustable in 2 steps to 110° or 150°
/ laminar spray, shower spray
/ lockable shower spray, spray returns through pressing spray diverter and spray returns automatically through handle closing
/ Select button for a comfortable start/stop of the water flow
/ MagFit magnetic shower support
/ connection dimension: DN15
/ ceramic cartridge
/ connection type: G ⅜ hose connections
/ temperature limitation adjustable
/ integrated non-return valve
/ suitable for continuous flow water heaters

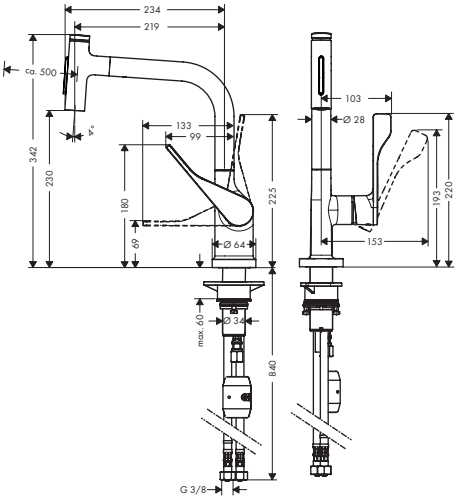

Technologies

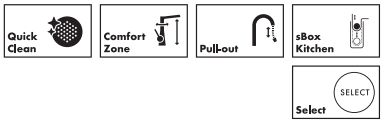

Spray types

Installation

Overview variants

ComfortZone	Hose retraction	Extension length (cm)	Max. flow rate at 3 bar (l/min)	Finish	Code no.
230	sBox	76 cm	7	Chrome	39862000
				Brushed Black Chrome	39862340
				Matt Black	39862670
				Stainless Steel Finish	39862800
				AXOR FinishPlus*	39862XXX
230	weight	50 cm	8	Chrome	39863000
				Brushed Black Chrome	39863340
				Matt Black	39863670
				Stainless Steel Finish	39863800
				AXOR FinishPlus*	39863XXX

AXOR Citterio Single lever kitchen mixer Select 230 with swivel spout

Features of all variants

/ ComfortZone 230
/ swivel range adjustable in 3 steps 110°, 150° or 360°
/ normal spray
/ Select button for a comfortable start/stop of the water flow
/ connection dimension: DN15
/ maximum flow rate at 3 bar: 9 l/min
/ ceramic cartridge
/ connection type: G ⅜ hose connections
/ temperature limitation adjustable
/ integrated non-return valve
/ suitable for continuous flow water heaters

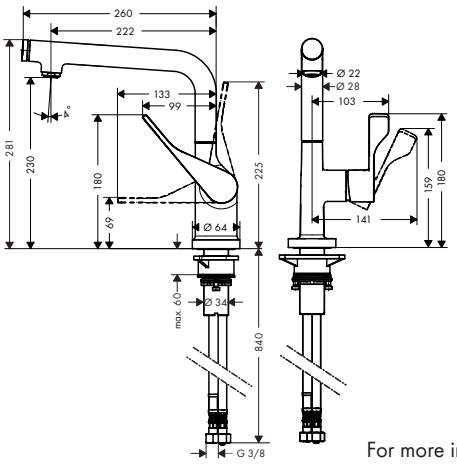

Technologies

Spray types

For more information about this product, please see the next page.

*AXOR FinishPlus: For further AXOR FinishPlus surfaces please see the AXOR FinishPlus overview on page 44.

AXOR Citterio Single lever kitchen mixer Select 230 with swivel spout

ComfortZone	Max. flow rate at 3 bar (l/min)	Finish	Code no.
230	9	Chrome	39860000
		Brushed Black Chrome	39860340
		Stainless Steel Finish	39860800
		AXOR FinishPlus*	39860XXX

AXOR Citterio Single lever kitchen mixer Select 230 with pull-out spout

Features of all variants

/ ComfortZone 230
/ swivel range adjustable in 2 steps to 110° or 150°
/ normal spray
/ Select button for a comfortable start/stop of the water flow
/ MagFit magnetic shower support
/ connection dimension: DN15
/ maximum flow rate at 3 bar: 9 l/min
/ ceramic cartridge
/ connection type: G ⅜ hose connections
/ temperature limitation adjustable
/ integrated non-return valve
/ suitable for continuous flow water heaters
/ extension length up to 50 cm

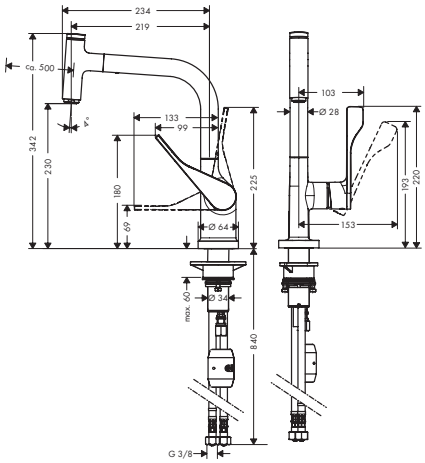

Technologies

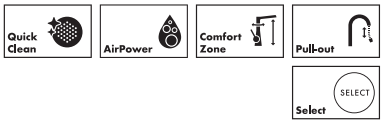

Spray types

Installation

ComfortZone	EcoSmart	Max. flow rate at 3 bar (l/min)	Finish	Code no.
230	–	9	Chrome	39861000
			Brushed Black Chrome	39861340
			Matt Black	39861670
			Stainless Steel Finish	39861800
			AXOR FinishPlus*	39861XXX

AXOR Citterio Single lever kitchen mixer 260 with swivel spout

Features of all variants

/ ComfortZone 260
/ swivel range adjustable in 3 steps 110°, 150° or 360°
/ normal spray
/ connection dimension: DN15
/ maximum flow rate at 3 bar: 12 l/min
/ ceramic cartridge
/ connection type: G ⅜ hose connections
/ temperature limitation adjustable
/ integrated non-return valve
/ suitable for continuous flow water heaters

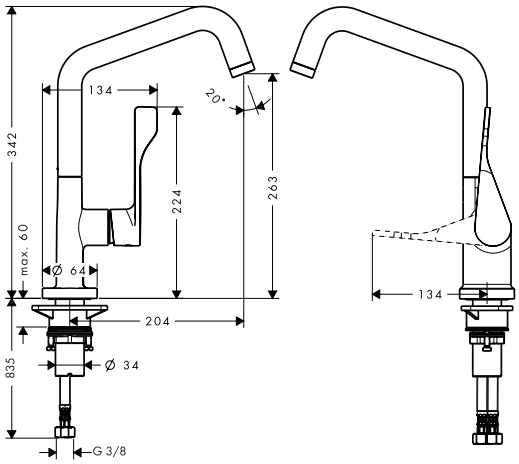

Technologies

Spray types

Measurements within scale drawings are in mm.
Technical specifications and units of measure are subject to change.

AXOR Citterio Single lever kitchen mixer 260 with swivel spout

ComfortZone	Spray types	EcoSmart	Max. flow rate at 3 bar (l/min)	Finish	Code no.
260	normal spray	–	12	Chrome	39850000
				Brushed Black Chrome	39850340
				Stainless Steel Finish	39850800
				AXOR FinishPlus*	39850XXX

AXOR Citterio Single lever kitchen mixers with pull-out spray

Features of all variants

/ ComfortZone 250
/ swivel range adjustable in 2 steps to 110° or 150°
/ shower spray, laminar spray
/ lockable shower spray, spray returns through pressing spray diverter
/ MagFit magnetic shower support
/ quick connect hose
/ connection dimension: DN15
/ ceramic cartridge
/ connection type: G ⅜ hose connections
/ temperature limitation adjustable
/ integrated non-return valve
/ suitable for continuous flow water heaters
/ extension length up to 50 cm

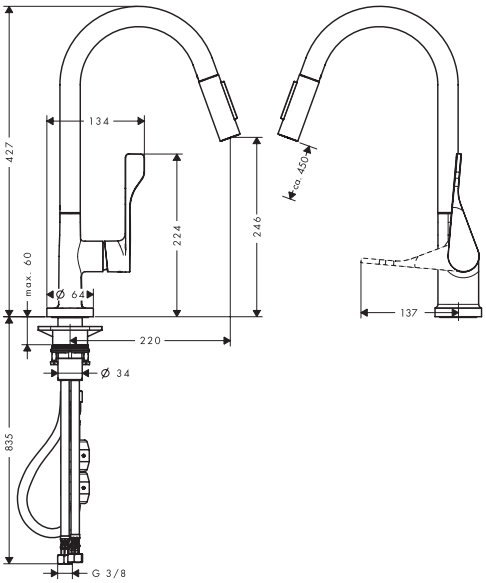

Special feature

EcoSmart

Technologies

Quick Clean | Comfort Zone | Pull-out

Spray types

Laminar Spray | Shower Spray

Installation

Mag Fit

Overview variants

ComfortZone	EcoSmart	Max. flow rate at 3 bar (l/min)	Finish	Code no.
250	–	9	Chrome	39835000
			Brushed Black Chrome	39835340
			Matt Black	39835670
			Stainless Steel Finish	39835800
			AXOR FinishPlus*	39835XXX
250	■	4.8	Chrome	39832000
			Matt Black	39832670
			Stainless Steel Finish	39832800
			AXOR FinishPlus*	39832XXX

*AXOR FinishPlus: For further AXOR FinishPlus surfaces please see the AXOR FinishPlus overview on page 44.

AXOR Citterio Single lever kitchen mixer 230 Semi-Pro

Features of all variants

/ ComfortZone 230
/ swivel range 360°
/ laminar spray, shower spray
/ lockable shower spray, spray returns through pressing spray diverter
/ connection dimension: DN15
/ maximum flow rate at 3 bar: 9 l/min
/ ceramic cartridge
/ connection type: G ⅜ hose connections
/ temperature limitation adjustable
/ integrated non-return valve
/ suitable for continuous flow water heaters

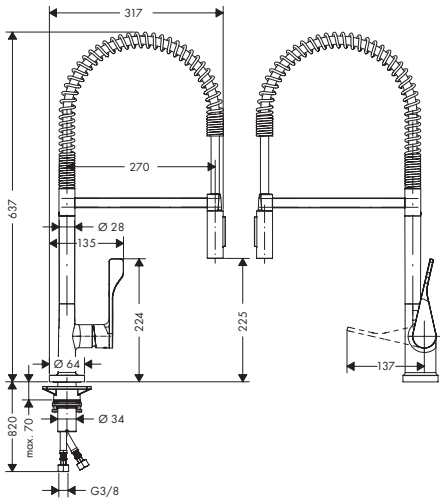

Technologies

Spray types

Certificates/declarations

ComfortZone	Spray types	EcoSmart	Max. flow rate at 3 bar (l/min)	Finish	Code no.
230	laminar spray, shower spray	–	9	Chrome	39840000
				Stainless Steel Finish	39840800
				AXOR FinishPlus*	39840XXX

AXOR Citterio M 2-hole single lever kitchen mixer 240 with swivel spout

Features of all variants

/ ComfortZone 240
/ swivel range adjustable in 3 steps 110°, 150° or 360°
/ normal spray
/ quick connect hose
/ connection dimension: DN15
/ maximum flow rate at 3 bar: 11 l/min
/ ceramic cartridge
/ connection type: G ⅜ hose connections
/ temperature limitation adjustable
/ integrated non-return valve
/ suitable for continuous flow water heaters

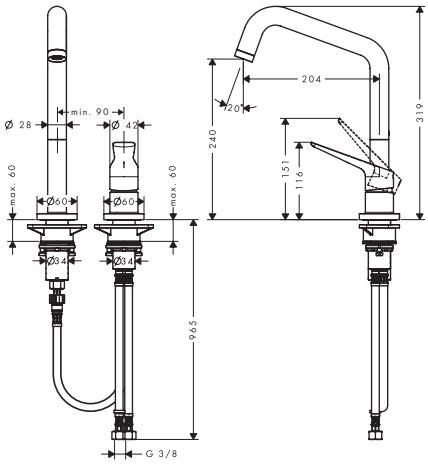

Technologies

Spray types

ComfortZone	EcoSmart	Max. flow rate at 3 bar (l/min)	Finish	Code no.
240	–	11	Chrome	34820000
			Stainless Steel Finish	34820800
			AXOR FinishPlus*	34820XXX

Measurements within scale drawings are in mm.
Technical specifications and units of measure are subject to change.

AXOR Citterio M 2-hole single lever kitchen mixer 220 with pull-out spray

Features of all variants

/ ComfortZone 220
/ swivel range adjustable in 2 steps to 110° or 150°
/ shower spray, laminar spray
/ lockable shower spray, spray returns through pressing spray diverter
/ MagFit magnetic shower support
/ quick connect hose
/ connection dimension: DN15
/ maximum flow rate at 3 bar: 9 l/min
/ ceramic cartridge
/ connection type: G ⅜ hose connections
/ temperature limitation adjustable
/ integrated non-return valve
/ suitable for continuous flow water heaters
/ extension length up to 50 cm

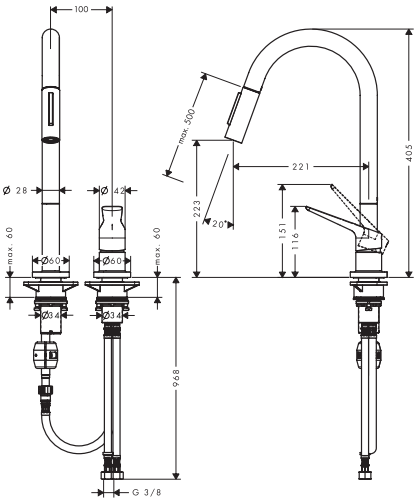

Technologies

Spray types

Installation

ComfortZone	EcoSmart	Max. flow rate at 3 bar (l/min)	Finish	Code no.
220	–	9	Chrome	34822000
			Stainless Steel Finish	34822800
			AXOR FinishPlus*	34822XXX

AXOR Uno Single lever kitchen mixer for concealed installation wall-mounted

Features of all variants

/ handle can be positioned on the right or left, depending on the basic set installation
/ swivel range adjustable in 2 steps to 110° or 150°
/ with telescopic function (330 - 500 mm)
/ laminar spray
/ maximum flow rate at 3 bar: 9 l/min
/ joystick ceramic cartridge
/ connection type: basic set or base unit required
/ integrated non-return valve
/ suitable for continuous flow water heaters

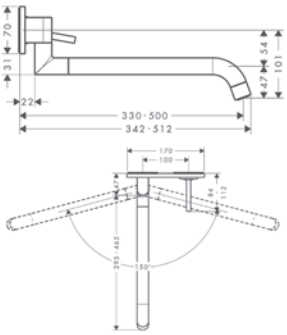

Spray types

EcoSmart	Max. flow rate at 3 bar (l/min)	Finish	Code no.
–	9	Chrome	38815000
		Brushed Black Chrome	38815340
		Stainless Steel Finish	38815800
		AXOR FinishPlus*	38815XXX

Required parts:		Code no.
	Basic set for single lever basin mixer for concealed installation wall-mounted	13623180

Optional parts:		Code no.
	Extension set 25 mm for single lever basin mixer wall-mounted	13586000

*AXOR FinishPlus: For further AXOR FinishPlus surfaces please see the AXOR FinishPlus overview on page 44.

AXOR Montreux Single lever kitchen mixer 260 with swivel spout

Features of all variants

/ ComfortZone 260
/ swivel range adjustable in 3 steps 110°, 150° or 360°
/ laminar spray
/ connection dimension: DN15
/ maximum flow rate at 3 bar: 11 l/min
/ ceramic cartridge
/ connection type: G ⅜ hose connections
/ temperature limitation adjustable
/ suitable for continuous flow water heaters

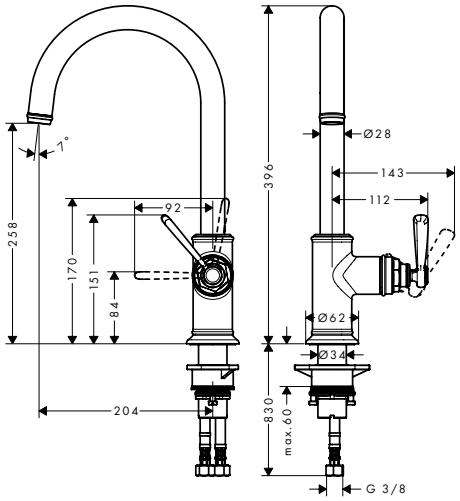

Technologies

Comfort Zone

Spray types

Laminar Spray

ComfortZone	Max. flow rate at 3 bar (l/min)	Finish	Code no.
260	11	Chrome	16580000
		Brushed Black Chrome	16580340
		Stainless Steel Finish	16580800
		AXOR FinishPlus*	16580XXX

Optional parts:		Finish	Code no.
	AXOR Montreux Liquid soap dispenser/ washing-up liquid dispenser	Chrome	42018000
		Brushed Black Chrome	42018340
		Stainless Steel Finish	42018800

AXOR Montreux Single lever kitchen mixer 180 with pull-out spray

Features of all variants

/ ComfortZone 180
/ swivel range adjustable in 2 steps to 110° or 150°
/ shower spray, laminar spray
/ lockable shower spray, spray returns through pressing spray diverter
/ MagFit magnetic shower support
/ quick connect hose
/ connection dimension: DN15
/ maximum flow rate at 3 bar: 9 l/min
/ ceramic cartridge
/ connection type: G ⅜ hose connections
/ temperature limitation adjustable
/ integrated non-return valve
/ suitable for continuous flow water heaters
/ extension length up to 50 cm

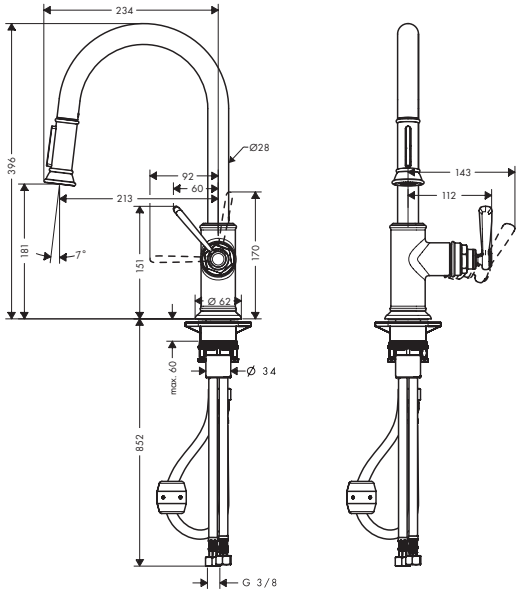

Technologies

Quick Clean | Comfort Zone | Pull-out

Spray types

Laminar Spray | Shower Spray

Installation

Mag Fit

Measurements within scale drawings are in mm.
Technical specifications and units of measure are subject to change.

AXOR Montreux Single lever kitchen mixer 180 with pull-out spray

ComfortZone	Extension length (cm)	Max. flow rate at 3 bar (l/min)	Finish	Code no.
180	50 cm	9	Chrome	16581000
			Brushed Black Chrome	16581340
			Stainless Steel Finish	16581800
			AXOR FinishPlus*	16581XXX

Optional parts:	Finish	Code no.
AXOR Montreux Liquid soap dispenser/ washing-up liquid dispenser	Chrome	42018000
	Brushed Black Chrome	42018340
	Stainless Steel Finish	42018800

AXOR Montreux Single lever kitchen mixer 210 Semi-Pro

Features of all variants

/ ComfortZone 210
/ swivel range 360°
/ shower spray, laminar spray
/ lockable shower spray, spray returns through pressing spray diverter
/ connection dimension: DN15
/ maximum flow rate at 3 bar: 11 l/min
/ ceramic cartridge
/ connection type: G ⅜ hose connections
/ temperature limitation adjustable
/ integrated non-return valve
/ suitable for continuous flow water heaters

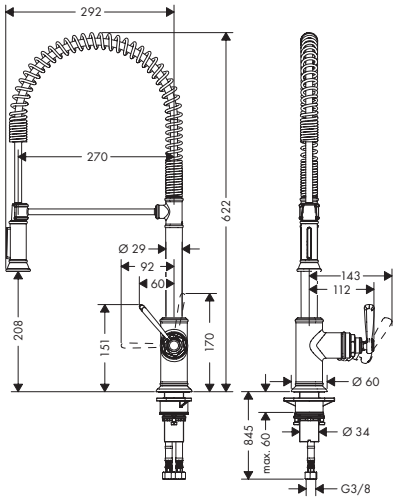

Technologies

Spray types

ComfortZone	EcoSmart	Max. flow rate at 3 bar (l/min)	Finish	Code no.
210	–	11	Chrome	16582000
			Stainless Steel Finish	16582800
			AXOR FinishPlus*	16582XXX

Optional parts:	Finish	Code no.
AXOR Montreux Liquid soap dispenser/ washing-up liquid dispenser	Chrome	42018000
	Stainless Steel Finish	42018800

*AXOR FinishPlus: For further AXOR FinishPlus surfaces please see the AXOR FinishPlus overview on page 44.

AXOR Montreux Liquid soap dispenser/ washing-up liquid dispenser

Features

/ suitable for matched design to selected kitchen mixers
/ projection 91 mm
/ material: metal
/ non-corroding outlet pipe
/ filling capacity 500 ml
/ dosage 2 ml
/ easy to fill up from the top
/ for installation in worktops up to 55 mm
/ easy and save installation without tools needed
/ mounting hole with 28 mm diameter needed

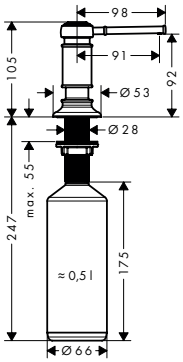

Finish	Code no.
Chrome	42018000
Polished Black Chrome	42018330
Brushed Black Chrome	42018340
Stainless Steel Finish	42018800

AXOR Uno Liquid soap dispenser/ washing-up liquid dispenser

Features

/ suitable for matched design to selected kitchen mixers
/ projection 91 mm
/ material: metal
/ non-corroding outlet pipe
/ filling capacity 500 ml
/ dosage 2 ml
/ easy to fill up from the top
/ for installation in worktops up to 55 mm
/ easy and save installation without tools needed
/ mounting hole with 28 mm diameter needed

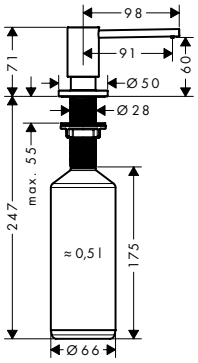

Finish	Code no.
Chrome	42818000
Polished Black Chrome	42818330
Brushed Black Chrome	42818340
Matt Black	42818670
Stainless Steel Finish	42818800

Kitchen device shut-off valve

Features

/ for counter surfaces up to 47 mm thick
/ connection dimension entry: G ½
/ connection dimension outlet: G ¾
/ device connection DN20
/ non-return valve

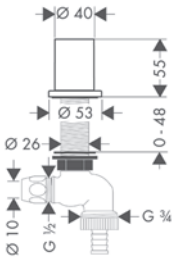

Finish	Code no.
Chrome	10823000
Stainless Steel Finish	10823800
AXOR FinishPlus*	10823XXX

Measurements within scale drawings are in mm.
Technical specifications and units of measure are subject to change.

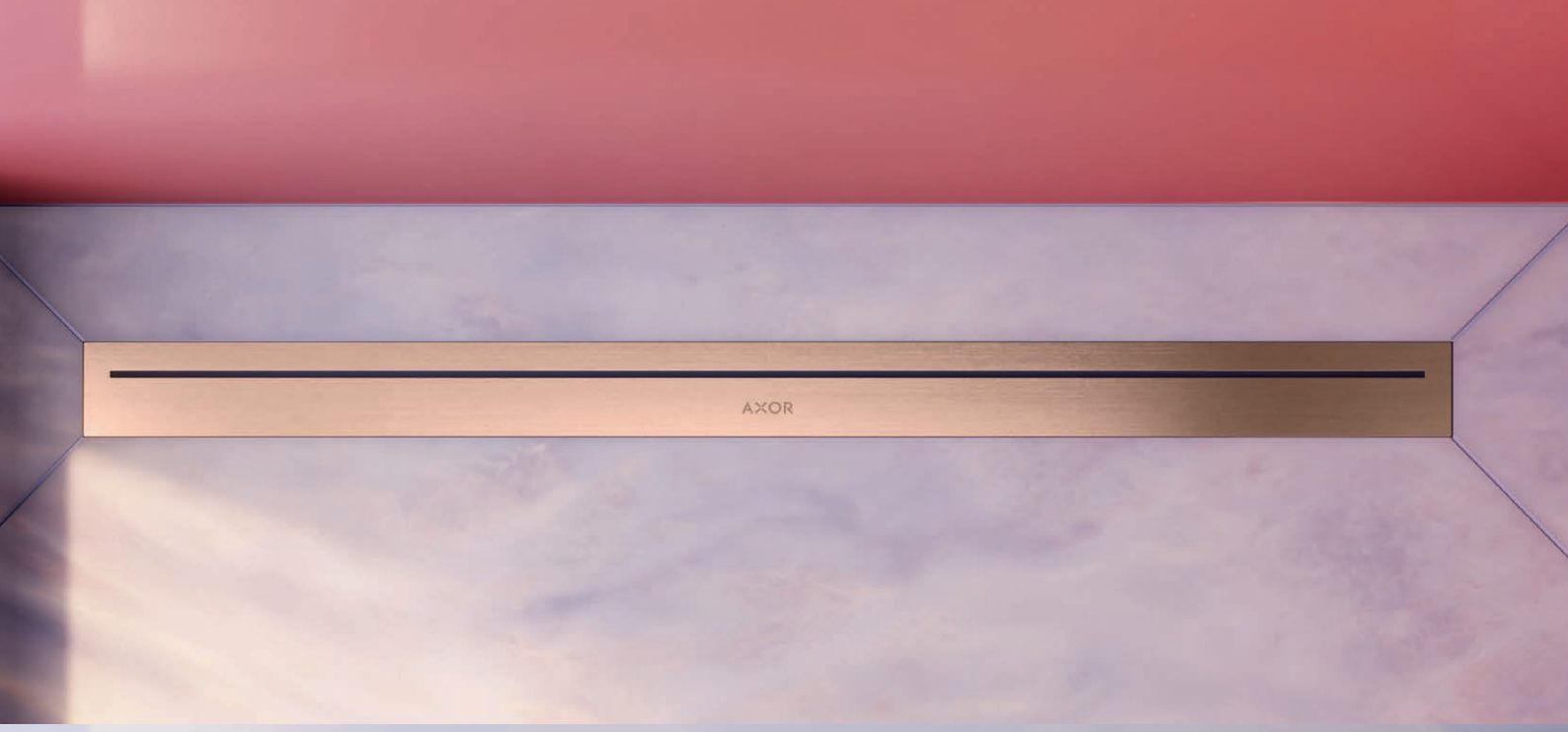
AXOR

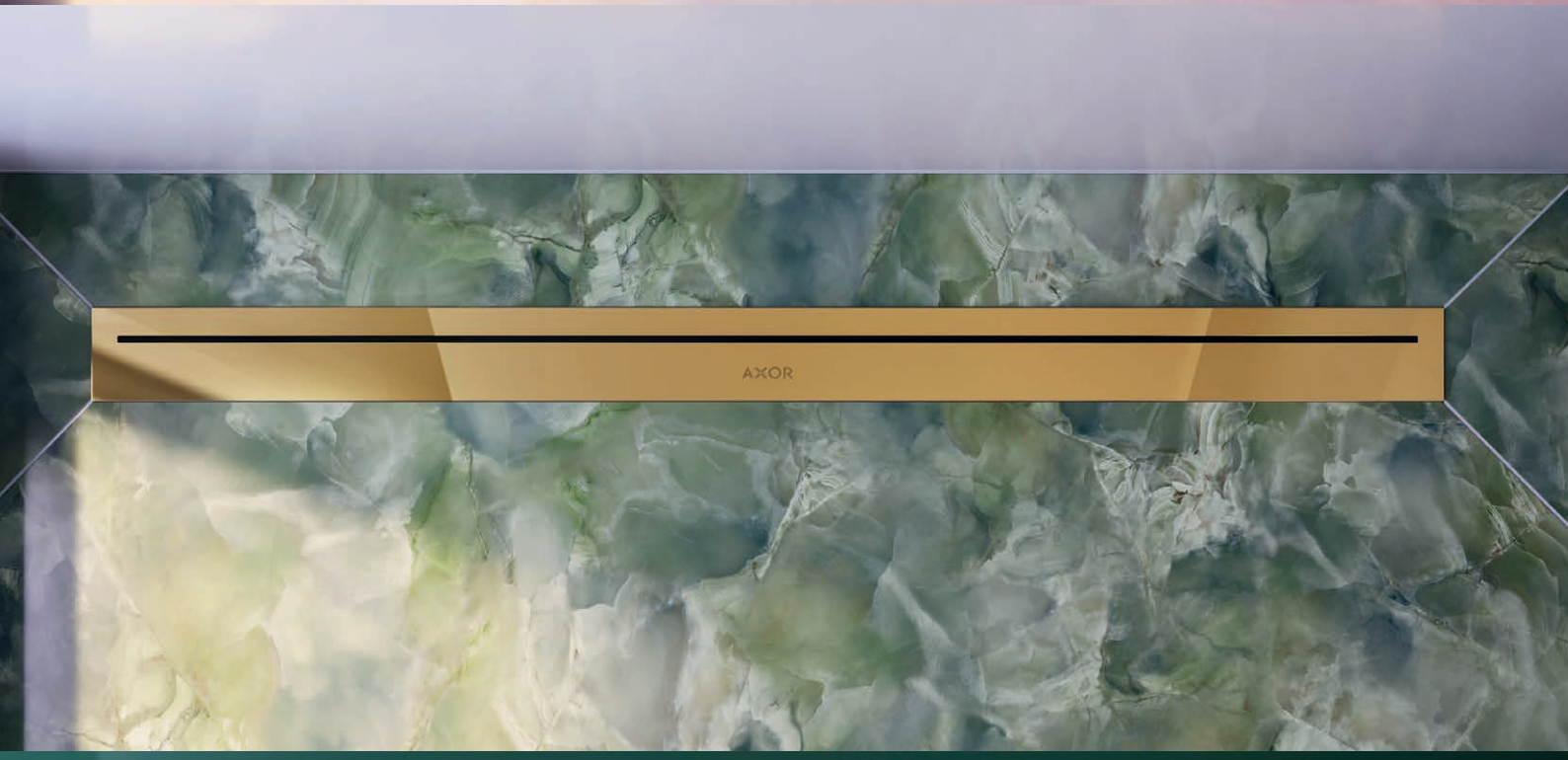
AXOR

AXOR

Powerful.
Reliable.
Integral.

AXOR Drain, wastes and overflows

AXOR's commitment to quality extends beyond its flawless design objects for the shower, bathtub and wash basin. Hidden but essential, AXOR waste systems employ sophisticated technology to ensure rapid, reliable drainage. Leak-tight, durable, easy to install and clean, these waste sets, fillers and overflow sets are designed to support and complement all AXOR products, collections and bathroom solutions.

Whether wash basin, bathtub or shower: AXOR waste systems use the latest technologies, stand for high quality, reliability and efficient water drainage. Sophisticated and suitable for all AXOR products and collections, AXOR waste and overflow systems as well as bath spouts are discreetly installed.

Special program highlights:

/ Minimalist, generic design for combination with all AXOR collections and programs.

/ AXOR Drain: no visible silicone joints, free-in-floor or wall-mounted versions available

/ All AXOR waste and overflow products are available in AXOR FinishPlus surfaces for the perfect color match.

→ Learn more about AXOR Drain, wastes and overflows: axor-design.com

Individuality to the detail.

AXOR Drain elevate the shower drain to an object of design that completes the look of any AXOR bathroom. Available in the same rich range of AXOR FinishPlus colors and surfaces as the AXOR collections and programs, AXOR Drain makes an individual statement grounded in excellent function. The first design in the program offers a sleek and seamless aesthetic, without visible silicone joints, harmonizing with different shower floor surfaces–from marble to porcelain, travertine to slate. Thanks to newly acquired innovative technology and outstanding AXOR quality, the drain is easy to install, require minimum cleaning and offer uncomplicated access to one's choice of Siphon or Dryphon draining mechanism.

Free in floor version

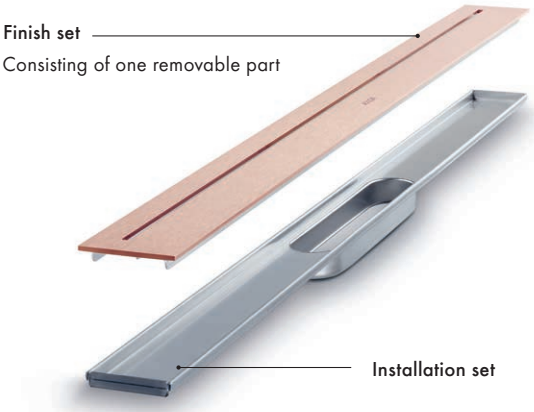

The new AXOR Drain features a long, minimalist exposed rectangular finish set, available in all AXOR FinishPlus PVD surfaces as well as classic Chrome and powder coated Matt Black and Matt White.

Wall version

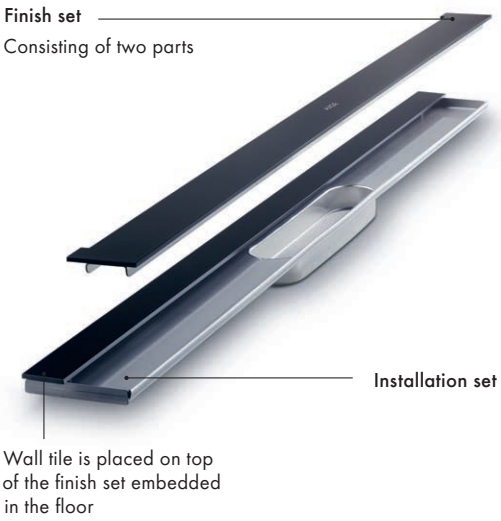

AXOR

Finish sets shower drains, free in the floor

Features of all variants

/ consists of: design grate, installation set, Dryphon
/ mounting type: free in the floor
/ easy to clean surface
/ installation set height adjustable by 7-18 mm tile thickness
/ tile thickness: up to 18 mm
/ suitable for any type of tile
/ up to 53 l/min drainage capacity
/ where to use: new construction, renovation
/ grate removal tool allows easy removal of the finish set
/ type of odour seal: mechanical
/ Dryphon enables waterless siphon system
/ no visible silicone joint
/ with integrated slope
/ grate material: Stainless Steel 304 (1.4301)
/ suitable for primary drainage

700 - 1200

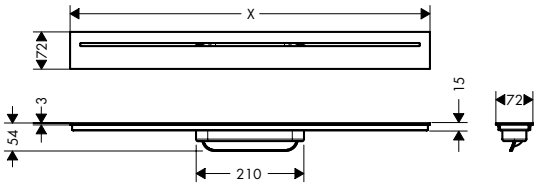

Technologies

Installation

Overview variants

Length (mm)	Finish	Code no.
700	Brushed Stainless Steel	42520800
	Chrome	42520000
	Matt Black	42520670
	Matt White	42520700
	Brushed Bronze	42520140
	Brushed Black Chrome	42520340
	Polished Gold Optic	42520990
	AXOR FinishPlus*	42520XXX
800	Brushed Stainless Steel	42521800
	Chrome	42521000
	Matt Black	42521670
	Matt White	42521700
	Brushed Bronze	42521140
	Brushed Black Chrome	42521340
	Polished Gold Optic	42521990
	AXOR FinishPlus*	42521XXX
900	Brushed Stainless Steel	42522800
	Chrome	42522000
	Matt Black	42522670
	Matt White	42522700
	Brushed Bronze	42522140
	Brushed Black Chrome	42522340
	Polished Gold Optic	42522990
	AXOR FinishPlus*	42522XXX

Measurements within scale drawings are in mm.
Technical specifications and units of measure are subject to change.

Finish sets shower drains, free in the floor

Overview variants

Length (mm)	Finish	Code no.
1000	Brushed Stainless Steel	42523800
	Chrome	42523000
	Matt Black	42523670
	Matt White	42523700
	Brushed Bronze	42523140
	Brushed Black Chrome	42523340
	Polished Gold Optic	42523990
	AXOR FinishPlus*	42523XXX
1200	Brushed Stainless Steel	42524800
	Chrome	42524000
	Matt Black	42524670
	Matt White	42524700
	Brushed Bronze	42524140
	Brushed Black Chrome	42524340
	Polished Gold Optic	42524990
	AXOR FinishPlus*	42524XXX

Required parts (choose one):		Code no.
	AXOR uBox universal Base set for finish sets for standard installation	01005180
	AXOR uBox universal Base set for finish sets for flat installation	01006180
	AXOR uBox universal Base set for finish sets for vertical installation	01007180

Optional parts:		Code no.
	Secondary drainage ring	94802000

*AXOR FinishPlus: For further AXOR FinishPlus surfaces please see the AXOR FinishPlus overview on page 44.

Finish sets shower drains for wall mounting

Features of all variants

/ consists of: design grate, installation set, Dryphon
/ mounting type: wall-mounted
/ easy to clean surface
/ installation set height adjustable by 7-18 mm tile thickness
/ tile thickness: up to 18 mm
/ suitable for any type of tile
/ up to 55 l/min drainage capacity
/ where to use: new construction, renovation
/ grate removal tool allows easy removal of the finish set
/ type of odour seal: mechanical
/ Dryphon enables waterless siphon system
/ no visible silicone joint
/ with integrated slope
/ grate material: Stainless Steel 304 (1.4301)
/ suitable for primary drainage

700 - 1200

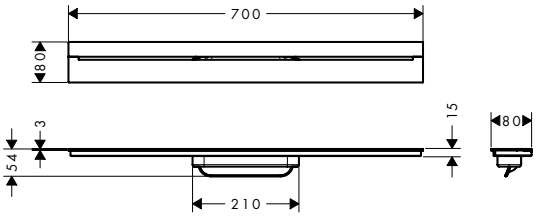

Technologies

Installation

Overview variants

Length (mm)	Finish	Code no.
700	Brushed Stainless Steel	42525800
	Chrome	42525000
	Matt Black	42525670
	Matt White	42525700
	Brushed Bronze	42525140
	Brushed Black Chrome	42525340
	Polished Gold Optic	42525990
	AXOR FinishPlus*	42525XXX
800	Brushed Stainless Steel	42526800
	Chrome	42526000
	Matt Black	42526670
	Matt White	42526700
	Brushed Bronze	42526140
	Brushed Black Chrome	42526340
	Polished Gold Optic	42526990
	AXOR FinishPlus*	42526XXX
900	Brushed Stainless Steel	42527800
	Chrome	42527000
	Matt Black	42527670
	Matt White	42527700
	Brushed Bronze	42527140
	Brushed Black Chrome	42527340
	Polished Gold Optic	42527990
	AXOR FinishPlus*	42527XXX

Measurements within scale drawings are in mm.
Technical specifications and units of measure are subject to change.

Finish sets shower drains for wall mounting

Overview variants

Length (mm)	Finish	Code no.
1000	Brushed Stainless Steel	42528800
	Chrome	42528000
	Matt Black	42528670
	Matt White	42528700
	Brushed Bronze	42528140
	Brushed Black Chrome	42528340
	Polished Gold Optic	42528990
	AXOR FinishPlus*	42528XXX
1200	Brushed Stainless Steel	42529800
	Chrome	42529000
	Matt Black	42529670
	Matt White	42529700
	Brushed Bronze	42529140
	Brushed Black Chrome	42529340
	Polished Gold Optic	42529990
	AXOR FinishPlus*	42529XXX

Required parts (choose one):		Code no.
	AXOR uBox universal Base set for finish sets for standard installation	01005180
	AXOR uBox universal Base set for finish sets for flat installation	01006180
	AXOR uBox universal Base set for finish sets for vertical installation	01007180

Optional parts:		Code no.
	Secondary drainage ring	94802000

*AXOR FinishPlus: For further AXOR FinishPlus surfaces please see the AXOR FinishPlus overview on page 44.

AXOR Staro Complete set waste set for shower tray

Features

/ consists of: finish set, basic set, odour trap
/ suitable for shower trays with Ø 90 mm waste outlet
/ nominal diameter connection: DN 50
/ screw connection M5x30
/ clamp connection
/ rotatable connection
/ waste pipe Ø 50 mm, by shortening also 40 mm possible
/ type of odour seal: fluid
/ drainage capacity 57 l/min
/ installation height: 80 mm
/ removable and cleanable water seal
/ water seal height: 50 mm
/ material siphon: Polypropylene (PP)
/ material of drain plug: Polypropylene (PP), ABS
/ easy to clean surface

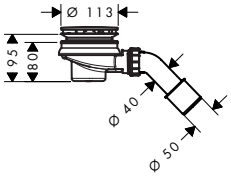

Technologies

Quick Clean

Finish	Available from	Code no.
Chrome	Q2/2026	42542000
Brushed Bronze	Q2/2026	42542140
Brushed Black Chrome	Q2/2026	42542340
Matt Black	Q2/2026	42542670
Matt White	Q2/2026	42542700
AXOR FinishPlus*		42542XXX

AXOR Exafill Complete set bath filler, waste and overflow set for bathtub

Features

/ consists of: finish set overflow with bath filler, basic set, waste set, odour trap
/ suitable for bathtubs made of cast iron, steel and plastic, to fit to both standard and extra-large tubs, bathtubs with waste outlet diameter 52 mm
/ water supply via the overflow
/ adjustable water inlet with different spray types
/ easy cleaning with access for plumber's snake
/ connection inlet mixed water: external thread
/ rotatable siphon housing
/ clamp connection
/ connection dimension entry: G ½
/ rotatable connection bent, diameter: 40/50 mm
/ double-sided seals on outlet and overflow
/ flat version: only 46 mm is needed behind bathtub
/ easy waste and overflow installation with included tool
/ shortenable and flexible overflow hose
/ pipe outer diameter drain pipe: 50 mm
/ water seal height: 50 mm
/ drainage capacity accumulation height 300 mm: 64 l/min
/ overflow capacity accumulation height 60 mm above centre of overflow hole: 36 l/min
/ material waste set: Polypropylene (PP), ABS
/ material overflow and filler: ABS, Polypropylene (PP)
/ flow rate class: O
/ noise class: I

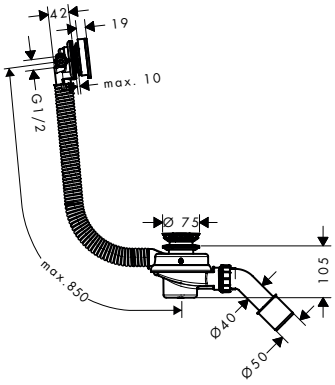

Finish	Available from	Code no.
Chrome	Q2/2026	42540000
Brushed Bronze	Q2/2026	42540140
Brushed Black Chrome	Q2/2026	42540340
Matt Black	Q2/2026	42540670
Matt White	Q2/2026	42540700
AXOR FinishPlus*		42540XXX

Measurements within scale drawings are in mm.
Technical specifications and units of measure are subject to change.

AXOR Flexaplus Complete set waste and overflow set for bathtub

Features

/ consists of: basic set, finish set, odour trap
/ suitable for bathtubs made of cast iron, steel and plastic, to fit to both standard and extra-large tubs, bathtubs with waste outlet diameter 52 mm
/ easy waste and overflow installation with included tool
/ rotatable connection bent, diameter: 40/50 mm
/ double-sided seals on outlet and overflow
/ flat version: only 46 mm is needed behind bathtub
/ shortenable and flexible overflow hose
/ rotatable siphon housing
/ easy cleaning with access for plumber's snake
/ connection siphon drain plug: clamp connection
/ pipe outer diameter drain pipe: 50 mm
/ drainage capacity accumulation height 300 mm: 64 l/min
/ overflow capacity accumulation height 60 mm above centre of overflow hole: 36 l/min
/ water seal height: 50 mm
/ material waste set: Polypropylene (PP), ABS
/ material overflow: Polypropylene (PP), ABS

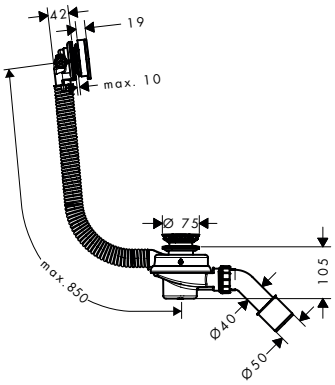

Finish	Available from	Code no.
Chrome	Q2/2026	42541000
Brushed Bronze	Q2/2026	42541140
Brushed Black Chrome	Q2/2026	42541340
Matt Black	Q2/2026	42541670
Matt White	Q2/2026	42541700
AXOR FinishPlus*		42541XXX

Flexible connection tube 800 mm

Features

/ length 800 mm
/ version: 90° angle

	Code no.
	58308000

*AXOR FinishPlus: For further AXOR FinishPlus surfaces please see the AXOR FinishPlus overview on page 44.

Finish sets

Features of all variants

/ consists of: hose box, shower hose, escutcheon
/ suitable for rim or tile mounted installation
/ 1 function
/ sBox for quiet, smooth and protected hose guidance
/ connection dimension: DN15
/ no additional maintenance opening required
/ bath rim width at least 80 mm
/ clamping range: 0 – 30 mm
/ maximum pull-out length of hand shower: 1,45 m
/ removable for service at any time
/ protected against backflow, according to DIN EN 1717
/ maximum flow rate at 3 bar: 9,5 l/min

square

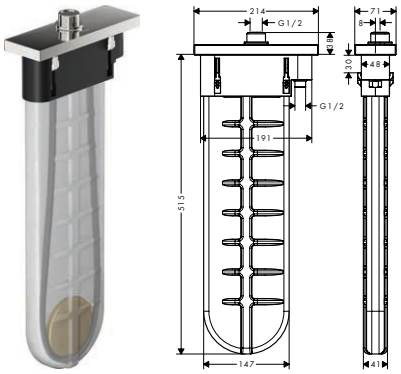

oval

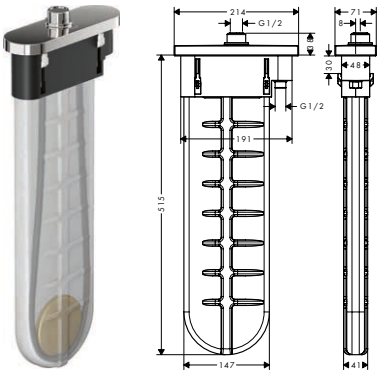

softsquare

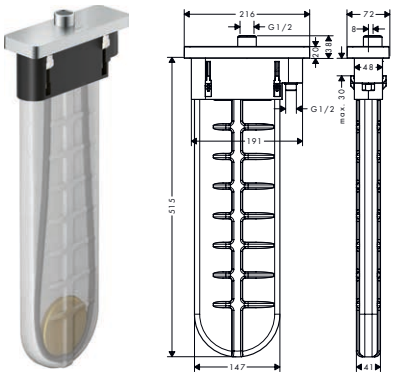

Overview variants

Shape	Finish	Code no.
square	Chrome	28012000
	AXOR FinishPlus*	28012XXX
oval	Chrome	28022000
	AXOR FinishPlus*	28022XXX
softsquare	Chrome	28017000
	Brushed Bronze	28017140
	Brushed Black Chrome	28017340
	Matt Black	28017670
	Brushed Nickel	28017820
	Polished Gold Optic	28017990
	AXOR FinishPlus*	28017XXX

Required parts:		Code no.
	sBox Rim and tile mounted bath basic set	15490180

Optional parts:		Code no.
	sBox Mounting angle set for installation plate for tile mounted installation	28011000
	sBox Installation plate for tile mounted installation	28014000

Measurements within scale drawings are in mm.
Technical specifications and units of measure are subject to change.

Basic set for 3-hole rim mounted single lever bath mixer

Features

/ sBox for quiet, smooth and protected hose guidance
/ drilling diameter: 35 mm, 50 mm
/ clamping range: 0 – 30 mm
/ maximum pull-out length of hand shower: 1,45 m
/ suitable for installation on bath rim
/ connection thread: G ½
/ connection hose length: 600 mm
/ connection dimension: DN15
/ bath rim width at least 80 mm
/ drilling diameter on bath tub: two drilled holes Ø 50/51 mm and connection by sawing out required (consider template)

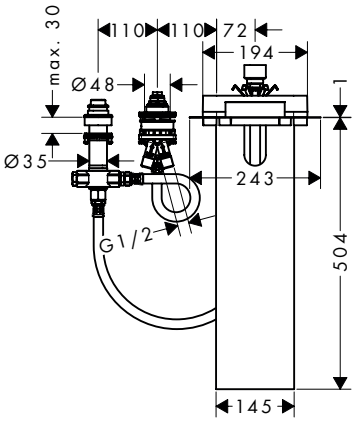

Code no.
15487180

Rim and tile mounted bath basic set

Features

/ suitable for rim or tile mounted installation
/ 1 function
/ connection thread: R ½
/ connection dimension: DN15
/ connection hose length: 600 mm
/ bath rim width at least 80 mm
/ drilling diameter on bath tub: two drilled holes Ø 50/51 mm and connection by sawing out required (consider template)
/ clamping range: 0 – 30 mm

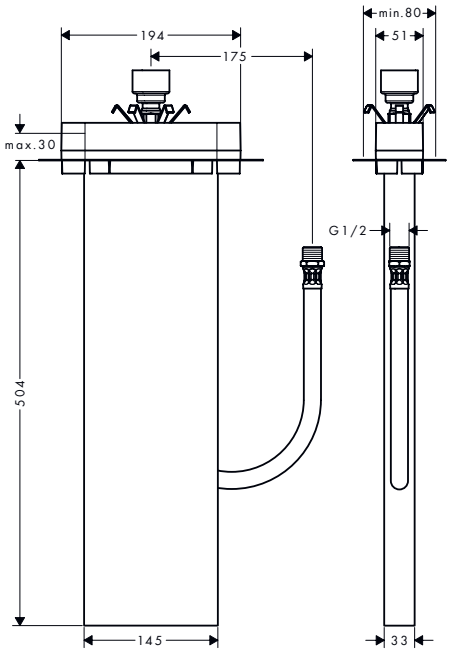

Code no.
15490180

Optional parts:		Code no.
	sBox Installation plate for tile mounted installation	28014000
	sBox Mounting angle set for installation plate for tile mounted installation	28011000

*AXOR FinishPlus: For further AXOR FinishPlus surfaces please see the AXOR FinishPlus overview on page 44.

Installation plate for tile mounted installation

Features

/ dimension: 350 x 120 mm

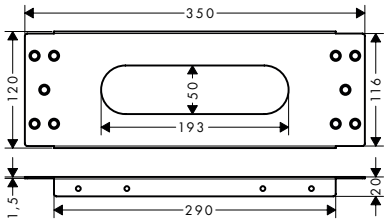

Code no.
28014000

Mounting angle set for installation plate for tile mounted installation

Features

/ maximum mounting height: 750 mm
/ minimum mounting height: 400 mm
/ packaging unit: 2 pieces

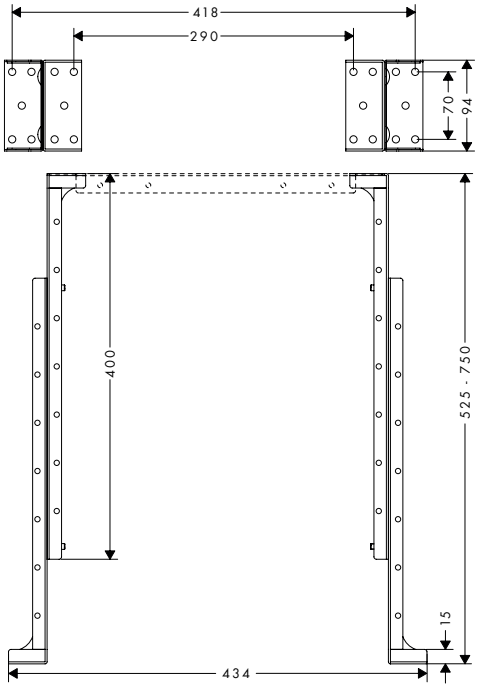

Code no.
28011000

Waste set pop-up for basin and bidet mixers

Features

/ operation via pull-rod
/ for basins with overflow hole
/ material of drain plug: brass
/ connection dimension: G 1¼
/ with overflow

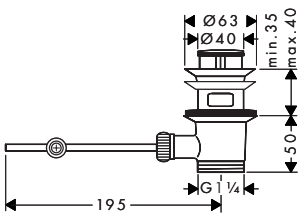

Finish	Code no.
Chrome	51302000
AXOR FinishPlus*	51302XXX

Measurements within scale drawings are in mm.
Technical specifications and units of measure are subject to change.

Waste set push-open for basin and bidet mixers

Features

/ operation with pressure plug
/ for basins with overflow hole
/ material of drain plug: brass
/ connection dimension: G 1¼
/ with overflow

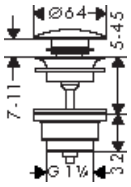

Finish	Code no.
Chrome	51300000
Brushed Bronze	51300140
Brushed Black Chrome	51300340
Matt Black	51300670
Matt White	51300700
Brushed Nickel	51300820
Polished Gold Optic	51300990
AXOR FinishPlus*	51300XXX

Waste set non-closing for washbasins

Features

/ non-closing valve
/ for washbasins without overflow
/ material of drain plug: stainless steel
/ connection dimension: G 1¼

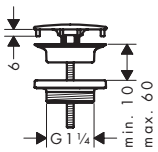

Finish	Code no.
Chrome	51301000
Brushed Bronze	51301140
Brushed Gold Optic	51301250
Polished Red Gold	51301300
Brushed Red Gold	51301310
Polished Black Chrome	51301330
Brushed Black Chrome	51301340
Matt Black	51301670
Matt White	51301700
Stainless Steel Optic	51301800
Brushed Nickel	51301820
Brushed Brass	51301950
Polished Gold Optic	51301990
AXOR FinishPlus*	51301XXX

*AXOR FinishPlus: For further AXOR FinishPlus surfaces please see the AXOR FinishPlus overview on page 44.

Design trap Flowstar

Features

/ adjustment range: 65 – 165 mm
/ distance to wall 330 mm
/ odour trap – backwater height is 70 mm
/ connection dimension entry: G 1¼

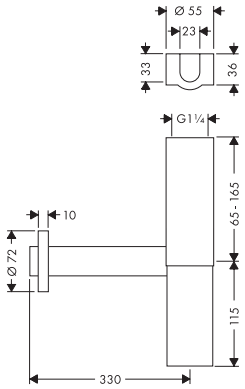

Finish	Code no.
Chrome	51303000
Brushed Nickel	51303820
AXOR FinishPlus*	51303XXX

Design trap set Flowstar

Features

/ consists of: design trap, 2 angle valves, 2 covers
/ adjustment range: 65 – 165 mm
/ distance to wall 330 mm
/ odour trap – backwater height is 75 mm
/ connection dimension entry: G 1¼

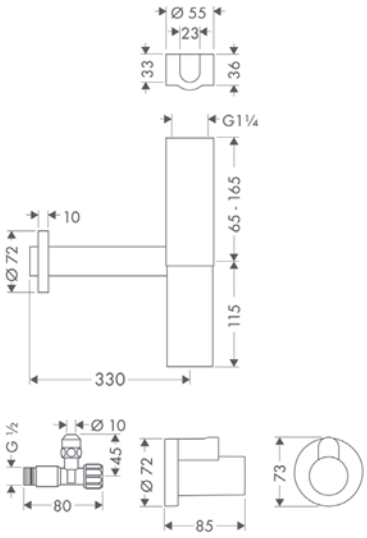

Finish	Code no.
Chrome	51304000
Brushed Nickel	51304820
AXOR FinishPlus*	51304XXX

Design trap Flowstar S

Features

/ adjustment range: 60 – 165 mm
/ distance to wall 330 mm
/ odour trap – backwater height is 75 mm
/ connection dimension entry: G 1¼

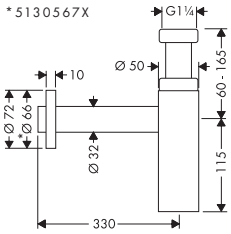

Finish	Code no.
Chrome	51305000
Brushed Bronze	51305140
Brushed Black Chrome	51305340
Matt Black	51305670
Matt White	51305700
Brushed Nickel	51305820
Polished Gold Optic	51305990
AXOR FinishPlus*	51305XXX

Measurements within scale drawings are in mm.
Technical specifications and units of measure are subject to change.

Cover

Features

/ for angle valve
/ packaging unit: 1 piece

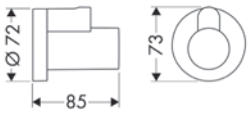

Finish	Code no.
Chrome	51306000
Brushed Bronze	51306140
Brushed Black Chrome	51306340
Matt Black	51306670
Matt White	51306700
Brushed Nickel	51306820
Polished Gold Optic	51306990
AXOR FinishPlus*	51306XXX

Angle valve with cover outlet G 3/8

Features

/ consists of: angle valve, cover
/ connection dimension entry: G ½
/ connection dimension outlet: G ⅜
/ packaging unit: 1 piece

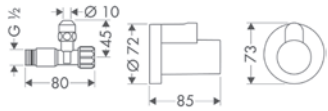

Finish	Code no.
Chrome	51307000
Brushed Bronze	51307140
Brushed Black Chrome	51307340
Brushed Nickel	51307820
Polished Gold Optic	51307990
AXOR FinishPlus*	51307XXX

Angle valve with microfilter outlet G 3/8

Features

/ for protection of mixers against dirt inlet, e.g. for electronic basin mixers
/ connection dimension entry: G ½
/ connection dimension outlet: G ⅜
/ packaging unit: 1 piece

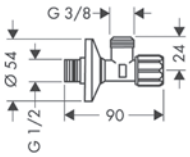

Finish	Code no.
Chrome	51308000

*AXOR FinishPlus: For further AXOR FinishPlus surfaces please see the AXOR FinishPlus overview on page 44.

Angle valve E outlet G 3/8

Features

/ connection dimension entry: G ½ / connection dimension outlet: G ⅜ / packaging unit: 1 piece

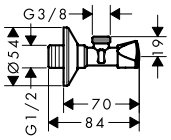

Finish	Code no.
Chrome	51312000

Angle valve E outlet G 1/2

Features

/ connection dimension entry: G ½ / connection dimension outlet: G ½ / packaging unit: 1 piece

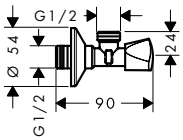

Finish	Code no.
Chrome	51309000

Angle valve S outlet G 3/8

Features

/ connection dimension entry: G ½ / connection dimension outlet: G ⅜ / packaging unit: 1 piece

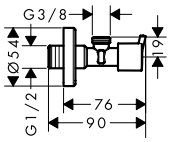

Finish	Code no.
Chrome	51310000

Measurements within scale drawings are in mm.
Technical specifications and units of measure are subject to change.

AXOR
AXOR IBOX UNIVERSAL 2
0140018X

AXOR iBox universal 2
AXOR iBox universal
Basic sets for basin faucets
Basic sets for bathtub faucets
Basic sets for shower faucets
Basic sets for shower drains
Basic sets for overhead showers

AXOR BASIC SETS

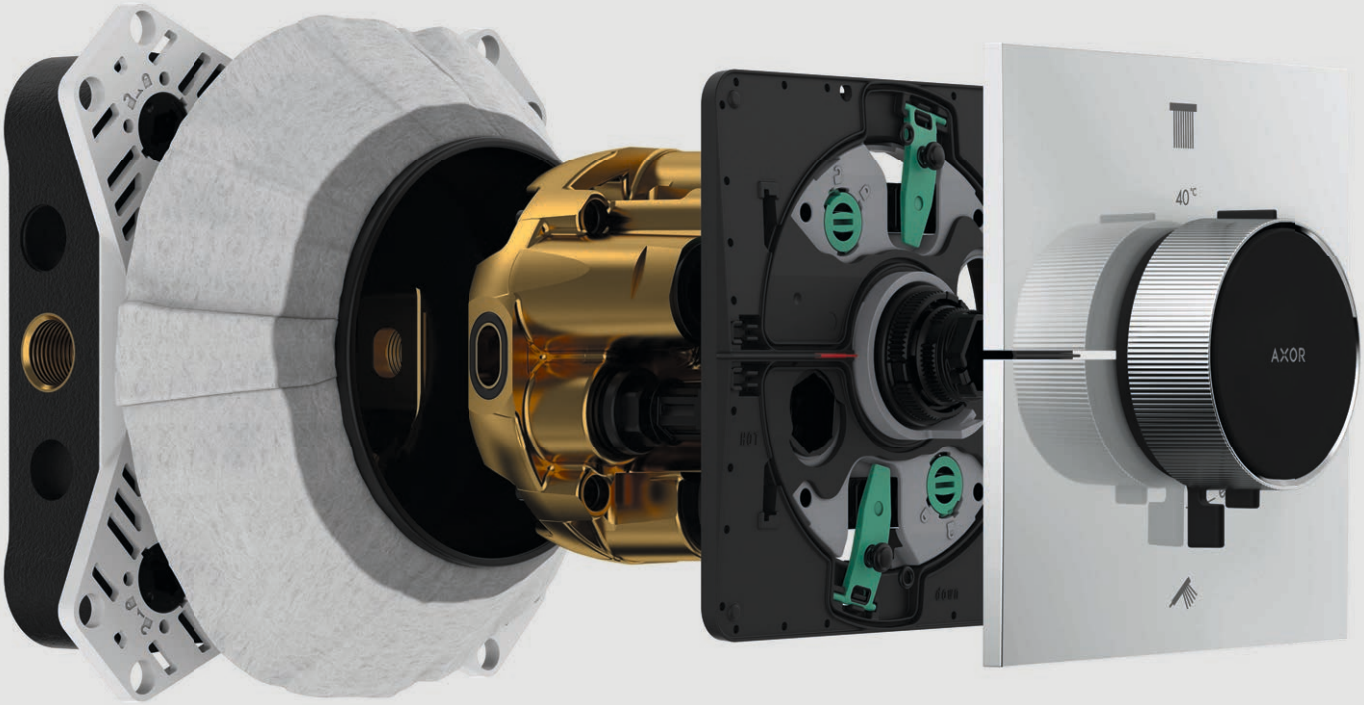
40°C
AXOR
HOT
DOWN

Technology with a system

AXOR basic sets

The perfection of AXOR continues into the wall and below the bathtub or wash basin, always making an appearance where mixers and showers are installed. The AXOR basic sets are based on the many years of expertise gathered by the Hansgrohe Group. They are produced according to the highest quality standards.

Special program highlights:

/ AXOR iBox universal 2
/ Can be combined with all previous and future AXOR finish sets. For older lines, an adapter plate is necessary
/ Fast, flexible, and safe assembly
/ Thanks to sound decoupling, new finish sets have noise class 1
/ Effortless replacement with new mixers for renovations
/ Simplified project planning because one basic set is used for all installations
/ Can be used in both private and public areas
/ Meets common standards worldwide

→ Learn more about AXOR Basic sets: axor-design.com

AXOR iBox universal 2

Powering the sleek design of AXOR ShowerSelect ID is none other than the new AXOR iBox universal 2. A revolutionary basic set for concealed installation that's even faster, smarter and more flexible than its celebrated predecessor introduced 23 years prior, AXOR iBox universal 2 represents the future of concealed- installed AXOR products. By its streamlined, modular design, this basic set enables unprecedentedly slimmer escutcheons while making increasingly complex, cutting-edge product arrangements both more powerful in function and easier to install than ever before. Simply put, the promise of AXOR iBox universal 2 lies in its name—one universal solution for a vast variety of concealed AXOR thermostats, to meet the exacting demands of both today's and tomorrow's bathrooms. The new AXOR iBox universal 2 can also be combined with all previous and future AXOR finish sets. Finish sets of existing collections only require an adapter plate for installation.

iBox universal

AXOR stands for perfection in every dimension. One example: iBox universal. One basic set for numerous types of concealed installations. Uncompromising, reliable and definitely easy to install.

For universal use
One iBox for numerous AXOR finish sets for standard single lever bath and shower mixers and thermostatic mixers as well as multi-jet overhead showers

Many installation options
Can be connected to all common systems

Easy installation
/ Reference points for spirit levels
/ Reference mark for plating

Moisture protection
Absolutely waterproof, can be installed horizontally

Rotationally symmetric

Includes flush block

Sound-decoupled installation

Flexible adjustment ring
For various installation depths

Basic set

Features

/ suitable for all new shower, bath tub and thermostat finish sets for concealed installation (AXOR ShowerSelect ID)
/ in conjunction with adapter plate (# 13588000) compatible with other concealed shower, bath tub and thermostat finish sets
/ material: dezincification brass, EPP foam, heat and sound insulating
/ connection thread: Rp ½
/ connection dimension: DN15
/ rotationally-symmetric installation
/ sound-decoupled installation
/ flexible mounting ring for different mounting situations
/ mounting ring adjustable in 5 mm steps
/ mounting ring suitable for front and rear installation
/ no shortening necessary thanks to sliding sleeve
/ support aid for the spirit level
/ integrated spirit level for correct horizontal and vertical alignment
/ sealing foil permanently fixed
/ minimum mounting depth: 80 mm
/ maximum mounting depth: 108 mm

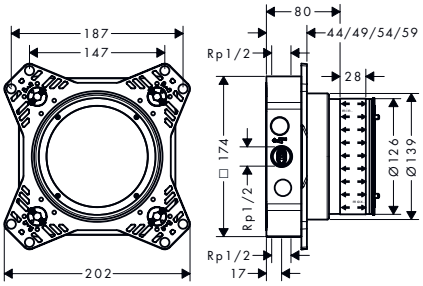

Technologies

Easy Installation

Installation

Water Damage Protection

Code no.
01400180

Optional parts:		Code no.
	Adapter plate for iBox universal 2	13588000
	Extension iBox universal 2 basic set 25 mm	13637000
	Extension finish sets 25 - 75 mm	13632000
	Extension finish sets 25 mm	13638000

Adapter plate for iBox universal 2

Features

/ is required when installing iBox universal (# 01800180, # 01700180) compatible overhead showers, shower, bath tub and thermostat finish sets for concealed installation in conjunction with the iBox universal 2 (# 01500180, # 01400180)

Code no.
13588000

Measurements within scale drawings are in mm.
Technical specifications and units of measure are subject to change.

Extension finish sets 25 mm

Features

/ extension for finish sets ShowerSelect Comfort, DuoTurn, AXOR ShowerSelect ID and AXOR Citterio C bath/shower mixer
/ is required if the basic set is installed too deep
/ extension length: 25 mm

Code no.
13638000

Extension finish sets 25 - 75 mm

Features

/ extension for finish sets ShowerSelect Comfort, DuoTurn, AXOR ShowerSelect ID and AXOR Citterio C bath/shower mixer
/ is required if the basic set is installed too deep
/ extension length: 25 - 75 mm

Code no.
13632000

Extension iBox universal 2 basic set 25 mm

Features

/ extension for basic set
/ is required if the basic set is installed too deep
/ extension length: 25 mm

Code no.
13637000

*AXOR FinishPlus: For further AXOR FinishPlus surfaces please see the AXOR FinishPlus overview on page 44.

Extension element 5 mm

Features of all variants

/ for installation between tiles and finish set
/ is required if the basic set is installed too flat
/ for larger tile coverage
/ suitable for AXOR ShowerSelect ID
/ dimension: 170 x 170 mm
/ extension length: 5 mm

round

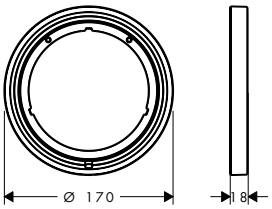

square

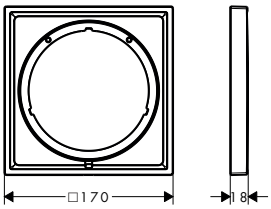

softsquare

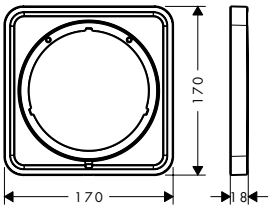

Overview variants

Shape	Finish	Code no.
round	Chrome	13642000
	Brushed Bronze	13642140
	Brushed Black Chrome	13642340
	Matt Black	13642670
	Matt White	13642700
	Polished Gold Optic	13642990
	AXOR FinishPlus*	13642XXX
square	Chrome	13641000
	Brushed Bronze	13641140
	Brushed Black Chrome	13641340
	Matt Black	13641670
	Polished Gold Optic	13641990
	AXOR FinishPlus*	13641XXX
softsquare	Chrome	13640000
	Brushed Bronze	13640140
	Brushed Black Chrome	13640340
	Matt Black	13640670
	Polished Gold Optic	13640990
	AXOR FinishPlus*	13640XXX

Measurements within scale drawings are in mm.
Technical specifications and units of measure are subject to change.

Extension element 22 mm

Features of all variants

/ for installation between tiles and finish set
/ is required if the basic set is installed too flat
/ for larger tile coverage
/ suitable for AXOR ShowerSelect ID
/ dimension: 170 x 170 mm
/ extension length: 22 mm

round

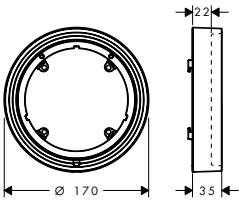

square

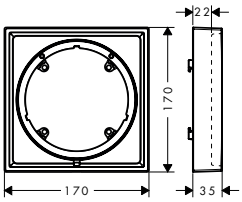

softsquare

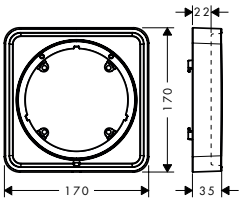

Overview variants

Shape	Finish	Code no.
round	Chrome	13646000
	Brushed Bronze	13646140
	Brushed Black Chrome	13646340
	Matt Black	13646670
	Matt White	13646700
	Polished Gold Optic	13646990
	AXOR FinishPlus*	13646XXX
square	Chrome	13645000
	Brushed Bronze	13645140
	Brushed Black Chrome	13645340
	Matt Black	13645670
	Polished Gold Optic	13645990
	AXOR FinishPlus*	13645XXX
softsquare	Chrome	13643000
	Brushed Bronze	13643140
	Brushed Black Chrome	13643340
	Matt Black	13643670
	Polished Gold Optic	13643990
	AXOR FinishPlus*	13643XXX

*AXOR FinishPlus: For further AXOR FinishPlus surfaces please see the AXOR FinishPlus overview on page 44.

Basic set

Features

/ suitable for all shower, bath tub and thermostat finish sets for concealed installation
/ connection thread: Rp ¾
/ connection dimension: DN20
/ rotationally-symmetric installation
/ sound-decoupled installation
/ minimum mounting depth: 80 mm
/ maximum mounting depth: 108 mm

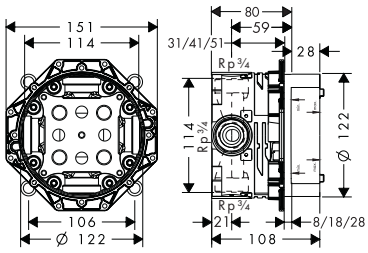

Certificates/declarations

	Code no.
	01700180

Optional parts:		Code no.
	Assembly aid for iBox universal + iBox universal 2	93500000
	Fastening rail set for iBox universal	93171000
	Extension 25 mm for basic set iBox universal	13587000
	Reduction coupling iBox universal	97759000

Basic set with shut-off unit

Features

/ suitable for all shower, bath tub and thermostat finish sets for concealed installation
/ connection thread: Rp ¾
/ connection dimension: DN20
/ sound-decoupled installation
/ minimum mounting depth: 80 mm
/ maximum mounting depth: 108 mm

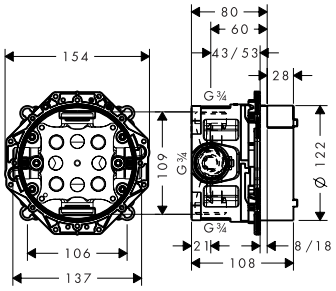

	Code no.
	01750180

Optional parts:		Code no.
	Assembly aid for iBox universal + iBox universal 2	93500000
	Fastening rail set for iBox universal	93171000
	Extension 25 mm for basic set iBox universal	13587000
	Reduction coupling iBox universal	97759000

Measurements within scale drawings are in mm.
Technical specifications and units of measure are subject to change.

Assembly aid for iBox universal + iBox universal 2

Features

/ spirit levels for correct horizontal and vertical alignment of the iBox universal and iBox universal 2
/ with fixations to simply put the assembly aid on the iBox universal and iBox universal 2
/ markings for the tile spacer
/ 4 more fixation aids all around, thus against rotation

Code no.
93500000

Extension 25 mm for basic set iBox universal

Features

/ extension for basic set
/ extension length: 25 mm

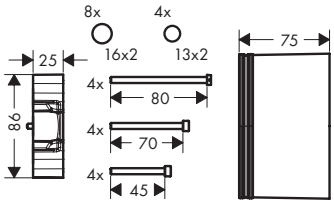

Code no.
13587000

Extension element

Features

/ for installation between tiles and finish set
/ suitable for all square finish sets for concealed installation with round edges
/ dimension: 172 x 172 mm
/ extension length: 22 mm

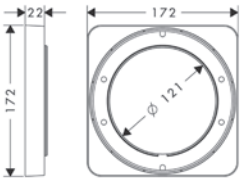

Finish	Code no.
Chrome	98860000
AXOR FinishPlus*	98860XXX

*AXOR FinishPlus: For further AXOR FinishPlus surfaces please see the AXOR FinishPlus overview on page 44.

Extension element round 1-hole

Features

/ for situations of limited depth for concealed installation
/ diameter: 170 mm
/ dimension: 18 mm higher than the default escutcheon
/ extension length: 33 mm
/ material: metal escutcheon

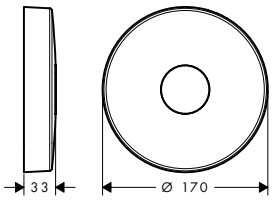

Finish	Code no.
Chrome	14960000
Brushed Black Chrome	14960340
AXOR FinishPlus*	14960XXX

Extension element round 2-hole

Features

/ for situations of limited depth for concealed installation
/ diameter: 170 mm
/ dimension: 18 mm higher than the default escutcheon
/ extension length: 33 mm
/ material: metal escutcheon

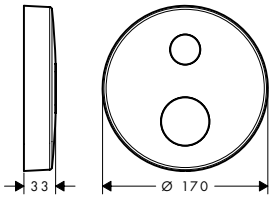

Finish	Code no.
Chrome	14961000
Brushed Black Chrome	14961340
AXOR FinishPlus*	14961XXX

Extension element round 2-hole 0-1-2

Features

/ for situations of limited depth for concealed installation
/ diameter: 170 mm
/ dimension: 18 mm higher than the default escutcheon
/ extension length: 33 mm
/ material: metal escutcheon

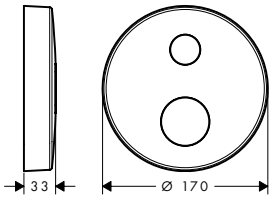

Finish	Code no.
Chrome	14962000
AXOR FinishPlus*	14962XXX

Measurements within scale drawings are in mm.
Technical specifications and units of measure are subject to change.

Extension element round 2-hole arrow

Features

/ for situations of limited depth for concealed installation
/ diameter: 170 mm
/ dimension: 18 mm higher than the default escutcheon
/ extension length: 33 mm
/ material: metal escutcheon

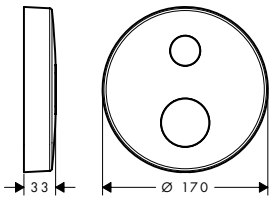

Finish	Code no.
Chrome	14963000
AXOR FinishPlus*	14963XXX

Extension element square 1-hole

Features

/ for situations of limited depth for concealed installation
/ diameter: 170 mm
/ dimension: 18 mm higher than the default escutcheon
/ extension length: 33 mm
/ material: metal escutcheon

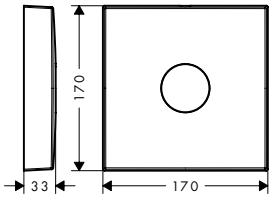

Finish	Code no.
Chrome	14964000
AXOR FinishPlus*	14964XXX

Extension element square 1-hole red blue

Features

/ for situations of limited depth for concealed installation
/ diameter: 170 mm
/ dimension: 18 mm higher than the default escutcheon
/ extension length: 33 mm
/ material: metal escutcheon

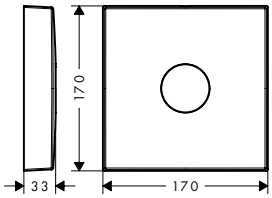

Finish	Code no.
Chrome	14965000
AXOR FinishPlus*	14965XXX

*AXOR FinishPlus: For further AXOR FinishPlus surfaces please see the AXOR FinishPlus overview on page 44.

Extension element square 2-hole

Features

/ for situations of limited depth for concealed installation
/ diameter: 170 mm
/ dimension: 18 mm higher than the default escutcheon
/ extension length: 33 mm
/ material: metal escutcheon

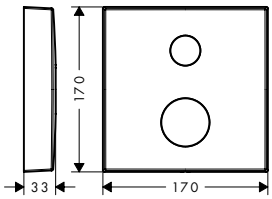

Finish	Code no.
Chrome	14967000
AXOR FinishPlus*	14967XXX

Extension element square 2-hole 0-1-2

Features

/ for situations of limited depth for concealed installation
/ diameter: 170 mm
/ dimension: 18 mm higher than the default escutcheon
/ extension length: 33 mm
/ material: metal escutcheon

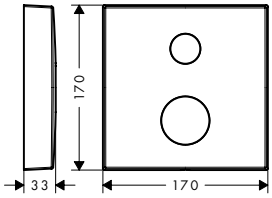

Finish	Code no.
Chrome	14969000
AXOR FinishPlus*	14969XXX

Extension element square 2-hole arrow

Features

/ for situations of limited depth for concealed installation
/ diameter: 170 mm
/ dimension: 18 mm higher than the default escutcheon
/ extension length: 33 mm
/ material: metal escutcheon

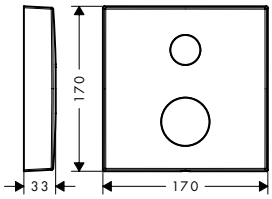

Finish	Code no.
Chrome	14970000
AXOR FinishPlus*	14970XXX

Measurements within scale drawings are in mm.
Technical specifications and units of measure are subject to change.

Extension element softsquare 1-hole

Features

/ for situations of limited depth for concealed installation
/ diameter: 170 mm
/ dimension: 18 mm higher than the default escutcheon
/ extension length: 33 mm
/ material: metal escutcheon

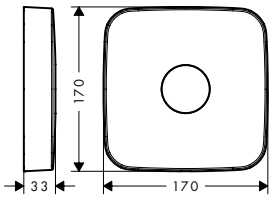

Finish	Code no.
Chrome	14971000
AXOR FinishPlus*	14971XXX

Extension element softsquare 2-hole

Features

/ for situations of limited depth for concealed installation
/ diameter: 170 mm
/ dimension: 18 mm higher than the default escutcheon
/ extension length: 33 mm
/ material: metal escutcheon

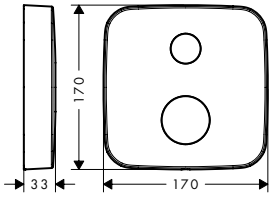

Finish	Code no.
Chrome	14972000
AXOR FinishPlus*	14972XXX

Extension element softsquare 2-hole 0-1-2

Features

/ for situations of limited depth for concealed installation
/ diameter: 170 mm
/ dimension: 18 mm higher than the default escutcheon
/ extension length: 33 mm
/ material: metal escutcheon

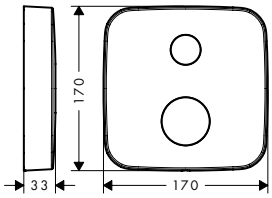

Finish	Code no.
Chrome	14973000
AXOR FinishPlus*	14973XXX

*AXOR FinishPlus: For further AXOR FinishPlus surfaces please see the AXOR FinishPlus overview on page 44.

Extension element softsquare 2-hole arrow

Features

/ for situations of limited depth for concealed installation
/ diameter: 170 mm
/ dimension: 18 mm higher than the default escutcheon
/ extension length: 33 mm
/ material: metal escutcheon

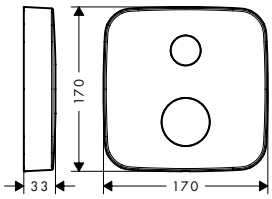

Finish	Code no.
Chrome	14974000
AXOR FinishPlus*	14974XXX

Extension element

Features

/ for situations of limited depth for concealed installation
/ diameter: 80 mm
/ extension length: 22 mm
/ material: metal escutcheon

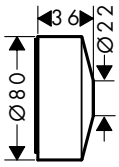

Finish	Code no.
Chrome	13610000
Matt Black	13610670
Matt White	13610700
AXOR FinishPlus*	13610XXX

Escutcheon 90 mm

Features

/ for larger tile coverage
/ diameter: 90 mm
/ material: metal escutcheon

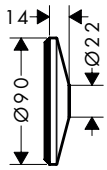

Finish	Code no.
Chrome	13611000
Matt Black	13611670
Matt White	13611700
AXOR FinishPlus*	13611XXX

Measurements within scale drawings are in mm.
Technical specifications and units of measure are subject to change.

Fastening rail set for iBox universal

Features

/ quick installation and alignment of the iBox universal in various installation situations
/ for bridging large or wide wall recesses
/ individually bendable for pre-wall mounting

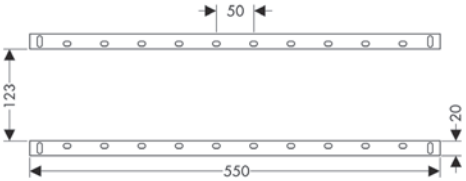

Code no.
93171000

Basic set for electronic basin mixer for concealed installation wall-mounted

Features

/ suitable for infrared wall spout
/ connection dimension: DN20
/ maximum flow rate at 3 bar: 5 l/min
/ minimum mounting depth: 80 mm
/ maximum mounting depth: 108 mm

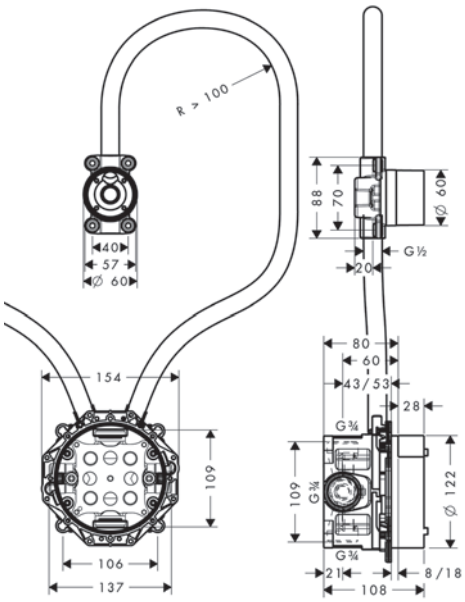

Certificates/declarations

Code no.
16180180

Optional parts:	Code no.
Extension 25 mm for basic set for electronic basin mixer wall-mounted	13594000

Extension 25 mm for basic set for electronic basin mixer wall-mounted

Features

/ extension for basic set
/ suitable for all wall-mounted electronic mixers
/ extension length: 25 mm

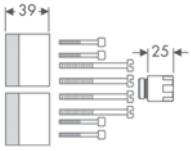

Code no.
13594000

Measurements within scale drawings are in mm.
Technical specifications and units of measure are subject to change.

Basic set for electronic basin mixer

Features

/ empty tube EN20 for power supply
/ connection dimension: DN20
/ minimum mounting depth: 80 mm
/ maximum mounting depth: 108 mm

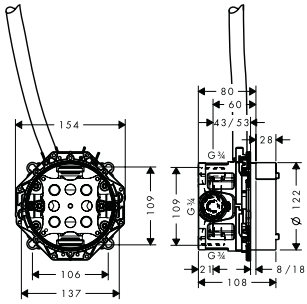

Certificates/declarations

Code no.
16182180

Optional parts:	Code no.
Reduction coupling iBox universal	97759000

Basic set for single lever basin mixer for concealed installation wall-mounted

Features

/ variable positioning of the mixer system, can be left or right of the spout
/ easy orientation due to support surfaces for the spirit level
/ with building protection cover against contamination during assembly
/ with dimension indication for exact determination of the installation depth
/ with pre-mounted fastening lugs for mounting in drywall and solidwall
/ sound-decoupled installation
/ connection dimension: DN15
/ minimum mounting depth: 44 mm
/ maximum mounting depth: 72 mm

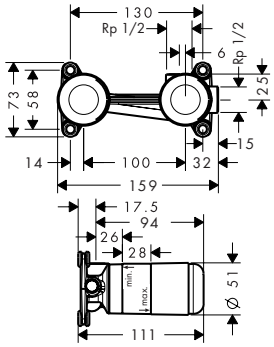

Certificates/declarations

Code no.
13623180

Optional parts:	Code no.
Extension set 25 mm for single lever basin mixer wall-mounted	13586000

*AXOR FinishPlus: For further AXOR FinishPlus surfaces please see the AXOR FinishPlus overview on page 44.

Extension set 25 mm for single lever basin mixer wall-mounted

Features

/ extension length: 25 mm

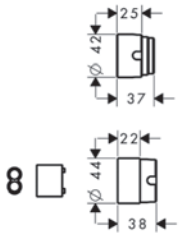

Code no.
13586000

Basic set for basin mixer for concealed installation wall-mounted Select

Features

/ sound-decoupled installation

/ connection dimension: G ½

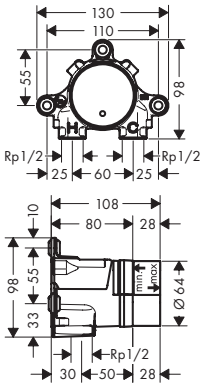

Code no.
13625180

Optional parts:		Code no.
	AXOR One Extension 25 mm for basic set basin mixer for concealed installation wall-mounted Select	13609000

Extension 25 mm for basic set basin mixer for concealed installation wall-mounted Select

Features

/ extension for basic set

/ extension length: 25 mm

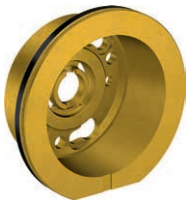

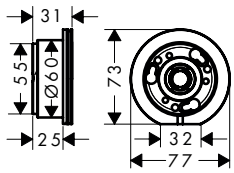

Code no.
13609000

Measurements within scale drawings are in mm.
Technical specifications and units of measure are subject to change.

Basic set for Showerpipe/ shower column

Features

/ connection dimension: G ½
/ no additional maintenance opening required
/ rotationally-symmetric installation
/ minimum mounting depth: 45 mm
/ maximum mounting depth: 73 mm

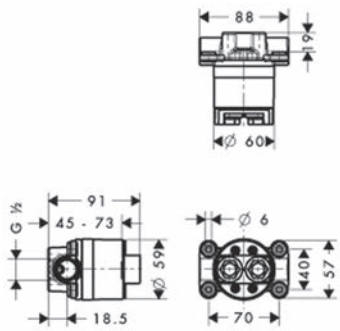

	Code no.
	10902180

Required parts:		Code no.
	AXOR Starck Seal	96660000

Optional parts:		Code no.
	AXOR Starck Extension set 28 mm for shower columns	10980000
	AXOR Starck Organic Extension set 28 mm for basin mixer wall-mounted	12918000
	AXOR Urquiola Extension set 28 mm for single lever basin mixer wall-mounted	11980000

Extension set 28 mm for single lever basin mixer wall-mounted

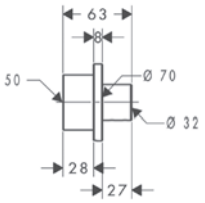

	Code no.
	11980000

*AXOR FinishPlus: For further AXOR FinishPlus surfaces please see the AXOR FinishPlus overview on page 44.

Extension set 28 mm for basin mixer wall-mounted

Features

/ extension for basic set

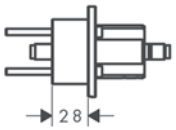

Code no.
12918000

Basic set for 3-hole basin mixer for concealed installation wall-mounted

Features

/ suitable for all 3-hole wash basin mixers for wall mounting
/ connection dimension: DN15/DN20
/ connection from above or below
/ minimum mounting depth: 70 mm
/ maximum mounting depth: 95 mm

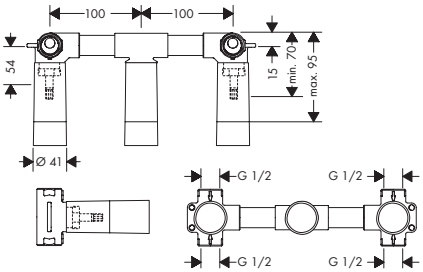

Certificates/declarations

Code no.
10303180

Optional parts:		Code no.
	Seal	96383000
	AXOR Starck Extension set 25 mm for basic set for 3-hole basin mixer wall-mounted	96259000

Measurements within scale drawings are in mm.
Technical specifications and units of measure are subject to change.

Extension set 25 mm for basic set for 3-hole basin mixer wall-mounted

Features

/ connection dimension: DN15
/ extension length: 25 mm

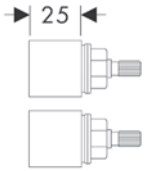

Code no.
96259000

Seal

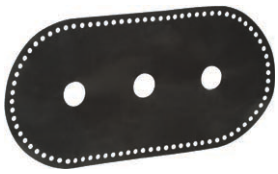

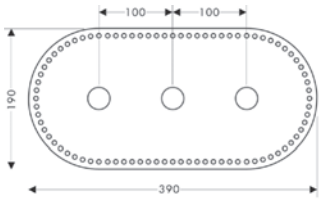

Code no.
96383000

Basic set for mixers floor-standing

Features

/ for mounting on unfinished floor
/ suitable for single lever bath mixer, single lever basin mixer and bath spout floor-standing
/ connection dimension: DN15
/ minimum mounting depth: 53 mm
/ maximum mounting depth: 133 mm

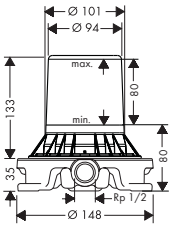

Certificates/declarations

Code no.
10452180

Optional parts:		Code no.
	Sealing foil for basic set bath mixer floor-standing	96441000

Sealing foil for basic set bath mixer floor-standing

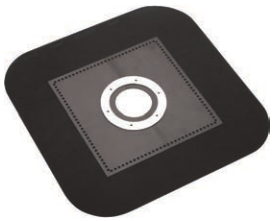

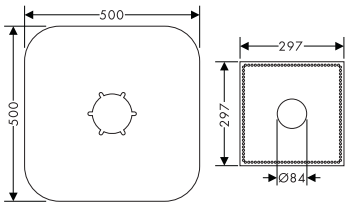

Code no.
96441000

Basic set for 2-handle bath mixer floor-standing

Features

/ two seals necessary
/ for mounting on unfinished floor
/ connection dimension: DN15

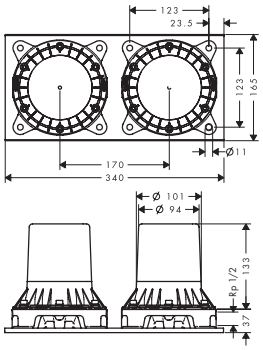

Code no.
16549180

Optional parts:		Code no.
	Sealing foil for basic set bath mixer floor-standing	96441000

Basic set for 2-hole rim mounted thermostatic bath mixer

Features

/ suitable for remote spout
/ connection thread: G ½
/ connection dimension: DN15
/ flow rate upper outlet: 31 l/min
/ flow rate lower outlet: 31 l/min

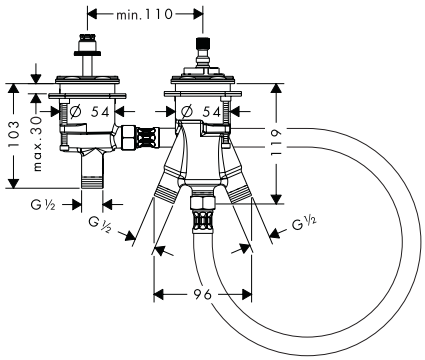

Certificates/declarations

Code no.
15486180

Measurements within scale drawings are in mm.
Technical specifications and units of measure are subject to change.

Basic set for 3-hole rim mounted bath mixer

Features

/ maintenance opening required
/ connection thread: G ½
/ connection dimension: DN15
/ ceramic valves hot/cold 90°

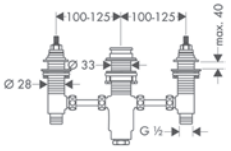

Code no.
15484180

Basic set for 3-hole rim mounted single lever bath mixer

Features

/ maximum pull-out length of hand shower: 1.10 m
/ connection dimension: DN15

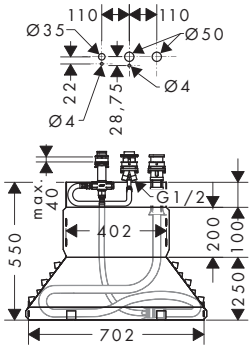

Code no.
15485180

Basic set for 4-hole rim mounted thermostatic bath mixer

Features

/ maximum pull-out length of hand shower: 1.10 m
/ connection dimension: DN15

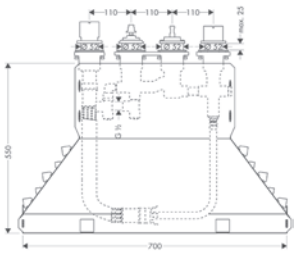

Code no.
15482180

Optional parts:		Code no.
	Secuflex insert extension	98806000

*AXOR FinishPlus: For further AXOR FinishPlus surfaces please see the AXOR FinishPlus overview on page 44.

Basic set for 4-hole rim mounted bath mixer

Features

/ maximum pull-out length of hand shower: 1.10 m / connection dimension: DN15

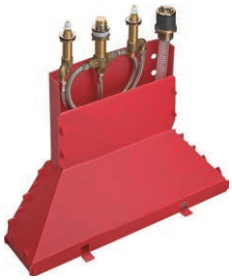

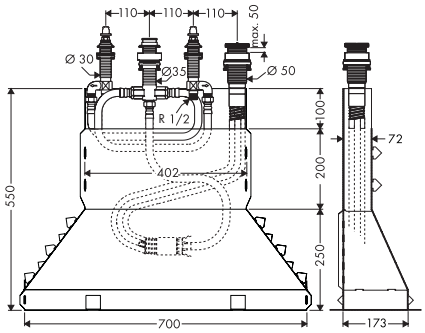

Certificates/declarations

Code no.
15480180

Optional parts:	Code no.
Secuflex insert extension	98806000

Basic set for 4-hole tile mounted thermostatic bath mixer

Features

/ maximum pull-out length of hand shower: 1.10 m / connection dimension: DN15

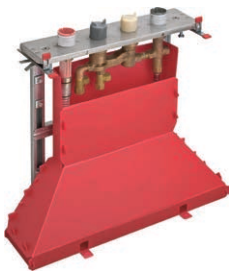

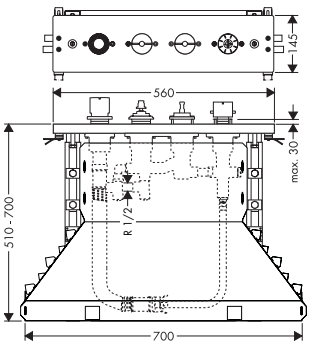

Code no.
15483180

Optional parts:	Code no.
Secuflex insert extension	98806000

Measurements within scale drawings are in mm.
Technical specifications and units of measure are subject to change.

Basic set for 4-hole tile mounted bath mixer

Features

/ maximum pull-out length of hand shower: 1.10 m
/ connection dimension: DN15

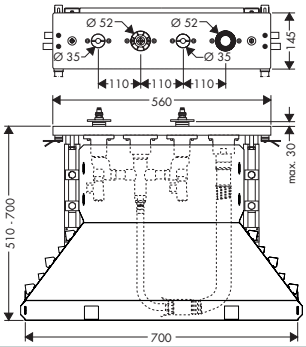

Code no.
15481180

Optional parts:	Code no.
Secuflex insert extension	98806000

Basic set for thermostatic module Select for 2 functions

Features

/ 2 functions
/ connection thread: Rp ¾
/ connection dimension: DN15/DN20
/ horizontal installation
/ sound-decoupled installation
/ minimum mounting depth: 94 mm
/ maximum mounting depth: 122 mm

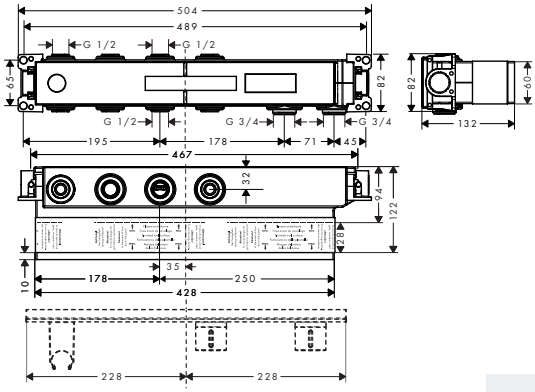

Certificates/declarations

Code no.
18310180

Basic set for thermostatic module Select for 3 functions

Features

/ 3 functions
/ connection thread: Rp ¾
/ connection dimension: DN15/DN20
/ horizontal installation
/ sound-decoupled installation
/ minimum mounting depth: 92 mm
/ maximum mounting depth: 120 mm

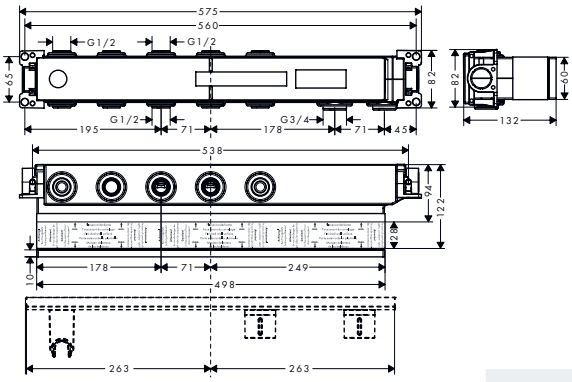

Certificates/declarations

Code no.
18311180

*AXOR FinishPlus: For further AXOR FinishPlus surfaces please see the AXOR FinishPlus overview on page 44.

Basic set for thermostatic module Select for 4 functions

Features

/ 4 functions
/ connection thread: Rp ¾
/ connection dimension: DN15/DN20
/ horizontal installation
/ sound-decoupled installation
/ minimum mounting depth: 92 mm
/ maximum mounting depth: 120 mm

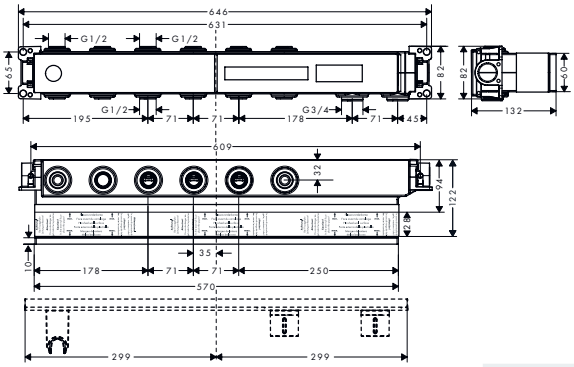

Certificates/declarations

Code no.
18312180

Basic set for thermostatic module Select for 5 functions

Features

/ 5 functions
/ connection thread: Rp ¾
/ connection dimension: DN15/DN20
/ horizontal installation
/ sound-decoupled installation
/ minimum mounting depth: 92 mm
/ maximum mounting depth: 120 mm

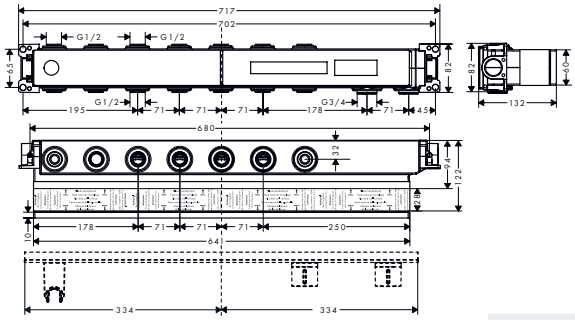

Certificates/declarations

Code no.
18313180

Measurements within scale drawings are in mm.
Technical specifications and units of measure are subject to change.

Basic set for thermostatic module 360/120 for concealed installation

Features

/ connection from left or right
/ 3 outlets can be used simultaneously
/ connection dimension: DN20
/ flow rate at free through-flow: 59 l/min
/ spindle valves
/ horizontal or vertical installation
/ sound-decoupled installation
/ in a joined installation it serves as a waterconducting unit and allows dimensionally accurate positioning

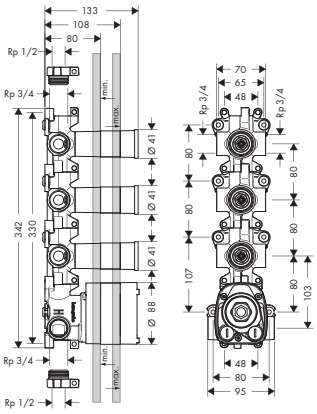

Certificates/declarations

Code no.
10750180

Basic set for thermostatic module 120/120 for concealed installation

Features

/ connection dimension: DN20
/ flow rate at free through-flow: 59 l/min
/ horizontal or vertical installation
/ sound-decoupled installation
/ in a joined installation it serves as a waterconducting unit and allows dimensionally accurate positioning

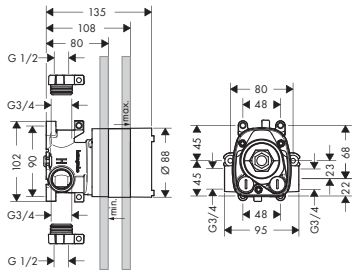

Code no.
10754180

Basic sets for thermostatic module 380/120 for concealed installation

Features of all variants

/ 2 outlets can be used simultaneously
/ connection dimension: DN20
/ flow rate at free through-flow: 59 l/min
/ horizontal or vertical installation
/ sound-decoupled installation
/ in a joined installation it serves as a waterconducting unit and allows dimensionally accurate positioning

2 functions

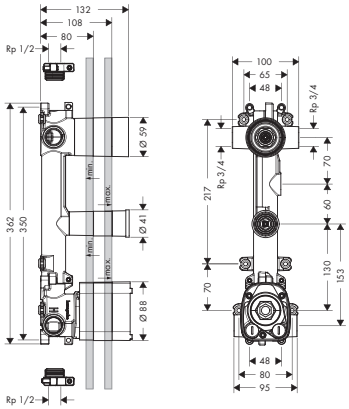

3 functions

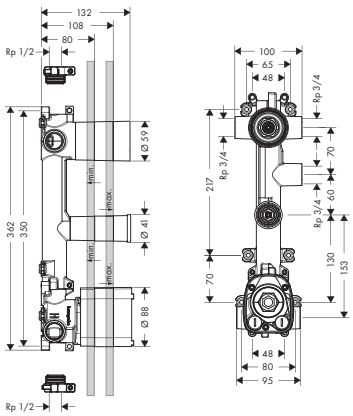

Certificates/declarations

For more information about this product, please see the next page.

*AXOR FinishPlus: For further AXOR FinishPlus surfaces please see the AXOR FinishPlus overview on page 44.

Basic sets for thermostatic module 380/120 for concealed installation

Overview variants

Number of functions	Code no.
2 functions	36701180
3 functions	36708180

Basic set for thermostatic module for concealed installation

Features

/ 2 inlets/4 outlets
/ all outlets can be used simultaneously
/ connection thread: Rp ½
/ sound-decoupled installation
/ minimum mounting depth: 80 mm
/ maximum mounting depth: 108 mm

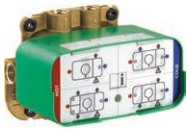

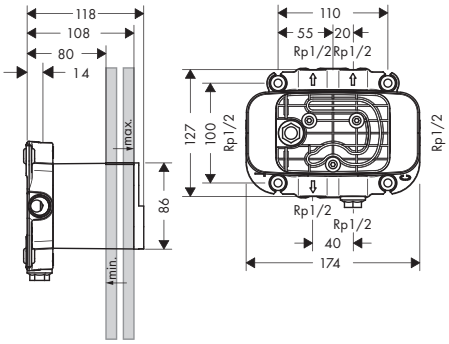

Certificates/declarations

Code no.
45710180

Extension set 25 mm for basic set thermostatic module

Features

/ extension for basic set
/ extension length: 25 mm

Finish	Code no.
	45790000
AXOR FinishPlus*	45790XXX

Required parts:	Code no.
AXOR One Basic set for thermostatic module for concealed installation	45710180

Measurements within scale drawings are in mm.
Technical specifications and units of measure are subject to change.

Basic set for shut-off valve 120/120 for concealed installation

Features

/ suitable for all shut-off valves finish sets
/ connection from left or right
/ connection dimension: DN15
/ flow rate at free through-flow: 55 l/min
/ sound-decoupled installation
/ in a joined installation it serves as a waterconducting unit and allows dimensionally accurate positioning

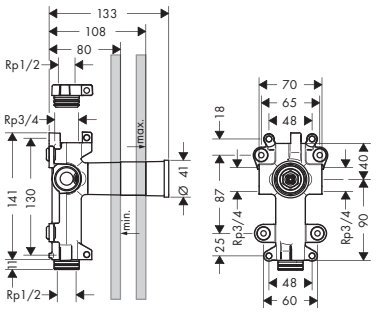

Code no.
10971180

Optional parts:	Code no.
Extension set 25 mm for shut-off/ diverter valve Trio-/ Quattro	92990000

Basic set for shut-off/ diverter valve Trio 120/120 for concealed installation

Features

/ 2 functions
/ 1 inlet/ 2 outlets
/ 2 outlets can be used simultaneously
/ connection thread: Rp ¾
/ connection dimension: DN20
/ horizontal or vertical installation
/ sound-decoupled installation
/ in a joined installation it serves as a waterconducting unit and allows dimensionally accurate positioning

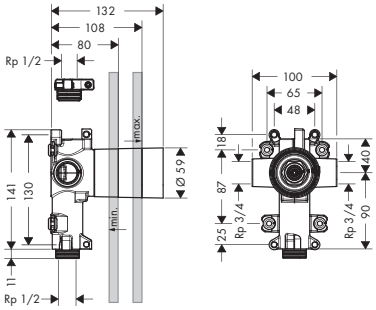

Code no.
36770180

Optional parts:	Code no.
Extension set 25 mm for shut-off/ diverter valve Trio-/ Quattro	92990000

*AXOR FinishPlus: For further AXOR FinishPlus surfaces please see the AXOR FinishPlus overview on page 44.

Basic set for shut-off valve for concealed installation

Features

/ connection from left or right
/ connection dimension: DN15
/ flow rate at free through-flow: 30 l/min
/ sound-decoupled installation
/ in a joined installation it serves as a waterconducting unit and allows dimensionally accurate positioning

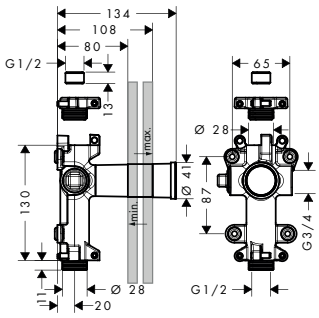

Code no.
45770180

Basic set 52 l/min for shut-off valve for concealed installation spindle

Features

/ connection type: DN15
/ suitable for all shut-off valves finish sets
/ maximum flow rate at 3 bar: 52 l/min
/ connection dimension: DN15
/ minimum mounting depth: 60 mm
/ maximum mounting depth: 88 mm

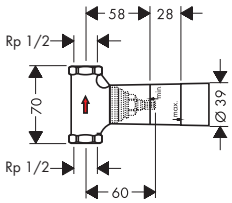

Code no.
16973180

Optional parts:	Code no.
Extension set 25 mm for shut-off/ diverter valve Trio-/ Quattro	92990000

Basic set 40 l/min for shut-off valve for concealed installation ceramic

Features

/ connection type: basic set
/ suitable for all shut-off valves finish sets
/ maximum flow rate at 3 bar: 40 l/min
/ connection dimension: DN15
/ minimum mounting depth: 60 mm
/ maximum mounting depth: 88 mm

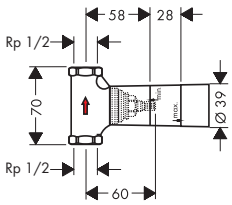

Code no.
16974180

Measurements within scale drawings are in mm.
Technical specifications and units of measure are subject to change.

Basic set 130 l/min for shut-off valve for concealed installation spindle

Features

/ suitable for all shut-off valves finish sets
/ maximum flow rate at 3 bar: 130 l/min
/ connection dimension: DN20
/ minimum mounting depth: 60 mm
/ maximum mounting depth: 88 mm
/ noise class: II

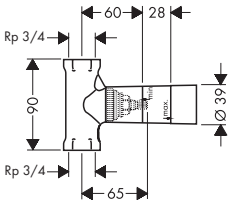

Code no.
16970180

Basic set for shut-off/ diverter valve Trio for concealed installation

Features

/ 2 functions
/ 2 outlets can be used simultaneously

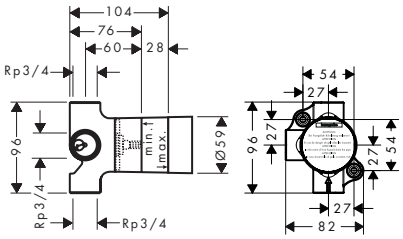

Code no.
16982180

Optional parts:	Code no.
Extension set 25 mm for shut-off/ diverter valve Trio-/ Quattro	92990000

Basic set for Quattro four-way diverter valve for concealed installation

Features

/ requires volume control
/ 3 functions
/ simultaneous utilization of 2 functions
/ suitable for all Quattro finish sets
/ connection dimension: DN20
/ maximum flow rate at 3 bar: 65 l/min

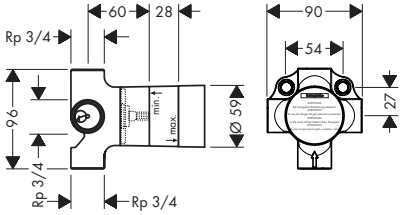

Code no.
16930180

Optional parts:	Code no.
Extension set 25 mm for shut-off/ diverter valve Trio-/ Quattro	92990000

*AXOR FinishPlus: For further AXOR FinishPlus surfaces please see the AXOR FinishPlus overview on page 44.

Basic set for hand shower module 120/120 for concealed installation

Features

/ connection dimension: DN15
/ flow rate at free through-flow: 30 l/min
/ ceramic valve 180°
/ horizontal or vertical installation
/ sound-decoupled installation
/ in a joined installation it serves as a waterconducting unit and allows dimensionally accurate positioning

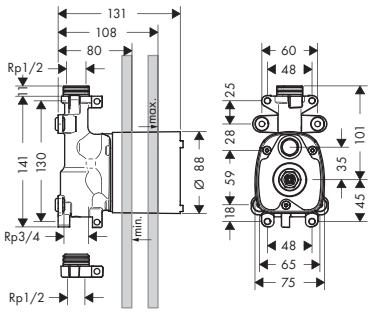

Code no.
10650180

Base set for finish sets for standard installation

Features

/ consists of: basic set, trap, pre-assembled sealing membrane, height adjustment boards, screed protection cover
/ where to use: new construction, renovation
/ water seal height: 50 mm
/ minimum construction height: 75 mm
/ drainage capacity with siphon: up to 33 l/min
/ drainage capacity with Dryphon: up to 55 l/min
/ connection diameter: DN50
/ direction of outlet: horizontal
/ connection: 3-sided
/ easy fixation to the floor with mounting bracket
/ height adjustable with the foam boards
/ mounting type: wall-mounted, free in the floor
/ easy to clean siphon
/ removable siphon
/ suitable for soundproof mounting

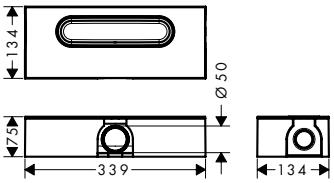

Technologies

Installation

Code no.
01005180

Optional parts:		Code no.
	Wall mounting set	94345000
	Secondary drainage ring	94802000

Measurements within scale drawings are in mm.
Technical specifications and units of measure are subject to change.

Base set for finish sets for flat installation

Features

/ consists of: basic set, trap, pre-assembled sealing membrane, height adjustment boards, screed protection cover
/ where to use: new construction, renovation
/ water seal height: 30 mm
/ minimum construction height: 57 mm
/ drainage capacity with siphon: up to 25 l/min
/ drainage capacity with Dryphon: up to 37 l/min
/ connection diameter: DN40
/ direction of outlet: horizontal
/ connection: 3-sided
/ easy fixation to the floor with mounting bracket
/ height adjustable with the foam boards
/ mounting type: wall-mounted, free in the floor
/ easy to clean siphon
/ removable siphon
/ suitable for soundproof mounting

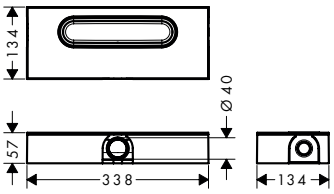

Technologies

Easy Clean Siphon

Installation

Water Damage Protection

Code no.
01006180

Optional parts:		Code no.
	Wall mounting set	94345000
	Secondary drainage ring	94802000

Base set for finish sets for vertical installation

Features

/ consists of: basic set, trap, pre-assembled sealing membrane, screed protection cover
/ where to use: new construction, renovation
/ water seal height: 50 mm
/ minimum construction height: 75 mm
/ drainage capacity with siphon: up to 33 l/min
/ drainage capacity with Dryphon: up to 55 l/min
/ connection diameter: DN50
/ direction of outlet: vertical
/ connection: 1-sided
/ mounting type: wall-mounted, free in the floor
/ easy to clean siphon
/ removable siphon

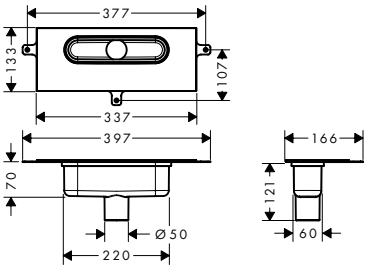

Technologies

Easy Clean Siphon

Installation

Water Damage Protection

Code no.
01007180

Optional parts:		Code no.
	Wall mounting set	94345000
	Fire protection adapter (HT PP socket DN 50)	94343000
	Secondary drainage ring	94802000

*AXOR FinishPlus: For further AXOR FinishPlus surfaces please see the AXOR FinishPlus overview on page 44.

Basic set for ShowerHeaven 1200/300 4jet

Features

/ sound-decoupled installation
/ minimum mounting depth: 75 mm
/ maximum mounting depth: 155 mm
/ connection dimension: Rp ½

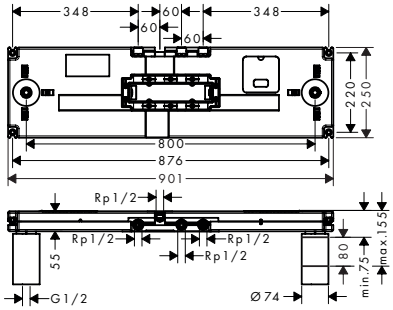

Code no.
10922180

Basic set for ShowerHeaven 1200/300 4jet with light module

Features

/ sound-decoupled installation
/ minimum mounting depth: 75 mm
/ maximum mounting depth: 155 mm
/ connection dimension: Rp ½

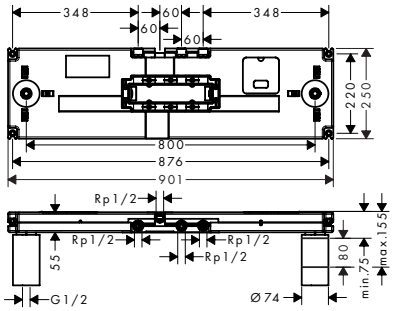

Code no.
12922180

Extension set 230 mm for ceiling connector ShowerHeaven 1200/300 4jet

Features

/ packaging unit: 2 pieces
/ dimension: 230 mm

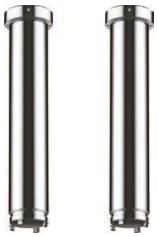

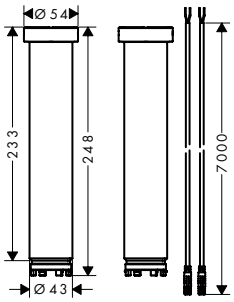

Finish	Code no.
Chrome	13603000
AXOR FinishPlus*	13603XXX

Measurements within scale drawings are in mm.
Technical specifications and units of measure are subject to change.

Basic set for overhead shower 2jet with ceiling connector

Features

/ wall-mounted
/ includes polystyrene sheathing as a placeholder during installation
/ no shortening necessary thanks to sliding sleeve
/ sound-decoupled installation
/ minimum mounting depth: 79 mm
/ maximum mounting depth: 104 mm
/ connection dimension: Rp ½
/ sealing foil permanently fixed

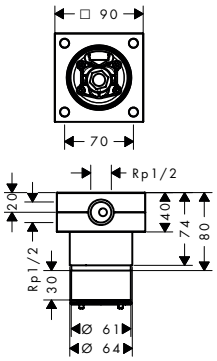

Code no.
39766180

Basic set for overhead shower with shower arm

Features

/ includes polystyrene sheathing as a placeholder during installation
/ sound-decoupled installation
/ connection dimension: Rp ½

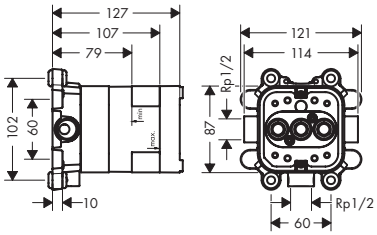

Code no.
35361180

Basic set for overhead shower 240/240 1jet with shower arm

Features

/ for installation in a direct line with no.40872000, no.40873000 the mounting plate no.10973180 is necessary
/ sound-decoupled installation
/ minimum mounting depth: 61 mm
/ maximum mounting depth: 108 mm

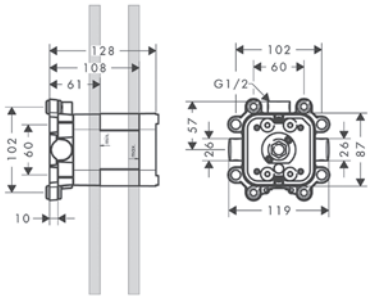

Code no.
10921180

*AXOR FinishPlus: For further AXOR FinishPlus surfaces please see the AXOR FinishPlus overview on page 44.

Basic set for LampShower 275 1jet with shower arm and overhead shower 240 2jet with shower arm

Features

/ the basic set is required in case of insufficient quality and stability of the wall structure
/ sound-decoupled installation
/ connection for power supply by empty tube
/ connection dimension: Rp ½

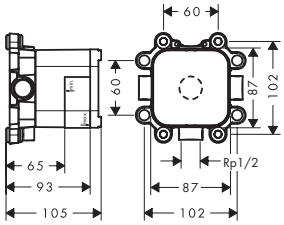

Code no.
26909180

Basic set for overhead shower ceiling

Features

/ minimum mounting depth: 60 mm
/ maximum mounting depth: 80 mm
/ connection dimension: G ½

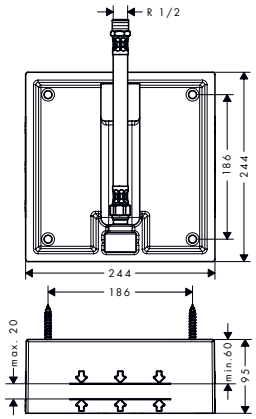

Code no.
26039180

Basic set for overhead shower ceiling

Features

/ ServiceCard with sieve and flow restrictor can be removed without tools for cleaning porpose
/ ceiling installation
/ minimum mounting depth: 60 mm
/ maximum mounting depth: 80 mm
/ connection dimension: Rp ½

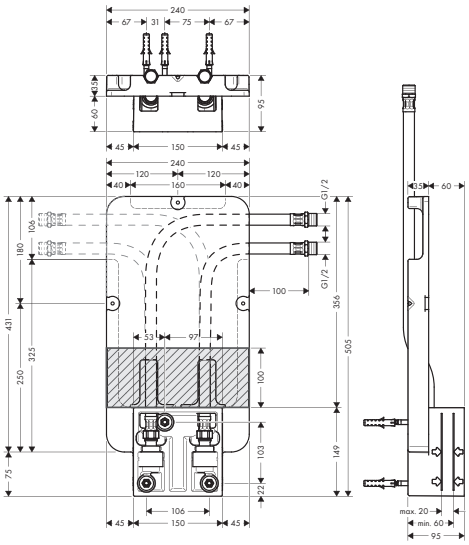

Certificates/declarations

Code no.
35363180

Measurements within scale drawings are in mm.
Technical specifications and units of measure are subject to change.

Basic set for overhead shower with ceiling connector

Features

/ ceiling installation
/ includes polystyrene sheathing as a placeholder during installation
/ minimum mounting depth: 50 mm
/ connection dimension: Rp ½

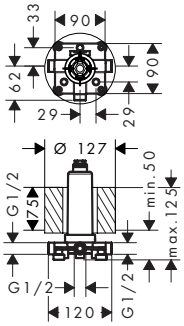

Certificates/declarations

Code no.
26434180

Extension 230 mm for ceiling connector overhead shower

Features

/ packaging unit: 1 piece
/ dimension: 230 mm

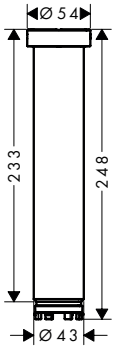

Finish	Code no.
Chrome	35288000
AXOR FinishPlus*	35288XXX

*AXOR FinishPlus: For further AXOR FinishPlus surfaces please see the AXOR FinishPlus overview on page 44.

Basic set for shower module 120/120 for concealed installation

Features

/ in a joined installation it serves as a waterconducting unit, allows dimensionally accurate positioning
/ connection right or left
/ sound-decoupled installation

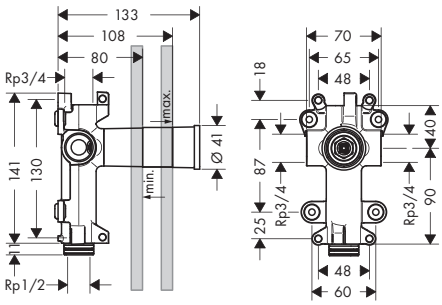

Code no.
28486180

Basic set for flood spout 240/120 for concealed installation

Features

/ connection dimension: DN20
/ in a joined installation it serves as a waterconducting unit and allows dimensionally accurate positioning

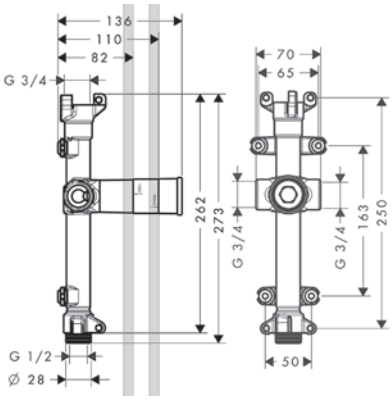

Code no.
10941180

Basic set/ waterconducting unit for shelf 240/120 for concealed installation

Features

/ in a joined installation it serves as a waterconducting unit, allows dimensionally accurate positioning. In combination with: # 40873XXX

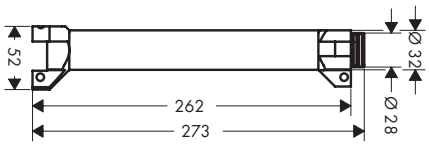

Code no.
40878180

Measurements within scale drawings are in mm.
Technical specifications and units of measure are subject to change.

Basic set/ waterconducting unit for shelf 120/120 for concealed installation

Features

/ in a joined installation it serves as a waterconducting unit, allows dimensionally accurate positioning. In combination with: no.40872000

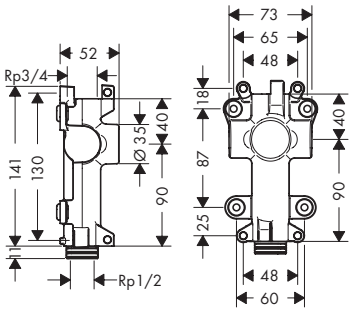

Code no.
40877180

Basic set for shower panel

Features

/ wall-mounted
/ vertical installation
/ minimum mounting depth: 106 mm
/ maximum mounting depth: 134 mm

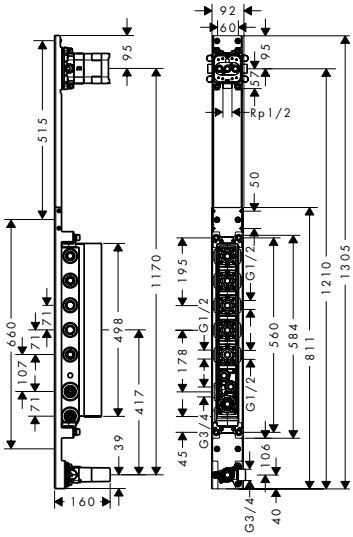

Code no.
12676180

*AXOR FinishPlus: For further AXOR FinishPlus surfaces please see the AXOR FinishPlus overview on page 44.

Basic set for Showerpipe

Features

/ suitable for AXOR One Showerpipe 48790XXX
/ connection dimension: G ½
/ sound-decoupled installation
/ minimum mounting depth: 46 mm
/ maximum mounting depth: 74 mm

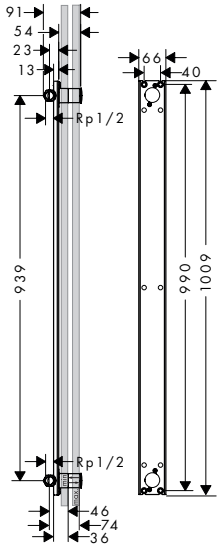

Code no.
48798180

Hose extension set for 2-hole basin mixer

Features

/ length of hoses 0,70 m
/ for free positioning of spout and handle

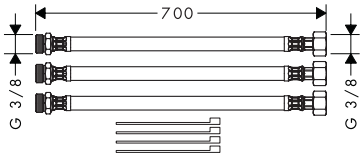

Code no.
38960000

Hose extension set for 3-hole basin mixer

Features

/ length of hoses 0,70 m
/ for free positioning of spout and handles

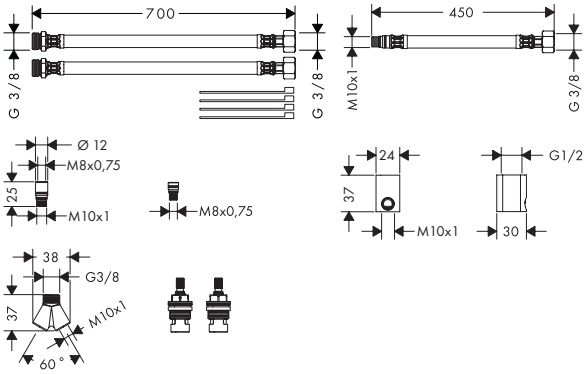

Code no.
38959000

Measurements within scale drawings are in mm.
Technical specifications and units of measure are subject to change.

Planning & Inspiration

Planning & Installation 692

AXOR Inspiration 714

AXOR Design Dictionary 726

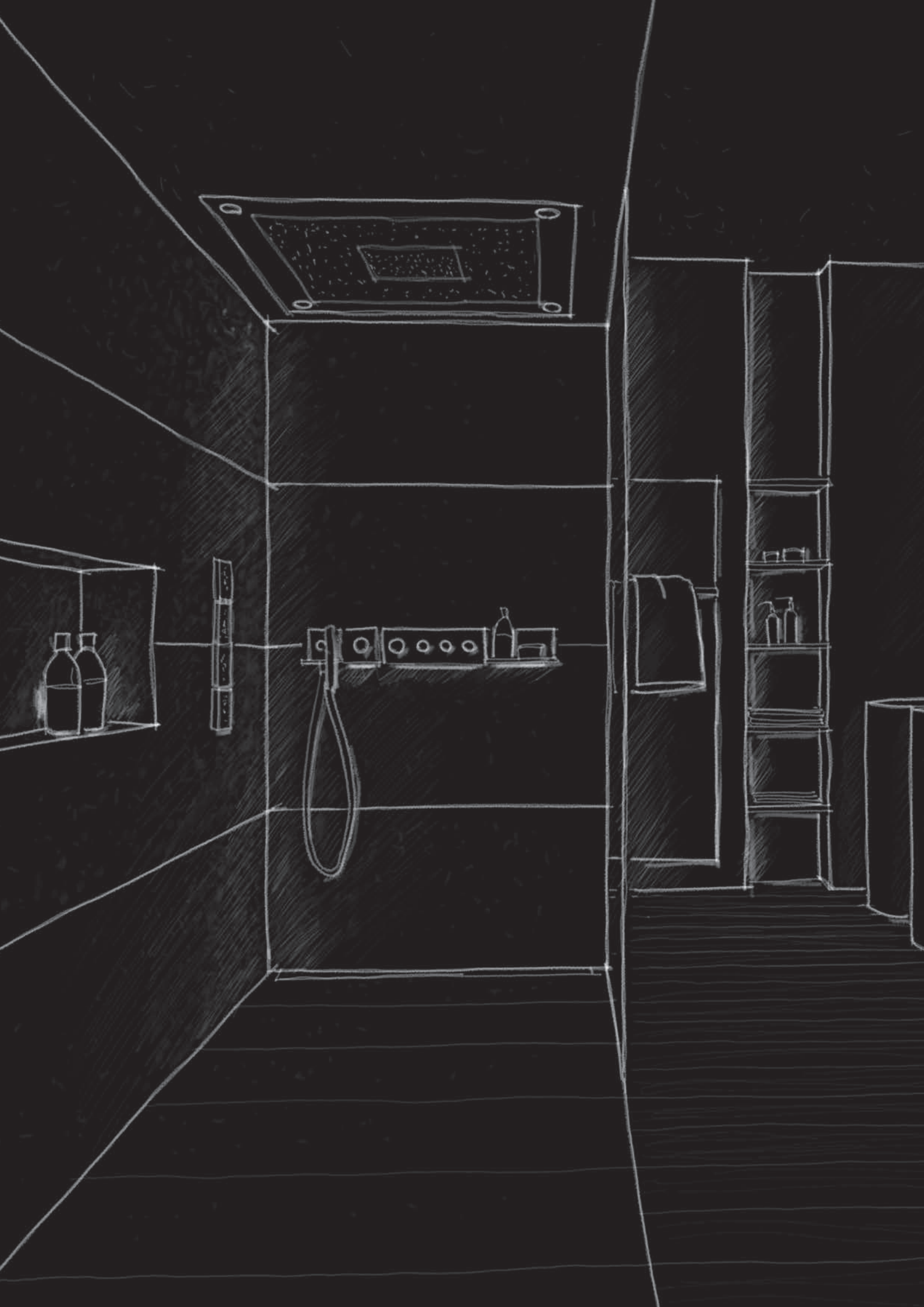

Planned down to the last detail

That AXOR continues to set new benchmarks in form and function is made clear with product innovations that are both visual statements and easy to use. AXOR follows this principle even behind walls, with installation options that are thoroughly planned down to the last detail. They are easy to carry out, thanks to AXOR iBox universal 2 or specially developed basic sets and thanks to the self-explanatory assembly instructions that come with every AXOR product.

SIX EXAMPLES FOR PLANNING AND INSTALLATION:

/ AXOR ShowerCollection: the flexible building block system for creative shower planning

/ AXOR thermostatic module Select: a luxurious way to control the shower preferences of up to five functions

/ AXOR ShowerComposition: an architectonic composition presenting novel possibilities for individual expression

/ AXOR thermostatic module Select: simple installation for up to three functions

/ AXOR One thermostatic module: great user comfort thanks to intuitive paddle operation

/ AXOR iBox universal 2: the multi-talented technology for easy concealed installation

Planning example

AXOR ShowerCollection with AXOR ShowerHeaven 970/970 3jet, with lighting:

The AXOR ShowerCollection is a flexible, building block system for creative shower planning. The corner installation offers a shower experience that surrounds you completely, above all, with the three different AXOR ShowerHeaven spray modes. Two shower modules are used as body showers. Centralized control of all shower elements is realized in the AXOR thermostatic module. The elements can be used individually or together.

- All three spray modes of the ShowerHeaven 970/970 3jet can be easily controlled with the thermostatic module 360/120
- All of the showers can be operated outside of the wet zone
- Water temperature can be set as desired before showering
- The hand shower module can be operated easily from the shower entry area, making it ideal for cleaning the shower

Products

ShowerHeaven 970/970 3jet with lighting
10623800

Thermostatic module 360/120
for concealed installation square for 3 functions
10751000

Basic set
10750180

Shut-off valve 120/120
for concealed installation square
10972000

Basic set
10971180

Hand shower module 120/120
for concealed installation square
10651000

Basic set
10650180

2x Shower module 120/120
for concealed installation square
28491000

Shelf 240/120
40873000

Basic set
40878180

Flow diagrams

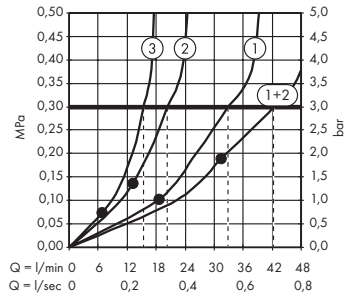

ShowerHeaven 970/970 3jet
with lighting
10623800

1 Rain

2 RainAir

3 Mono

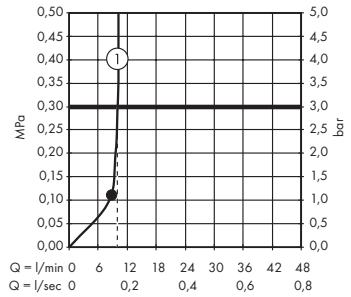

Shower module 120/120
for concealed installation square
28491000

1 Rain

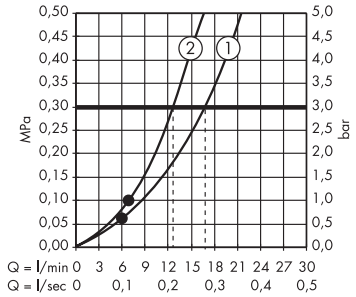

Hand shower module 120/120
for concealed installation square
10651000

1 Rain

2 RainAir

Function guaranteed starting at •. Consumption data is measured in practical use with the respective mixer/valve for concealed installation.

Dimension drawings

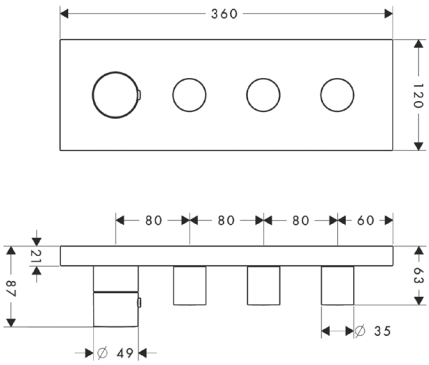

Thermostatic module 360 / 120
for concealed installation
square for 3 functions

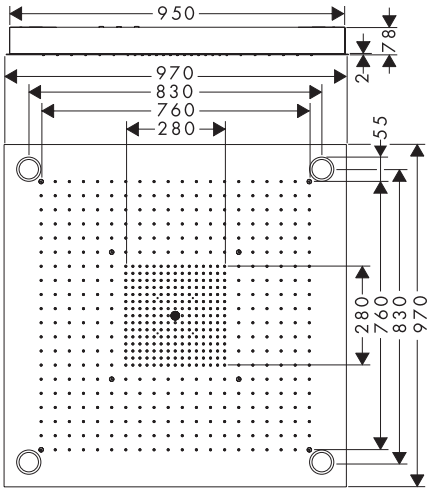

ShowerHeaven 970 / 970 3jet with lighting

Planning example

AXOR Select concealed installation 670/90 thermostat module for 5 consumers with AXOR ShowerHeaven 1200/300 4jet with 3,500 K lighting:

Luxurious operation. The thermostatic module Select has a minimalistic look and is thecentral element for controlling all spray modes and functions individually or in combination. Safe, secure and easy installation with the basic set. A perfec combination partner for AXOR ShowerHeaven 1200/300 4jet.

/ It's easy to control all four spray modes of the AXOR ShowerHeaven 1200/300 4jet with the thermostatic module Select 670/90
/ All of the important functions are brought together in one elegant, concealed thermostat: user control, temperature regulation and water flow.
/ The large Select buttons for controlling the spray modes and functions offer easy, intuitive operation
/ The hand shower is added to the thermostatic module via a porter with an integrated hose connection

Products

ShowerHeaven 1200/300 4jet with lighting 3500 K
12427000

Basic set
12922180

Thermostatic module Select 670/90 for concealed installation for 5 functions
18358000

Basic set
18313180

Baton hand shower 2jet
28532000

Metal effect shower hose 1.25 m
28282000

Flow diagrams

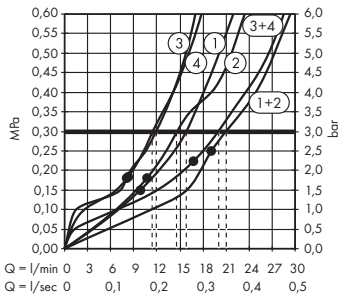

ShowerHeaven 1200/300 4jet
with lighting 2700 K
12427000

1 Rain
2 Mono
3 PowderRain, inside
4 PowderRain, outside

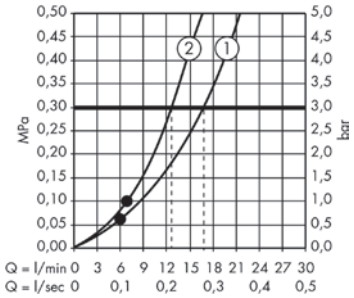

Baton hand shower 2jet
28532000

1 Rain
2 Mono

Function guaranteed starting at •. Consumption data is measured in practical use with the respective mixer/valve for concealed installation.

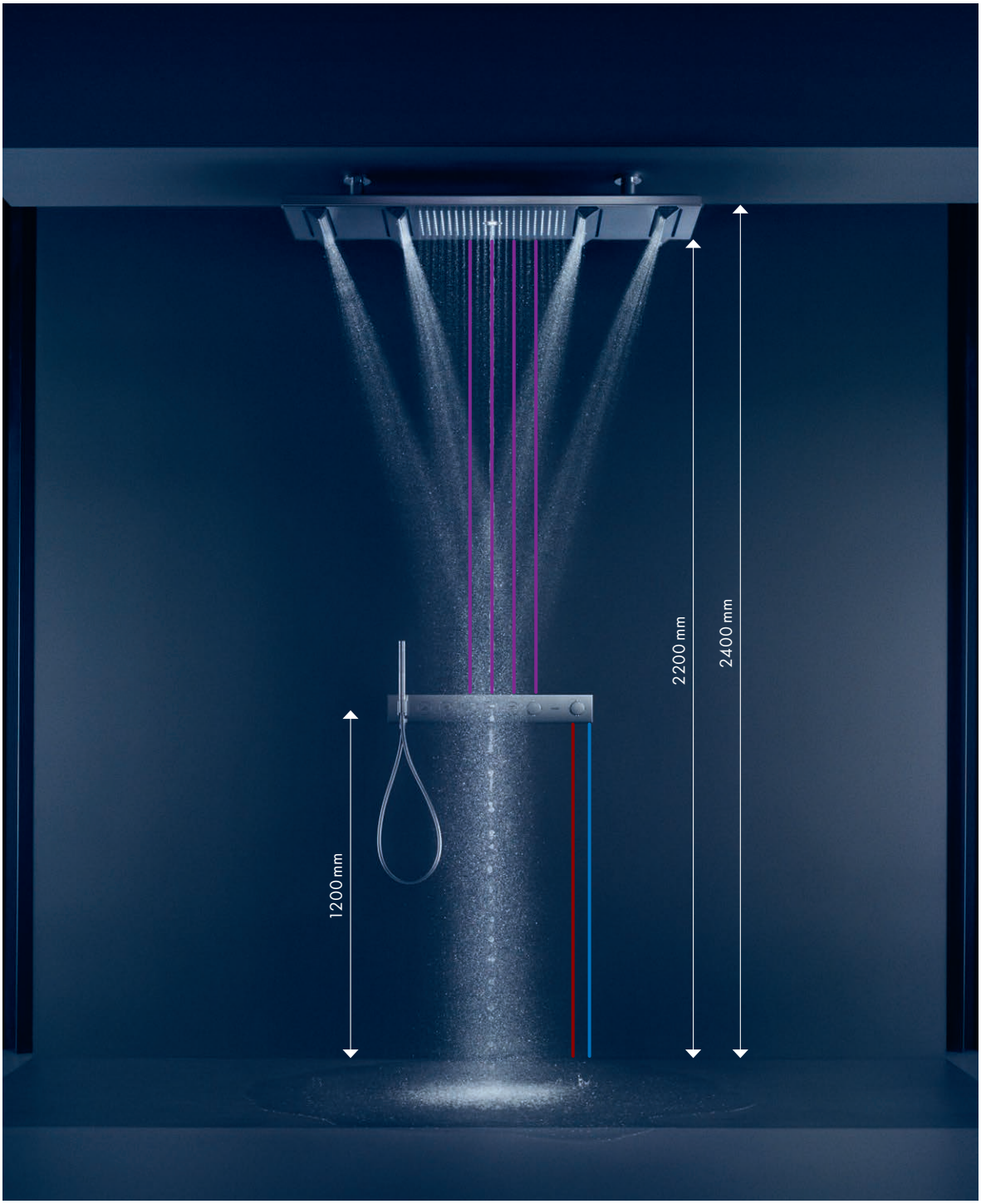

Dimension drawings

ShowerHeaven 1200/300 4jet with lighting 3500 K

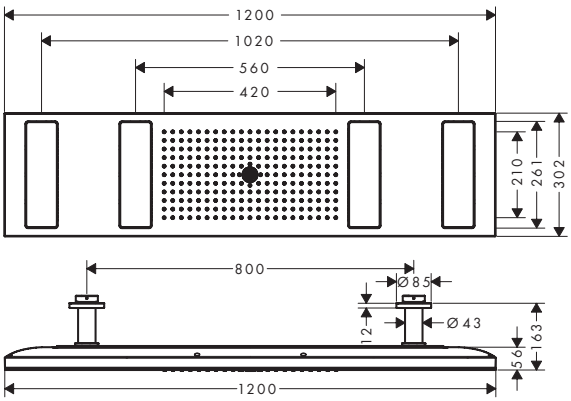

Thermostatic module Select 670/90 for concealed installation for 5 functions

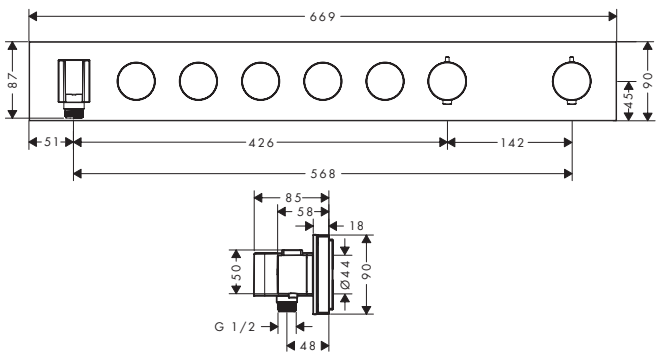

Planning example

AXOR ShowerComposition thermostatic module 610/110 for concealed installation for 4 functions with AXOR ShowerComposition shower module 110/220 1jet with shoulder shower and AXOR MyEdition bath spout

The composition of a shower module 1jet with integrated shoulder shower, a thermostatic module 610/110 for concealed installation for 4 functions with integrated baton hand shower and a separate bath spout enables a sophisticated solution for showering and bathing at the same time. For installation, one basic set is required for the shower module and one for the thermostatic module.

- It's easy to control all four spray modes of the AXOR ShowerHeaven 1200/300 4jet with the thermostatic module Select 670/90
- All of the important functions are brought together in one elegant, concealed thermostat: user control, temperature regulation and water flow.
- The large Select buttons for controlling the spray modes and functions offer easy, intuitive operation
- The hand shower is added to the thermostatic module via a porter with an integrated hose connection

Products

Shower module 110/220 1jet with shoulder shower
12593300

Basic set
35361180

Thermostatic module 610/110 for concealed installation for 4 functions
12573300

Basic set
18312180

Bath spout
47412300

Cover plate Black Walnut
47906000

Flow diagrams

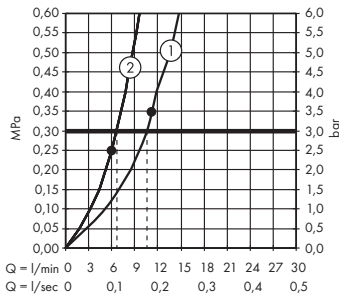

Shower module 110/220 1jet with shoulder shower
12593300

1 PowderRain

2 PowderRain

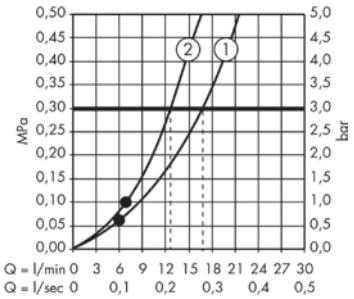

Baton hand shower 2jet
28532000

1 Rain

2 Mono

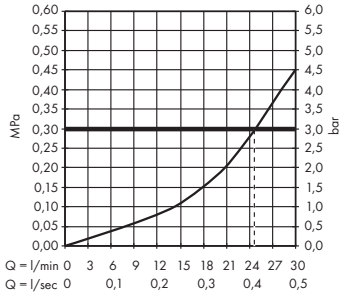

Bath spout
47412300

Function guaranteed starting at •. Consumption data is measured in practical use with the respective mixer/valve for concealed installation.

Dimension drawings

Shower module 110/220 1jet
with shoulder shower

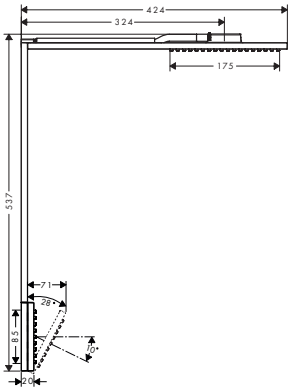

Thermostatic module 610/110 for
concealed installation for 4 functions

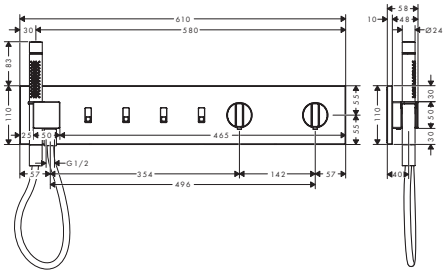

Bath spout

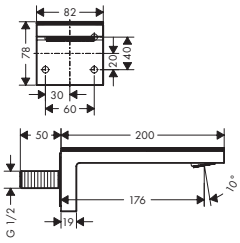

Planning example

AXOR thermostatic module Select for 3 functions with AXOR overhead shower 300/300 2jet with shower arm:

Clean design for the shower thanks to the slim form of the AXOR thermostatic module Select. Combined with the AXOR overhead shower 300/300 2jet, the innovative PowderRain and Intense PowderRain spray modes provide a highly sophisticated shower experience. The thermostat module with Select technology is used to control the spray modes. It's easy with the intuitive operation of the Select buttons. The special basic set makes it easy to install the thermostat module.

/ Central control with a thermostat: Select buttons for the spray modes, rotary knobs to regulate temperature and water flow

/ Easy to operate thanks to Select technology

Products

Overhead shower 300/300 2jet with shower arm
35318000

Basic set 2jet
35361180

Thermostatic module Select 530/90
for concealed installation for 3 functions
18356000

Basic set
18311180

Baton hand shower 2jet
28532000

Metal effect shower hose 1.25 m
28282000

Flow diagrams

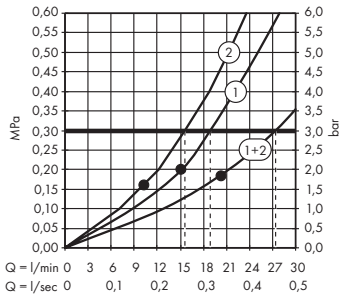

Overhead shower 300/300
2jet with shower arm
35318000

1 PowderRain

2 Intense PowderRain

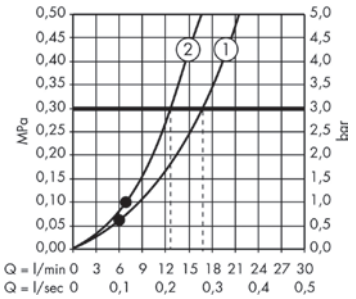

Baton hand shower 2jet
28532000

1 Rain

2 Mono

Function guaranteed starting at •. Consumption data is measured in practical use with the respective mixer/valve for concealed installation.

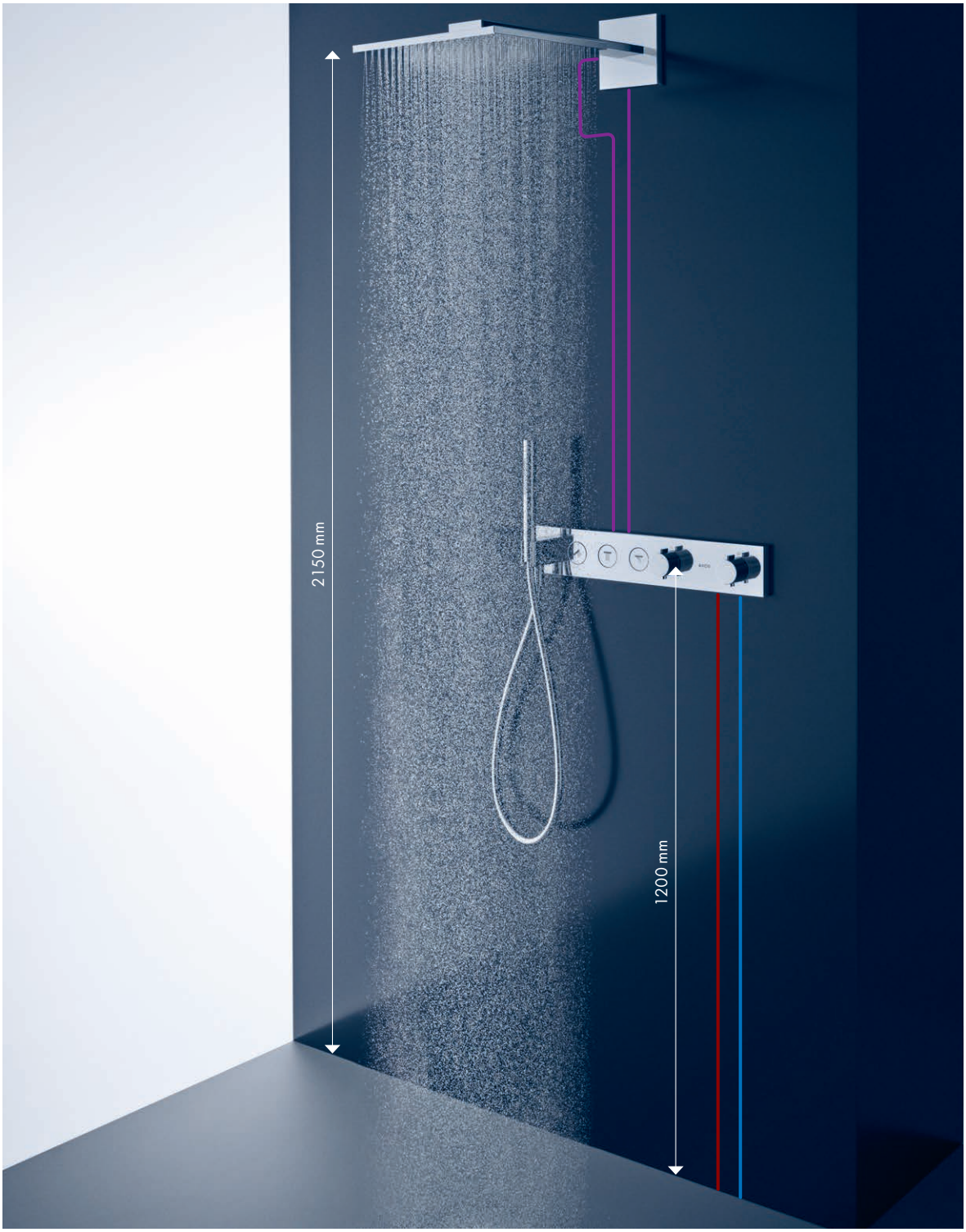

Dimension drawings

Overhead shower 300/300 2jet with shower arm

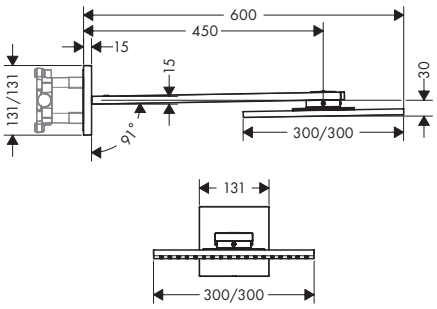

Thermostatic module Select 530/90 for concealed installation for 3 functions

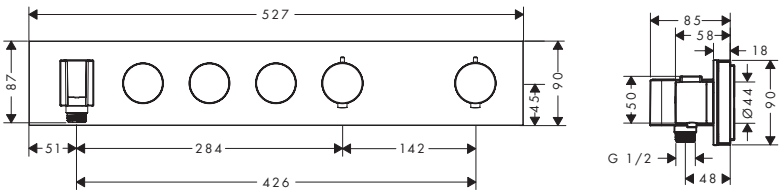

Planning example

AXOR One concealed installation thermostat module for 3 consumers, AXOR One 280 2jet overhead shower with overhead shower and 75 1jet overhead shower:

The shower scenario consisting of two overhead showers and a hand shower offers versatile use and brings the private spa idea as a central element into the bathroom. The compact, shoulder-high shower head is ideal for a quick shower without washing your hair, the wall-mounted overhead shower provides a comprehensive shower experience, and the hand shower is within easy reach. All three consumers are conveniently operated via the AXOR One thermostat; temperature and volume regulation are controlled centrally via a knob.

- All-in-one: Precise control of all consumers through one central thermostat module with Select technology
- With EcoSmart technology for reduced water and energy consumption
- Easy cleaning with QuickClean and removable overhead shower: limescale residues are easy to wipe off on the water nozzles
- Innovative combination of the Rain (outer ring) and PowderRain (inner ring) spray modes

Products

Overhead shower 280 2jet with shower arm
48492820

Basic set for overhead shower 2jet with shower arm
35361180

Overhead shower 75 1jet EcoSmart with shower arm
48490820

Thermostatic module for concealed installation for 3 outlets
45713820

Hand shower 75 1jet EcoSmart
48651820

Porter unit
45723820

Metal effect shower hose 1.25 m
28282820

Shut-off valve for concealed installation
45771820

Shelf
42844820

Flow diagrams

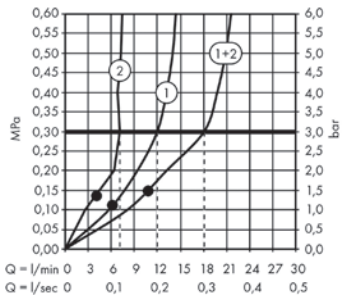

Overhead shower 280 2jet
with shower arm
48492820

1 Rain

2 PowderRain

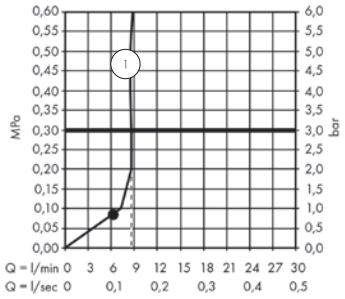

Overhead shower 75 1jet
EcoSmart with shower arm
48490820

1 PowderRain

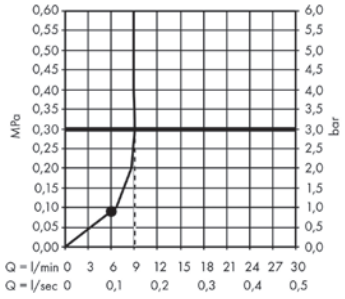

Hand shower 75 1jet EcoSmar
48651820

1 PowderRain

Ab • ist die Funktion gewährleistet. Die Verbrauchswerte wurden praxisnah mit dem dazugehörigen Mischer/Unterputzventil gemessen.

Dimension drawings

Hand shower 75 1jet EcoSmart

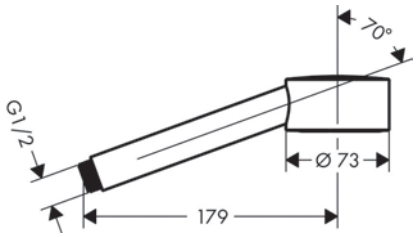

Overhead shower 280 2jet
with shower arm

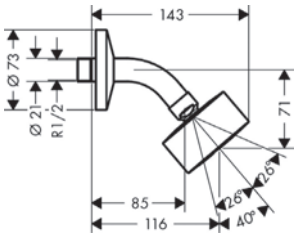

Overhead shower 75 1jet
EcoSmart with shower arm

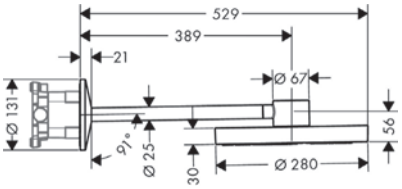

Planning example

AXOR One concealed installation thermostat module for 2 consumers and AXOR One concealed installation 280 1jet shower pipe:

The AXOR One shower pipe is the perfect all-in-one combination of overhead and hand shower, as well as wallbar and wall connection, and offers an immersive shower experience combining the Rain and PowderRain spray modes. The integration of the wall connections ensures a streamlined, tidy appearance. The thermostat module is the ideal aesthetic addition with maximum ease of use thanks to Select paddles, and temperature and volume regulation via a central handle.

- / Control of all outlets or functions through one central thermostat module
- / Parallel and intuitive operation of overhead and hand shower
- / Overhead shower with innovative combination of both Rain (outer ring) and PowderRain (inner ring), spray modes, hand shower with PowderRain
- / Reduced design by integrating the wall connection into the shower pipe
- / With pivoting shower arm for flexible direction of the overhead shower, and thus individual use of space

Products

Showerpipe 280 1jet for concealed installation
48790670

Basic set for showerpipe
48798180

Thermostatic module for concealed installation for 2 outlets
45712670

Basic set for thermostatic module
45710180

Bath towel rail 600 mm
42860670

Flow diagrams

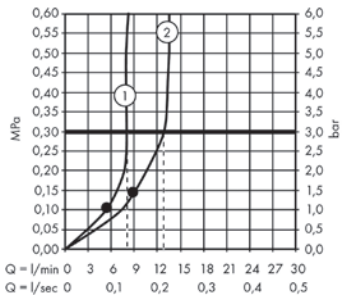

Showerpipe 280 1jet
for concealed installation
48790670

1 PowderRain

2 Rain / PowderRain

Function guaranteed starting at •. Consumption data is measured in practical use with the respective mixer / valve for concealed installation.

Dimension drawings

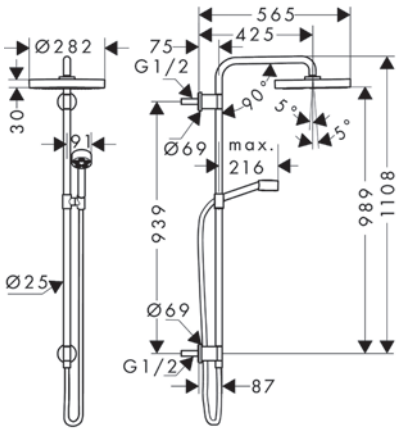

Showerpipe 280 1jet
for concealed installation

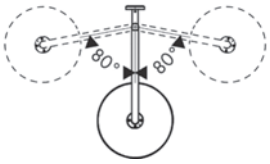

Thermostatic module for concealed installation
for 2 outlets

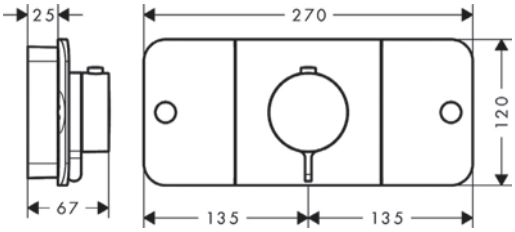

Planning example

AXOR One thermostatic module for concealed installation for 3 functions with AXOR overhead shower 250 2jet with ceiling connection:

This shower constellation consists of overhead and hand showers each with two jets. Control is easy with the three large paddles of the AXOR One control element. The AXOR One thermostatic module offers simple control and integrated temperature and water flowregulation in one rotary handle as well as control of the various functions, all in one element.

/ All-in-one: Control of all functions with a central thermostat module
/ Hand shower with two spray modes

Products

Overhead shower 250 2jet with ceiling connection
35297000

Basic set
26434180

AXOR One Thermostatic module for concealed installation for 3 functions
45713000

Basic set
45710180

AXOR One Hand shower 2jet
45720000

AXOR One Porter unit
45723000

Metal effect shower hose 1.25 m
28282000

Flow diagrams

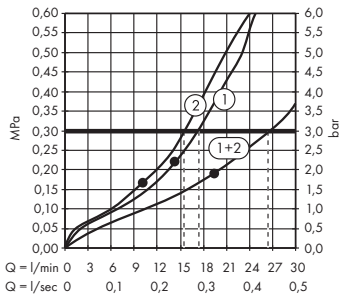

Overhead shower 250 2jet
with ceiling connection
35297000

1 PowderRain

2 Intense PowderRain

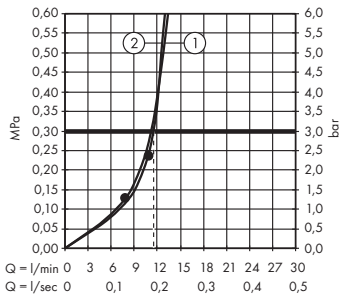

Hand shower 2jet
45720000

1 Rain

2 RainFlow

Function guaranteed starting at •. Consumption data is measured in practical use with the respective mixer/valve for concealed installation.

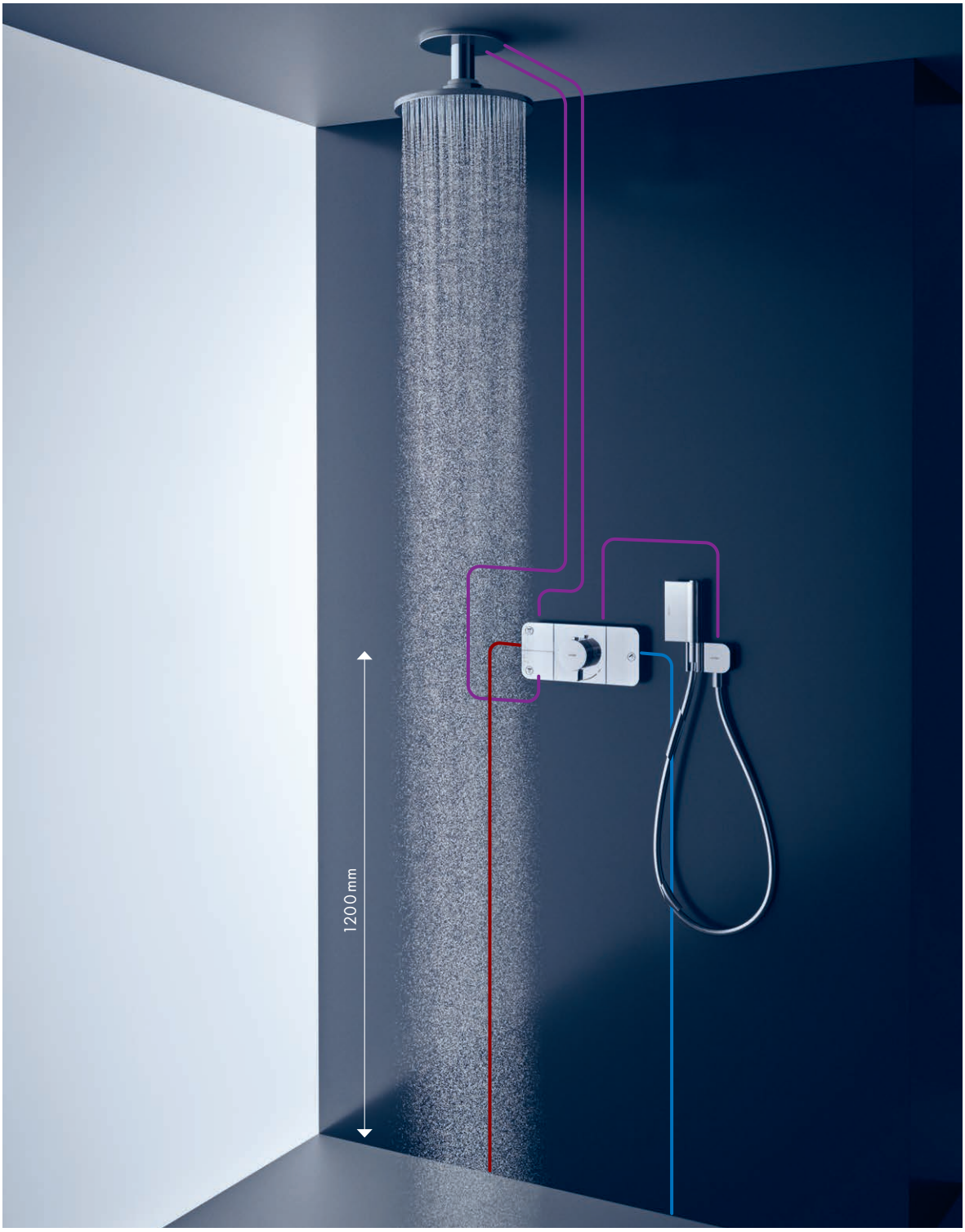

Dimension drawings

Overhead shower 250 2jet with ceiling connection

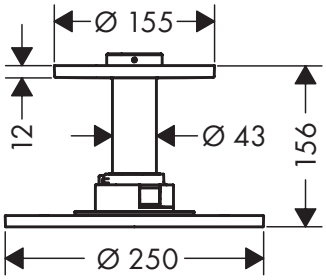

Axor One Thermostatic module for concealed installation for 3 functions

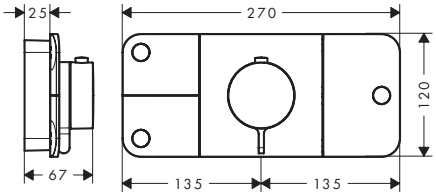

Planning example

AXOR Citterio concealed installation single-hole bath tub faucet with lever handle, AXOR 300/300 1jet overhead shower with shower arm and porter unit 120/120 with 2jet manual shower:

This shower situation consists of an overhead shower with one spray mode and a 2jet manual shower, which are conveniently controlled via the diverter in the single-lever bath tub faucet. The overhead shower with PowderRain brings relaxing, gentle showering experiences to the bathroom, while the hand shower with Rain and Mono spray modes provides refreshment and selective deceleration. The single-lever bath tub faucet with lever handle contributes to the consistent bathroom design, perfectly matching the AXOR Citterio lavatory faucets, which also feature the flat and ergonomic lever handle.

- / Using the bath tub faucet, two outlets or functions can be controlled without a thermostat solution
- / Spa experience: The PowderRain spray mode in the overhead shower gently envelops you in a cocoon of water
- / Less cleaning for the overhead shower thanks to integrated ServiceCard with dirt trap screens, jets that disappear into the spray disc after the water is turned off, and QuickClean function
- / Nice and tidy: Combination of shower support and wall connection in one porter unit

Products

Overhead shower 300/300 1jet with shower arm
35314330

Porter unit 120/120 with baton hand shower 2jet and shower hose
12626330

Single lever manual bath mixer for concealed installation with lever handle
39455330

Basic set iBox universal ½" and ¾"
01700180

Flow diagrams

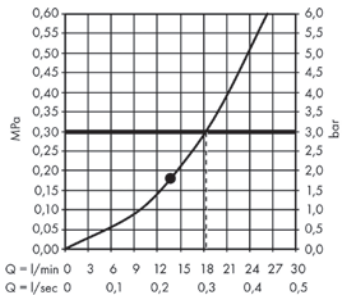

Overhead shower 300/300 1jet
with shower arm
35314330

1 PowderRain

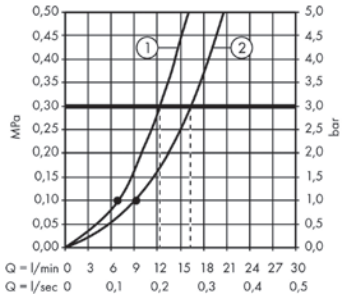

Porter unit 120/120
with baton hand shower 2jet
and shower hose
12626330

1 Rain

2 Mono

Function guaranteed starting at •. Consumption data is measured in practical use with the respective mixer/valve for concealed installation.

Dimension drawings

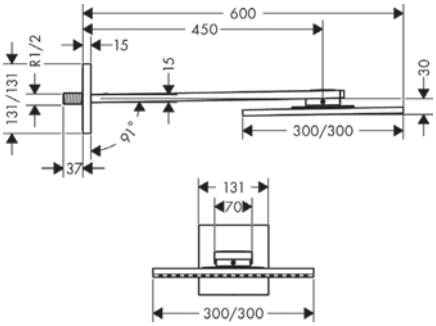

Overhead shower 300/300
1jet with shower arm

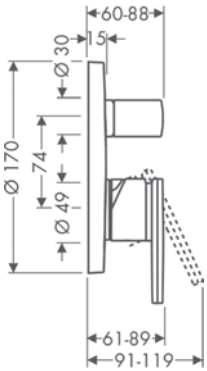

Single lever manual bath mixer for concealed installation with lever handle and integrated backflow prevention

The checklist:
We've thought of everything.

Be perfectly prepared as you start your planning and consultation conversation with your customer. The checklist helps you to address all of the important points. From room design to the water experience, water consumption and accessories to installation and technology.

1 Bathroom Design

/ Bathroom type ☐ New construction ☐ Renovation

/ Bathroom size _____

/ Style ☐ Avant-garde
☐ Modern
☐ Classic

/ Material(s) used in the bathroom _____

/ Color concept for the bathroom _____

/ Shower size _____

2 Shower planning

/ Shower form ☐ Tiled ☐ Shower tray

/ Drain ☐ Channel ☐ Trap

/ What is the ratio of tile to joint compound if walls are tiled? _____

/ Are the protected zones for electronic installations taken into account? ☐ Yes ☐ No

/ Is ceiling height sufficient? ☐ Yes ☐ No
(e.g., for overhead showers, shower pipes)

/ Placement of towel rack within reach? ☐ Yes ☐ No

/ Accessories necessary in the shower? ☐ Yes ☐ No

/ If yes: Which products? ☐ Shelves (e.g., for shampoo and shower gel)

☐ Towel rack

3 Water and control comfort

/ Is a shower pipe / shower column desired and can it be used? ☐ Yes ☐ No

/ Is an overhead shower desired and can it be used? ☐ Yes ☐ No

/ If yes: Which type of installation is desired for the overhead shower?
☐ Ceiling connection
☐ Wall connection
☐ Integrated in the ceiling

/ Which form of overhead shower is desired?
☐ Round ☐ Square
☐ Softsquare

/ How many spray modes are desired with the overhead shower? ☐ 1 ☐ 2 ☐ 3 ☐ 4

/ Which spray modes are desired with the overhead shower?

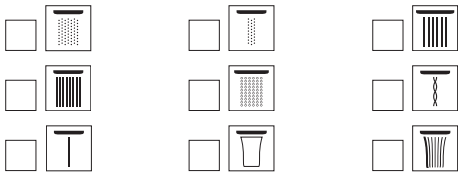

/ Is a hand shower desired? ☐ Yes ☐ No

/ If yes: How should the hand shower be attached?
☐ Wall rod with integrated shower holder
☐ Single shower holder
☐ Porter unit

/ How many spray modes are desired with the hand shower? ☐ 1 ☐ 2 ☐ 3

/ Is saving water important?

If yes: Use EcoSmart products.

☐ Yes ☐ No

/ Which type of installation is desired for the control element?
(e.g., thermostats, shut-off valves)

☐ Exposed
☐ Concealed
☐ Exposed/concealed

/ Which control concept is desired?

☐ By pressing Select buttons
☐ By rotating

/ Should it be possible to reach mixer/set water conditions without getting in contact with water?

☐ Yes ☐ No

4 Product modification

/ Is an AXOR FinishPlus surface desired for the products?

☐ Yes ☐ No

/ If yes: Which surface finish is desired?

☐ Yes ☐ No

/ Are customized product modifications by AXOR Signature required or desired?

☐ Personalized inscriptions
☐ Length modifications for products
(e.g., shortening/lengthening)
☐ Handle modifications
☐ Integration of structures
☐ Use of special materials such as wood or marble

/ Other requests or ideas:

_____

_____

_____

_____

5 Installation Planning

/ Is the required water pressure sufficient for the planned users? ☐ Yes ☐ No

/ Are the pipes the right size(s)? (inflow / outflow) ☐ Yes ☐ No

/ Is enough hot water available for the product? ☐ Yes ☐ No

/ Are the products suitable for use with a flow heater? ☐ Yes ☐ No

/ Can the handles be retrofitted? (Sturdy substructure?) ☐ Yes ☐ No

6 Notes

Inspiration

At home in luxurious bathrooms all over the world.

In demand worldwide, AXOR faucets and showers can be found in the most prestigious hotels and restaurants and most luxurious apartments, houses and villas. What unites these places is the exceedingly high standard they set for design, quality, customization and sustainability.

Villa Copenhagen, Copenhagen, Denmark

Contemporary Luxury in the Danish Capital

"AXOR WERE REALLY OPEN TO APPROACHING THIS ALMOST UNREALIZABLE THING WITH BOTH CARE AND ATTENTIVENESS. I HAVE EXTREMELY GOOD MEMORIES ABOUT THE WHOLE PROCESS OF WORKING WITH AXOR."

Olga Krukovskaya, Architect, Shamballa Jewels

As guests pass through the Neo-Baroque façade of Villa Copenhagen, they enter a world of conscious, contemporary luxury with an ambiance all its own. Villa Copenhagen features the AXOR Montreux collection within 381 of the hotel's guest rooms and suites, designed by London-based practice Universal Design Studio. The presence of bespoke AXOR Montreux basin and bathtub faucets in the hotel's eight Shamballa suites which were designed by the luxury brand of the same name deserves special mention. In the bathrooms, the Shamballa team worked closely with AXOR Signature, the customization service of AXOR, to create bejeweled handles—cast as double thunderbolts, the symbol of Shamballa—for the faucets. . The handles are inlaid with ruby and sapphire to represent hot and cold water, they express perfectly the AXOR commitment to individualization and personal luxury.

Architects: Universal Design Studios
Collection: AXOR Montreux
Surface: Brushed Black Chrome
AXOR Signature: New development

Rosewood Munich, Germany

Historic grandeur meets contemporary luxury

As guests enter the Rosewood Hotel Munich, they are immediately immersed in a vibrant celebration of Munich's past and present. Helming the careful restoration and forward-thinking interior design of the space were none other than the internationally-acclaimed designers and architects Tara Bernerd & Partners. Developed in collaboration with AXOR Signature, the customization service of AXOR, the wash basin faucets feature a stylish component mix, curated by Tara Bernerd & Partners, comprising a curved spout from the AXOR Citterio M range and custom dual cross handles from the AXOR Citterio E collection with escutcheons from AXOR Citterio. As a special minimalist accent, bespoke pin-drop temperature markings have been implemented in the center of the handles rather than on the escutcheons.

"WE DESIGNED A CONTEMPORARY TAKE ON BAROQUE ARCHITECTURE, COMBINING SYMPATHETIC DESIGN THAT MELDS WITH THE HISTORIC ELEMENTS OF THE BUILDING, TO BRING A DISTINCTLY MODERN, BAVARIAN FEEL."

Tara Bernerd, Interior designer
& founder of Tara Bernerd & Partners

Architect: Tara Bernerd & Partners
Collections: AXOR Citterio, AXOR Citterio E, AXOR Citterio M, AXOR Starck, AXOR Uno, AXOR One, AXOR ShowerHeaven
Surfaces: Brushed Gold Optic, Brushed Bronze, Chrome
AXOR Signature: New development

Arte Surfside, Miami / USA

Nuanced execution of compact luxury

Designed by Antonio Citterio Patricia Viel's multidisciplinary architecture and interior design practice, Arte Surfside's sculptural, 11-story resi-dential complex with direct access to the beach embodies a key principle of compact luxury: it provides communal amenities that enhance the resident experience while creating private living space. The residential units, meanwhile, reflect another aspect of compact luxury, which Citterio describes as "the need for personalized, private spaces that make creative use of their dimensions."

Antonio Citterio worked exclusively with AXOR products in the Arte Surfside. In the bathrooms, he chose AXOR Citterio E faucets, a collection distinguished by the elegance with which it balances opposites.

"DESIGNERS' EFFORTS SHOULD BE DIRECTED TOWARD MINIMIZING THE EFFECT OF CORRIDORS AND CIRCULATION AREAS, TO PERCEIVING THE SPACE AS IF IT WERE AS WIDE AS POSSIBLE. AND THEN TOWARD ADDING DETAILS, LIKE THE ONES WE'RE WORKING ON WITH AXOR IN THE BATHROOM, THAT GIVE A GREAT SENSE OF QUALITY."

Antonio Citterio

Architect: Antonio Citterio
Collections: AXOR Citterio, AXOR Citterio E, AXOR Starck, AXOR Universal
Surface: Brushed Bronze

ATMOSPHERE SPA by Krallerhof/ Austria

Iconic harmony down to the smallest detail

As you step into the ATMOSPHERE Spa, you are immersed in a world of absolute tranquility and relaxation. Perhaps this spa is one of the best examples of Hadi Tehrani's approach, which he describes as a completely natural process "because the design is always already there, the setting defines it, and you just have to recognize it." The shower areas and bathrooms are equipped with the minimalist faucets, monolithic showers and innovative thermostats of the AXOR One collection in Stainless Steel finish.
Hadi Teherani attributes his choice of products to the fact that they are easy to use and that they integrate perfectly into the interior design due to their design.

"ESPECIALLY IN A SPA, EVERYTHING HAS TO BE INTUITIVE TO USE. EVEN THE WAY YOU TURN THE SHOWER ON AND OFF SHOULD FEEL NATURAL. AFTER ALL, THAT ALSO HELPS MAKE THE EXPERIENCE MORE RELAXING AND REJUVENATING."

Hadi Teherani, architect & interior designer

Architect: Hadi Teherani
Collections: AXOR One
Surface: Stainless Steel Optic

Rosewood São Paulo

A reinvented historic hospital welcomes new life

A newcomer to São Paulo's luxury hotel scene, Rosewood São Paulo has already become one of the city's most exciting destinations. For the hotel's interiors, celebrated visionary Philippe Starck collaborated with a group of 57 Brazilian artists and artisans, who were commissioned by the Rosewood Group to approach the property as a once-in-a-lifetime art project. The 160 guest rooms and purchasable suites feature AXOR Starck in Brushed Bronze. In keeping with the collection's finish, Starck has developed an elegant palette for the Rosewood São Paulo bathrooms, creating an atmosphere of calm and comfort in which guests can truly relax.

"INSPIRED BY THE PRIMITIVE HAND PUMP, AXOR STARCK IS PERFECTLY IN KEEPING WITH THE HOTEL'S AESTHETIC PRINCIPLE OF BALANCING PAST AND FUTURE."

Architect: Jean Nouvel
Design direction: Philippe Starck
Collection: AXOR Starck
Surface: Brushed Bronze

The Hari, Hong Kong

A stylish retreat at the pulse of Hong Kong

Situated in the lively, bustling district of Wan Chai, the Hari embraces the vibrant style, rich color and cultural heritage of the community around it. Helming this endeavor was the acclaimed British Interior Architectural Studio, Tara Bernerd & Partners, who were responsible for the eclectic interior design of the hotel's 210 bedrooms, two restaurants, terrace bar, fitness center and lounge lobby.

With its deceptively simple layout, supple arabescato marble tiling and sun-drenched vistas, the Hari Suite's bathroom makes the perfect setting for a sophisticated interplay of AXOR designs in brilliant Brushed Bronze. At the washbasin, Tara Bernerd & Partners selected the refined urban chic of AXOR Citterio M in the form of a 3-hole faucet with lever handles. A floor-standing AXOR Urquiola thermostat makes a splash by the bath with its monolithic shape and expressive flourishes.

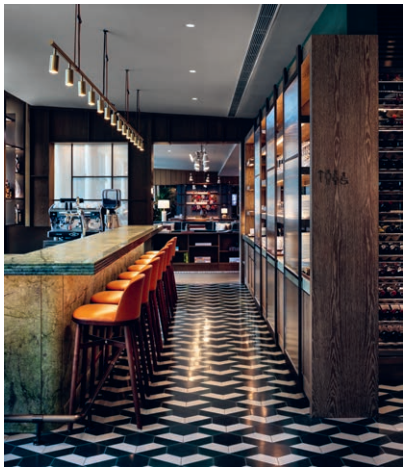

Interior architect: Tara Bernerd & Partners
Collections & Programs: AXOR Citterio M, AXOR Urquiola, AXOR ShowerSolutions, AXOR Universal Softsquare Accessories AXOR Citterio kitchen
Surfaces: Brushed Bronze

"WITH ITS REMARKABLE DESIGN, LUXURIOUS OPERATION AND REDUCED FLOW RATE, EACH AXOR FIXTURE IN THE HARI HONG KONG REFLECTS THE HOTEL'S UNIQUE COMMITMENT TO STYLE, COMFORT AND SUSTAINABILIT."

Volta Gallery Lofts By Endover, Talinn/ Estonia

An iconic factory is transformed into a hub of contemporary living

Set within the walls of a historic factory building in Tallinn, Estonia, the Volta Gallery Lofts pay homage to the industrial architecture of the past while embracing the best in modern urban living. Designed by acclaimed Estonian real-estate developer Endover in collaboration with Apex Architects, these exclusive townhouses represent a "striking blend of preservation and transformation", their distinctiveness enhanced by the choice of AXOR for the bathrooms. With their brilliant Chrome finish, the reduced, rectilinear forms of an AXOR ShowerSolutions thermostat at the bathtub and an AXOR ShowerSelect mixer in the shower delight the eye while providing a welcome contrast to the otherwise muted tones. At the sink, AXOR Uno faucets, also in classic Chrome, sit atop a double vanity.

THE FAUCETS ARE "SILENT YET POTENT STORYTELLERS, BRIDGING THE GAP BETWEEN THE HISTORIC FABRIC OF THE BUILDING AND ITS MODERN-DAY TRANSFORMATION."

Maarja-Linda Taur, team lead Endover

Architects: Endover in collaboration with Apex Architects
Collections & Programs: AXOR Uno, AXOR ShowerSelect, AXOR ShowerSolutions
Surface: Chrome

ÖÖD Golden House, Estinoa

A luxurious retreat that you can take anywhere

"CELEBRATED FOR ITS ELEMENTAL DESIGN, OUTSTANDING PERFORMANCE AND SUSTAINABLE TECHNOLOGIES, THE AXOR ONE COLLECTION BY BARBER OSGERBY UNDERSCORES THIS PROJECT'S COMMITMENT TO LUXURY, COMFORT AND SUSTAINABILITY AT ONCE."

Created by Estonia-based studio ÖÖD House as a way to "put a five-star hotel room in the middle of nature", this unique dwelling is prefabricated in a limited run of 79 units that can be installed in nature-steeped sites worldwide.

A simple yet well-equipped kitchen catches the eye with its vibrant arrangement of honey-veined marble, red satin cabinets and an AXOR Citterio M faucet 220 in Brushed Brass.

The bathroom follows suit with an intricate blend of dark stone tiling, golden trimmings and products from the AXOR One range also in Brushed Brass. Situated over a free-standing washbasin by the window, an AXOR One 140 basin faucet with innovative, water-saving Select technology presents the ideal conditions for a meditative wash. By the shower, an AXOR One arrangement comprising an Overhead 280 2jet shower, thermostatic module and 1jet EcoSmart hand-held shower[1)] offers a sensuous and soothing shower experience.

[1)] compared to our conventional products, the flexible flow limiter caps the water consumption to max 8l/min (at 3 bar).

Architects: ÖÖD House
Collections: AXOR One, AXOR Citterio M kitchen
Surface: Brushed Brass

BVLGARI Hotel Tokyo/ Japan

A new chapter in the Bulgari saga

"OUR FOCUS WAS TO REVEAL THE MORE FEMININE DIMENSION OF THE JAPANESE CULTURE, WITH THE USE OF DELICATE AND REFINED DETAILS, MINGLED WITH ITALIAN STYLE."

Opened in 2023, the Bulgari Hotel Tokyo is the latest gem in the luxury brand's distinguished hotel collection, bringing Bulgari's signature Italian elegance to the heart of Japan's capital. As with all Bulgari hotels, world-renowned ACPV ARCHITECTS Antonio Citterio Patricia Viel were tasked with bringing to life the jeweler's vision of contemporary design, craftsmanship and meticulous detail within the hotel's 98 rooms and public spaces.

Naturally, ACPV ARCHITECTS chose Antonio Citterio's iconic AXOR Citterio collection for each bathroom. Its elegant forms adorn the sink as a 3-hole basin mixer and the bath as a 4-hole bath mixer with a hand shower baton, and, in their classic Chrome finish, perfectly complement the bathrooms' refined black granite surfaces.

Architect: ACPV ARCHITECTS Antonio Citterio Patricia Viel
Collections: AXOR Citterio
Surface: Chrome

Chouchou Hotel, Paris /France

Cosmopolitan flare and modern refinement in the 'City of Light'

Named after a French term of endearment, the Chouchou Hotel presents a warm-hearted, vivid homage to Paris for guests and locals alike. Parisian-native interior architect Michael Malapert envisioned among others 63 rooms, and everywhere one finds delightful references to French craftsmanship, design and culture.

Amid the glowing atmosphere of metropolitan elegance, it should come as no surprise to find the AXOR ShowerHeaven and AXOR Citterio M collection in the hotel's bath-rooms, encased in a resplendent Brushed Bronze finish. The reduced, slender forms of these two collections, and the understated presence help transform the Chouchou Hotel into a safe haven from the vibrant streets beyond.

AXOR FINISHPLUS SURFACES, FURTHER ELEVATES THE AXOR PRODUCTS, CREATING STRIKING ACCENTS AGAINST THE HOTEL'S CALMING PALETTE OF BLUE AND WHITE TONES.

Architect: Michael Malapert
Collections: AXOR Citterio M, AXOR Starck, AXOR ShowerHeaven
Surface: Brushed Bronze

Preface

—

Modern bathrooms are more than a simple summary of planning and installation of tabs, showers and matching piping systems. Today, the room—which was for a long time a purely functional wet cell and neglected in terms of design—became a place of wellbeing, relaxation and regeneration. Besides the upgrade in both functional and product aspects, the bathroom developed over the last years more and more into a reflection of individual (composition) requests and (design) preferences. Along with this development, sales persons and planners are confronted with new demands. They need to advise discerning customers not only in terms of the right product choice but also in regards to the aesthetic impact of a bathroom.

This design lexicon serves both consultants and enthusiasts as a reference guide for design. However, it is not a claim to completeness—but as a competent basis for a professional dialogue it explains the different expressions in the areas of architecture, design and of the different AXOR collections.

ACCESSORIES

Borrowed from the French and used mostly in the plural, this collective term describes additional/decorative and/or functional equipment (from French "accessoires"). "Accessory" actually describes a not-necessary-but-adapted-to-the-fashion style, arrangement or image composition additional by-product. Accessories are used primarily in fashion design to set accents that are highly trend-dependent. In interior design, accessories such as textiles, decorative items, pictures, candles, vases and, in the bathroom, additional functional (soap) dishes, towels, mirrors or purely decorative design elements for the wall are used to achieve consistency of a design concept or look (compare: AXOR Accessories).

AESTHETICS / AESTHETIC

Aesthetics is the theory of the sensual perception (from Greek "aesthesis" = perception). Therefore, it doesn't mean beautiful by itself, but the doctrine of regularity and basics of the beautiful (harmony), as can be perceived in nature or art. Additionally, it analyzes whether the aesthetic features can be seen as objectively given or if beauty is in the eye of the beholder. This approach focuses less on personal taste than on the generally human or generally societal perception of what is considered as beautifully (compare: Golden Ratio). In everyday speech, the term is often used as a synonym for beautiful, balanced, tasteful, appealing. In the true sense of the word, however, "aesthetic" describes all the characteristics which we experience with our senses and which determine how we perceive our environment and objects—particularly whether we perceive them as beautiful or ugly. Balanced proportions, regular or layered forms and harmonious color combinations are often considered particularly aesthetic, beautiful and pleasant. How we perceive beauty may be partly rooted in biology, but it is also acquired culturally and sociologically (as defined by our personal environment). The same number of factors determine whether we perceive a design as being aesthetic or aesthetically convincing or not. In some cultures, clean and harmoniously proportioned shapes are considered beautiful while in other cultures however beauty means rich ornamentation.

AMBIENCE

The term ambience (from Latin "ambio" = surrounded or enclosed) means "surrounding environment" or "setting" in the sense of a special atmosphere exuded by a decór, a space or a piece of art. In interior design, ambience is achieved through a targeted aesthetic presentation and stands for the atmosphere created by a space.

ARCHETYPE

The term "archetype" comes originally from psychology or philosophy and—referring to psychologist C. G. Jung—indicates the primal image of being or original images, which are the compositions of (pre) human fundamental experiences and, all in all, represent the basis of the personality structure. An archetype (from Greek "arche" = beginning, and "typos" = imprint; meaning original model, mold) can be a shape that is embedded in our cultural memory and which is an example of or a symbol for a specific function. For many of us, a house still has a rectangular ground plan and a gabled roof, even though a variety of other house types exist today. Philippe Starck employed a bucket of water as an archetype. The water pump served him as an original model for the faucets of the AXOR Starck Collection. In product design, archetypes are forms that establish or embody a new product class. For example, cross handles represent the handles of a faucet (compare: AXOR Montreux), the Porsche 911 represents the sports car, Mart Stam's "S34" steel-tube chair (1926) represents the cantilever chair, etc.

ARCHITECTURE / ARCHITECTONICS / ARCHITECTONIC

Architecture (from Greek "arché" = beginning, origin, base, the first, and "téchne" = art, handcraft) describes the crafted occupation and aesthetic examination of humans with the built space. Architecture is one of the oldest art forms of human civilization. Today, the lines between functional buildings and architecture are blurred: Department stores, concert halls, churches and apartments are regarded equally worthy of the design process. The connection between architecture and geometry is as old as architecture itself. The concept of architecture as both shell and constructive framework, and the idea of axiality (alignment with the axes), find their source in Roman antiquity. These principles have been continually refined and are today expressed through modern construction materials such as steel framing, concrete, glass etc. Space is designed in terms of dimension, proportion, form and composition. The term "architectural" covers anything that creates a space and cannot be dissociated from it—both in terms of construction and design. In product design, architectural composition is based mostly on geometric (basic) shapes. Straight, non-expressive, purist

forms, without superfluous elements and avoiding all unnecessary technical-appearing style, is perceived as architectural. These objects appear as architectural, structural elements that are weight-bearing, functional and adjusted to the room. Such objects are often connected to the wall or the floor and/or provide structure to the room. They usually are not decorative but simply draw attention to the essentials (compare: AXOR Edge). The term "architectonics" is often used synonymously but can describe—to differentiate it from "architecture"—a structure, order or system. It may be used in regards to not only to the art of building but also to the human body or even to a poem.

ASYMMETRY / ASYMMETRIC

"Asymmetry" describes the missing of symmetry or an inequality. It is only used in those areas when there is also a symmetry (symmetry/symmetric). The adjective describes the non-symmetrical or unequally balanced elements in a composition. This manifests itself in an optical or even a structural imbalance in constructed objects or products. Some artists intentionally choose an asymmetric composition to create tension (compare: AXOR Urquiola). In deconstructionism, asymmetrical constructions are aimed at confusing the beholders' sense of balance and their perception of harmony by using technical illusions.

AUTHENTICITY / AUTHENTIC

"Authenticity" (from Greek "authentikós" = genuineness, reliability, credibility) means originality. An authentic object is always an original or a product identical to the original (as in serial production). In the figurative sense, a form or an attitude can be described as authentic (as opposed to cursory, superficial, ostensible) even though it might not characterize the original, as long as it carries its original quality and its true identity. Content can be considered as authentic when both aspects of perception—the instant semblance and the actual existence—are found to be in accordance. A form or a re-design is considered authentic when it is used or designed in the sense of the original (compare: AXOR Montreux).

AVANT-GARDE / AVANT-GARDIST

In the broadest sense, avant-garde (from French: "l'avant-garde" = front guard) assigns a leading or pioneering role. Avant-gardists are people who start new, pathbreaking developments. In contrast to a trendsetter, who starts only short-term styles, changes started by avant-gardists have a more basic and long-term effect. The term "avant-gardist" therefore doesn't describe one particular style, but rather an artistic or intellectual attitude. With respect to art history, the term "avant-garde" describes artists whose ideas and works are ahead of their time. In the history of visual art, stands for a new art movement of the (early) 20th century. The term is closely connected to modernity. The original aim of all avant-gardist movements (mostly elitist, perceiving themselves as forerunners) was always a change in society. Most avant-gardist movements in art emerged at the beginning of the 20th century from artists' communities sharing an idealistic belief in progress—such as Italian futurism, Russian constructivism, De Stijl (Holland) or German Bauhaus. All such movements reject the prevailing aesthetic norms of their time. Today, "avant-gardist" generally means a demonstratively modern artistic expression aimed to provoke and consequently to promote a new aesthetic or social ideal. Even if this ideal can't be realized, avant-gardist movements often have a significant influence on prevailing trends in fashion, art and design of their time.

AXOR FINISHPLUS

AXOR term for (color) finishes. AXOR FinishPlus finishes are characterized by their exceptional brilliance, high durability and exclusiveness. Customers can choose from a large variety of standardized finishes such as Brushed Redgold, Polished Black Chrome or Polished Gold Optic. Therefore, AXOR FinishPlus finishes contribute significantly to the possibilities for personalization of the bathroom (compare: Individualization). The finishes are particularly resistant and much harder than a galvanized fixture. They also have an excellent color brilliance since they receive through the Physical Vapor Deposition (PVD) process an additional metal layer.

AXOR SIGNATURE

A service from AXOR that realizes individual demands such as lengthening, shortening or individual marking/labelling of AXOR mixers, showers and accessories. AXOR Signature plays an important role within the AXOR individualization philosophy since the service turns a bathroom product into a unique piece that fulfills the exclusive aesthetic taste of the customers (with own logo or emblem) or that is adapted to meet requirements that are based on special spatial conditions (longer shower arm for an extra-high ceiling) (compare: Individualization).

BELLE ÉPOQUE

This is the period of time around the turn of the 19th to the 20th century. It lasted about 30 years generally in Europe and affected especially the life in metropolises such as London, Paris and Vienna. A new cultural life started in cafes, lounges and theatres of the European core countries because of economic and technical progress, which affected also art, fashion, architecture and technology. This new era of freedom was also characterized by optimism and the new possibilities that technical improvements generated. Cabarets served as stages for writers, artists and actors; Parisian bohemians met in night clubs and variety theatres like the famous Chat Noir or Moulin Rouge in Paris. A parallel development took place in fine arts. During the time of Belle Époque, impressionism led to Jugendstil (Art Nouveau) and to Cubism. The most important representatives were Paul Cézanne, Gustav Klimt or Pablo Picasso. In architecture, a separation from historicism occurred; the builders first preferred Jugendstil and then turned over to the New Objectiveness, which started in the early 1920´s. The most important representative of Jugendstil in architecture was Paul Möbius. (compare: Jugendstil).

CLASSIC (DESIGN CLASSIC)

The adjective classic describes a design which is typical for its time, but at the same time so perfect and pure that it seems timeless. Classic designs are considered harmonious and complete—regardless of the associated epoch or art form. Therefore, classic is defined as timeless, in contrast to the circumstantial nature of fashion. Classic works can be found in music, architecture, fashion, art, design, literature and all other areas. Colloquially, the term classic is used today as a synonym for typical/original. Classics are considered to be perfect in form and pattern formation, making them likely to be imitated. Neither unique in form nor the first of their kind, these imitations can never reach the quality of the original. In design, a classic is the closest to a formal ideal, the basic idea, even if it is not as functionally perfect as its successors. Ray and Charles Eames's Lounge Chair is considered a modern design classic, while the iPod is presently called a classic. In bathroom design, the 1994 AXOR Starck collection is a design classic—primarily because the faucet, with its joystick handle and minimalistic design, was revolutionary in terms of operation and form. In

visual arts and applied arts as well as in architecture, the Classic Modern Style includes artists and works of the period between the two world wars. The Bauhaus is one of the most important examples of this style.

CONCEPT / CONCEPTUAL

A concept (from Latin "conceptum" = the combined) is a plan, an idea for a project which can have artistic or creative value, even before its material realization. A concept advances the idea and incorporates many factors which play a role in the realization, success and the impact on, for example, a new product. The design constitutes the last stage of a concept. The concept is still recognizable in the completed product as the underlying formal and functional idea. In design, the quality of the concept is determined by how long-lasting the design is and how well the product functions. However, concept design, inspired in the seventies by concept art, concerns intellectual debate about the object, as opposed to its practical value for provoking a reaction from the user. Elements of concept design can be found in Radical Design and Antidesign, employed by Italian groups like Alchimia and Gaetano Pesceand in the New German Design (compare: New Design). Awards such as the Red Dot Award: Design Concept illustrate how valuable concepts are—even before their realization—evaluating and acknowledging new design concepts, innovations and prototypes believed to be the precursors of tomorrow's important products. AXOR information: With WaterDream, AXOR has established a format through which conceptual potential can be achieved without compromising design creativity (similar to concept cars of the automobile industry). Space, water and humans are the only parameters for the international architects and designers. With no constraints related to market conditions, radical freedom and thinking emerges about product design and bathrooms. Many of the AXOR WaterDreams (established in 2000) turned into visionary products for the bathroom, such as the AXOR Massaud collection, the AXOR shower products designed by Front, or the AXOR LampShower designed by Nendo, which is itself is a new interpretation of the interaction between light and water.

CULTURE / CULTURAL

In our society, we use the word cultural (from Latin "cultura" = development, cultivation, processing) to describe institutions and activities such as the theatre, music, visual arts, literature, but also education and research. However, these are only the most visible expressions of a culture, which develops within a community and which is determined by a range of factors like language, politics, law, family structures, social values, religion and social conventions, education, communication skills, consumer habits, housing and health care, social behavior and responsible attitude towards individuals, society and the environment. The complex phenomenon of cultural identity within Europe is closely connected with the concept of civilization (as a theoretical counterpoint to the state of nature, instinctive behavior and the abuse of power). This led to a new image of state and society in the context of the Enlightenment in the 18th century. Culture can also be understood as a concept which works on both a large and a small scale. It is not only individuals who develop their own culture, but also every community—on the basis of familial, societal and religious structures. An individual might express their cultural identity through appearance, bodily care, or style of living. In larger structures, this identity presents itself as a subculture. In companies, concepts of morality, history, brand-specific standards of quality and sustainability, as well as socially responsible behavior all result in a culture which contributes to the formation of a specific identity (compare: Corporate Identity).

DESIGN

Design has two principal meanings: design in the sense of a process (a drawing, an idea or a creative concept) and design in the sense of an outcome (the appearance of the created object, as well as the international language of larger structures, such as those encountered in interior design and architecture). The word design (from Latin "designare" = to signify) has been introduced into many different languages. Following its emergence in craftwork, design has since flourished in numerous other fields. The most important are product design (e.g. furniture and household objects), industrial design (a term largely applied to the design of industrially manufactured products in contrast to craftwork, but is sometimes used to describe specialized machines for industrial production), interior design (special art), graphic design (means of visual communication such as typography, prints, marketing materials), corporate design (establishment of an homogeneous visual appearance), communication design, packaging design, fashion and textile design, color design, etc. Design encompasses not only the visual or aesthetic presentation of an object or a communication medium, but also its functionality and construction. The tasks of a designer include product conceptualization, selecting and processing materials and choosing the production technique. Design influences ergonomics and the usability of everyday equipment and devices, and understanding the emotional component of a design has become crucial in today's word. A well-designed product performs optimally, clearly conveys its function and is a pleasure to use both in the short and the long term.

DIAMOND CUT

Within gemology, cutting is a process which intensifies the shine of a gem by bringing out the optical effects which are already inside the stone. The cut of a diamond decides upon its brilliance. Cutting is part of the 4Cs (Color, Clarity, Cut, Carat) and is the most remarkable of these four criteria. The higher the quality of a cut, the more the stone shines. Only the perfect cut can bring out the unique fire of a diamond. There are around 1500 types of diamond cuts. The brilliant cut is considered the best-known cut, which is composed of small, polished surfaces. These surfaces, or facet (from French "facette" = bevel; partially polished, flat surface) cuts are used for other gemstones, mirrors and glass, and even to create special forms. AXOR information: For AXOR Edge, the diamond cut describes the partially refined surface structures of the faucet. To achieve this texturing, a unique 3D structure is milled into the brass block at the handle or the lower part of the faucet. This structure is created using a diamond-tipped tool, the same one used when cutting diamonds. After that, the block is chrome-plated or refined with one of the AXOR FinishPlus finishes. The entire process creates a surface texture that is a special part of the faucet, standing in the Art Décoratifs cultural tradition.

DISCREET

The term (from Latin "decentia" = decency/civility) is a synonym for sensitive or befit. In aesthetics, this term means unobtrusive and restrained, describing the subtlety of a design element or an entire composition, in which no singular element dominates.

DYNAMICS / DYNAMIC

Dynamics (from Greek "dynamiké" = powerful or "dynamis" = power) refers to the movement of bodies under the influence of a force. The term dynamic usually describes the character of a person, an environment or an object and means that someone or something is full of energy, agile and light. It is often used to describe the character of a person, an environment

or an object. Dynamic therefore signifies the opposite of static. However, dynamics can also mean the inner movement of a piece of art, a design object, a building or a room design. A sense of dynamism or movement can be achieved through deliberate nuances, rhythms or organic, sweeping lines.

ECLECTICISM / ECLECTIC

Eclecticism (from Greek "eklektos" = selected) is a design principle which draws upon different objects, styles, materials, elements or philosophies and combines them to create something new. As an artistic movement and design principle which openly draws upon existing or historic works of art, eclecticism has significantly shaped human creativity for centuries. It also characterizes different periods of European art from historicism onwards. The term eclecticism was used pejoratively in the past, applied to any art that lacked originality. In postmodernism, eclecticism as an art method became important for critical reflection on existing material. In design, the eclectic principle represents a technique to edit or reinterpret (art) quotations, or to create or reinterpret an original (creative and innovative) formal experience. This way, something new arises from established objects. Often, the result is a combination of references and symbols from the worlds of design and architecture (compare: AXOR Urquiola).

ELEGANCE / ELEGANT

Elegance (from Latin "elegantia" = fine taste or fineness) is associated with a sophisticated, stylish taste which has a distinctive and cultured appearance. People who dress elegantly and furnish their home in an elegant style wish to express a refined, cultivated sense of taste. The elements employed are mostly classical and harmonious, with bold or ornate elements often avoided.

ERGONOMICS / ERGONOMIC

Ergonomic is mostly used as a synonym for anatomically designed or optimal for human use. Ergonomics (from ancient Greek "ergon" = work and "nomos" = rule, law) is concerned with designing a work space that is efficient and gentle on the body. Ergonomic design aims to improve the interaction of man and machine and to create products that are easier to handle and more comfortable to use.

EXTRAVAGANT

The term extravagant means "in an eccentric or exaggerated, overstretched manner purposely different and therefore notable/exceptional". Previously used in a negative sense , extravagant today describes any creation in product design, architecture or interior design that is exceptional, new and unusual, partly futuristic, often made with the purpose to polarize.

FORMAL EXPRESSION

Formal expression describes the way in which an object or a room achieves a certain expression by means of its formal elements. Rooms and objects express themselves in their arrangement and via metaphorical references—for example a handle in the shape of a leaf. The term formal expression is in line with the idea that individual design elements (basic shapes, lines, colors, etc.) can achieve a certain expression through their arrangement—just like the words in a language. An object can therefore be soft or aggressive, expressive or concentrated, discreet or dominant, minimalist or sculptural.

FROG DESIGN

Frog Design is one of the most well-known international design studios. The company was founded under the name "Esslinger Design" in 1969 by Hartmut Esslinger. Working from Altensteig within the Black Forest, Esslinger worked with with Georg Spreng and Andreas Haug to create the Tri-Bel hand shower, for which Hansgrohe received its first design award in 1974. The studio had its international breakthrough at the beginning of the 1980s, receiving global recognition for its work, particularly the legendary Apple IIc and Apple Macintosh designs. During this decade, the company changed its name to Frog Design and relocated to Silicon Valley. The acronym FROG is an abbreviation for "Federal Republic of Germany". Today, the design studio has offices around the globe.
www.frogdesign.com

GOLDEN RATIO

In art and architecture, the Golden Ratio is the ideal ratio among different lengths of an object or a construction to one another. It is considered the epitome of aesthetics and harmony and was used intuitively long before its formula was discovered. It is argued that the Golden Ratio can be found in many works of the Renaissance artists such as Raphael, Leonardo da Vinci and Albrecht Dürer. The Golden Ratio defines the harmonious partition of an object into a shorter and a longer section in the mathematical ratio of b:a = c:b. The ratio of the longer section to the total length is the same as the ratio of the smaller section to the longer one (compare: AXOR Uno).

HAPTICS / HAPTIC

Haptics (from Greek "haptikos" = able to touch) is the study of tactile sense. Through touching surfaces and by being touched, living organisms receive various impressions and information. In design, the haptic perception of an object influences our well-being. Our reactions, whether we experience comfort or disgust, a feeling of warmth or coldness, or a sense of ease or irritation, are intuitive and beyond our control. The term goes back to the German psychologist Max Dessoir. He recommended in his publication "Über den Hautsinn" in 1892 to name the study of tactile senses, following terms such as 'acoustics' and 'optics'. The tactile perception of a surface largely determines our emotional relationship to the object, but also our confidence in its ergonomic quality, for example in that of a chair or a musical instrument. Haptic design principles are used in different areas, e.g. in product packaging haptics (form and surface structure), where it is used as an important recognition factor for a brand. A pleasant tactile experience is a decisive product feature, especially for products which are used several times a day (e.g. bathroom faucets).

HARMONY / HARMONIC

Harmony (from Latin/Greek "harmonia"= agreement, concord) is an aesthetic term for the meeting and coexistence of two or more different but matching parts. These parts complement one another, resulting in a harmonious, balanced appearance. Ideally, all different parts retain their own identity, but join together to form a new unit. In most systems—as in music or color—the individual elements must share a common origin on a deeper level in order to be compatible (such as belonging to the same pitch in music or to the same color category).

INDIVIDUALIZATION

The term (from Latin "individuum" = individual being) has its origins in sociology, and refers to the increased desire in the West for individuals to construct their own identities during early industrialization and

modernization. Though the term is used differently in sociology, psychology and economics, at the core it involves freedom of choice. Trend researchers have described individualization as a mega trend, one which affects value systems, consumption patterns and everyday culture. In the product sector, digital technologies such as 3D-printers, the internet, or programs of configuration create new possibilities for individualization. Websites that allow product configuration for vehicles are absolutely indispensable in this sector. Car buyers customize their cars online; choosing motors, colors and equipment packages. Today, product configuration (or customization) has reached nearly every area of everyday life. Food is assorted with different ingredients (My Muesli) and cosmetics are adjusted to the customer's special preferences (My Parfum). Individualization aims to fulfil one's own wishes and desires, allowing them to differ from others and to stand out from the (social) crowd. Interior design individualization—like product design—helps to express unique tastes and exemplifies exclusivity (individuality) (compare: AXOR FinishPlus, AXOR Signiture).

INTERIOR DESIGN

The aim of interior design is the artistic furnishing and decoration of a room. Interior design includes technical and structural aspects, as well as aesthetic, artistic expression. According to the BDIA (Bund Deutscher Innenarchitekten—Association of German Interior Designers), the legally protected professional title "Innenarchitekt" in Germany defines the tasks of an interior designer as follows: "The creative, technical, economical, ecological and social planning of interior spaces and connected to that, the constructional modifications of buildings." Besides the technical aspects, the interior designer creates the sensual perception of a room, which conveys relations and meanings that exceed spatial perception. The representatives of the Bauhaus school sought to tear down the barrier between architecture and interior design. Today, their vision of architecture, interior design, art and product design as one integral task has become very popular once again.

LIFESTYLE

The term lifestyle means individual way of life. In common speech, lifestyle means the cultural form of life of a group of people. Cultural identities that do not refer to an individual are derived from this term and used in common language. In this context, it is common to speak of an American, a Western, or Eastern lifestyle. It not only represents certain values, but also conveys preferences in fashion, music and other areas. Attitudes towards health, professions, free-time, family and the nature of social relationships are also a part of a lifestyle. Lifestyle orientation includes the conscious presentation of one's personality (through cultural and fashion elements) and one's preferred style of accommodation. The ideal of any lifestyle, no matter what its specific orientation, is the creation and communication of individuality. The challenge, it seems, is to find a convincing (authentic) balance between individuality and the prevailing "Zeitgeist"/convention.

LUXURY / LUXURIOUS

Luxury (from Latin "luxus" = richness, excess, opulence) means expenditures and activities which exceed the bounds of what is considered standard or essential in a society. In its positive meaning, luxury is regarded as a desirable situation, in which life is more comfortable for individuals and free from worry. Also, "en vogue" in our society is a luxury which is limited in time and which marks special occasions in life. A clearly negative meaning of luxury, however, is a lifestyle that is superfluous, irresponsible and wasteful. Yet luxury and norms are not to be understood separately from each other. Luxury can be defined as a deviation from a state culturally defined as normal. Against a background of relative wealth on one side and a decrease in quality of life on the other, luxury is less defined by material wealth and instead by immaterial values: personal time, health care, outdoor experiences, family life, space, self-determination, etc. In current discourse, products and services are considered as luxurious when they show unique selling points, are limited (e.g. Haute Couture), or if they enjoy a collector's item status (such as rare wines).

MINIMALISM / MINIMALIST

Strictly speaking, minimalism isn't a style, but a principle in design which can be used in many different styles. The aesthetic aim in minimalism is a functional and visual result characterized by elegance and a concentrated, controlled use of materials. This is achieved by using only as much material as necessary and by focusing on the core of a project. The motto "less is more" is based on an aesthetic rule used in some Asian cultures, where a strong impression is created through the minimal use of objects, ensuring that superfluous elements do not distract from the central idea. The adjective minimalist is often used as a synonym for clear, simple and reduced. A typical feature of minimalism in architecture and design is the avoidance of using too many features. Minimalist designs typically feature primitive colors (e.g. red, yellow, green, blue) or geometrically primitive forms (e.g. circle, square, triangle). Small dimensions appear in the context of large surfaces and smooth surfaces are often dominant. In most cases, this arrangement is connected with a cool, rational design and a highly functional character. In design, the term minimalism is associated with a fundamental, purist trend that consciously broke away from Studio Alchimia and Memphis in the 1980s. The ideal of minimalism is simplicity. Simplicity means that only a few factors contribute to the creation of a form and that relatively few influences are visible. The most exacting requirements in minimalist design are generated when there is a need to integrate complex components into a simple form in a harmonious, virtually invisible way. Minimalist product design therefore often encloses a complex interior or a complex processing of materials. The aim is to transform complexity (with regard to technical equipment or difficult structures) into a highly sophisticated and organizational form. Japanese designer Shiro Kuramata and French architect and designer Philippe Starck are among the most popular representatives of minimalism (compare: AXOR Starck).

MODERN / MODERNITY

In common usage, the term modern means contemporary, up to date, progressive or in accordance with the latest fashion. However, using the term modern as a synonym for fashionable is reductive. Modern refers to the latest developments in society, science and technology. In design, modern is mostly used in a contemporary context. It is less common to use the term with reference to Classical Modernity (early 20th century).

MODULE / MODULARITY / MODULAR

A module is a component of a larger system. Modularization (or the modular principle) refers to partitioning of an ensemble. In modular construction, systems are assembled from standardized individual components. In industrial production, modularization increases efficiency and the resulting modular product offers advantages for the users. Some highly sophisticated and common product lines in the automobile or furniture industry are based on modular construction, which makes it possible to customize a collection, or adjust it to changing circumstances (compare: AXOR ShowerCollection). In architecture, the modular principle

offers a lot of advantages—especially in terms of costs and flexibility. Thanks to modern, computer-based production concepts, modular buildings and individualization possibilities or aesthetic designs are no longer considered as insurmountable hurdles.

MONOLITH / MONOLITHIC

A monolith (from ancient Greek "monólithos" = unified stone or one-stone) is a naturally-shaped or carved block formed from one type of stone. Boulders (large, single pieces of stone) or overhanging mountain ledges are considered (natural) monoliths, as are island rocks (e.g. Uluru in Australia) or rock towers (e.g. Angels Landing in the USA). Monoliths created by human hands include stone pillars, e.g. The Obelisk of Axum, Ethiopia, and the Stone of the Pregnant Woman, Lebanon. The latter is one of the largest carved monoliths and was originally planned to be in the temple complex of Baalbek. The adjective monolithic is usually used synonymously for anything consisting in one piece or one block. In architecture, the term refers to buildings (or parts of buildings) that are built out of one single material (stone or cast concrete). Similarly, underground tanks or water reservoir tanks of a single mold are also called monolithic. In general, objects are described as monolithic if they consist of a single part (compare: AXOR MyEdition).

MONUMENT / MONUMENTAL

Important/meaningful memorials, buildings or large paintings are called monuments (from Latin "moneo" = to commemorate sb./sth., admonish, call attention to) and often have the purpose of preserving the memory of historically important people or events. These could be burial mounds (Hågahügel, Sweden), giant sculptures (Mount Rushmore, USA), or symbolic buildings (Walhalla, Germany). One common usage of monumental is as an adjective for anything reminiscent or serving as a monument, made in large dimensions and therefore very impressive. In architecture, the Neoclassicism of the early 20th century was influenced by the monumental approach to building from antiquity, the Baroque and the Classic. The main building of La Sapienza University (Rome, Italy), the Haus der Kunst (Munich, Germany) or the Michigan Central Station (Detroit, USA) are all examples of this (compare: Neoclassicism). Monumental buildings or furniture have—due to their impressive dimensions—a memorial effect (compare: AXOR Citterio).

NATURAL / NATURE-INSPIRED DESIGN

In common usage, the adjective natural means real, authentic, original and of indigenous origin. This general meaning was coined during the Enlightenment in Rousseau's philosophy, which accentuated the difference between a natural and a civilized way of life. The use of natural in the sense of biological, non-synthetic and pure only became dominant with industrial development and the introduction of artificial materials and artificially produced food. With the increasing mechanization of our surroundings and a growing sense of alienation from nature and traditions, the idea of a natural environment has come to assume greater prominence as an ideal or utopian state. The term natural describes a state of affairs which hasn't been altered by civilization or education. In design and architecture, the term natural refers to a process of imitation with the purpose of achieving an overall impression reminiscent of nature, with the aim to create a sense of well-being. When designing an object and when choosing the materials, all human senses are considered; visual and spatial perception, the senses of smell and touch, sensations of warmth and cold and also cultural connotations. Consequently, nature-inspired design is a design principle that uses nature as role model and recreates a sense of nature. Consequently, nature-inspired design products should create an overall natural impression and enhance the feeling of well-being (compare: AXOR Massaud).

NATURALIST / NATURALISM

Naturalism is a movement in literature and art that experienced its zenith from 1870 until 1890. Artists of naturalism had the aim to portray objects as they are; as realistically as possible, convincing in perspective, accurate in every detail and without euphemism. However, accuracy in appearance, carried to extremes by photorealism, is no guarantee that the message conveyed is genuine or true.

NEOCLASSICISM

Neoclassicism (in contrast to classicism of the late 18th and the early 19th century) is an international architecture trend of the 20th century. The movement turned against Jugendstil and historicism after the First World War and was then characterized by referring to classical style elements and forms. The creators of Neoclassicism studied the buildings of Greek and Roman Antiquity, borrowing and then modifying their clear structure, geometrical layout, monumental appearance and classical order of pillars and gables.
Famous buildings in the Neoclassical style of architecture are found in the USA (e.g. 30th Street Station in Philadelphia), in France (e.g. the Palais de Chaillot in Paris), or in Finland (e.g. the Finnish Parliament in Helsinki). A unique neoclassical style with a monumental focus emerged in Germany under National Socialism and in fascist Italy, for example from Albert Speer or Enrico del Debbio. Famous examples in Germany include the Olympic Stadium and the Neue Reichskanzlei. In Italy, examples include the sports facilities Foro Italico in Rome, as well as St. Peter's Basilica and the Basilica of St. Paul in Rome. In Russia, socialist Neoclassicism influences many cities even today: the Moscow State University is one example, as is the House of Soviets in St. Petersburg.

NOSTALGIA / NOSTALGIC

Nostalgia (from Latin nostalgia" = homesickness, Greek "nóstos" = homecoming and "álgos" = pain) describes the memory of good times past: a feeling of undefined, retrospective longing which motivates one to recall or revive past styles in art, music or fashion. Nostalgic design or nostalgia is invoked by products, spaces, and music (e.g. by reusing flower power elements of the 1960s, or the music of the 1980s). The focus is on reconstructing a past style as accurately as possible, without adding new elements, or on creating a new style by combining old and new elements (compare: Retro) (compare: AXOR Montreux).

ORGANIC DESIGN

Organic Design is both a style and a principle of design and construction. As a style, it constitutes the polar opposite of geometric, functionalist styles. It is inspired by organic shapes and sometimes also by inorganic, particularly crystalline, structures, both of which appear in nature. Classical features of Organic Design are powerful curves and dynamic, round shapes. Typically, (but not exclusively) amorphous forms are used which appear natural and symbolize nature. The aim is to achieve a pleasing, natural impression and many organic designs allude to structures that occur naturally. As a design principle, Organic Design can be found in many disciplines and there is no stylistic unity. Organic forms can be found in traditional, high-tech or minimalistic styles. Organic Design is

not characterized by stylistic expression, but rather by a principle of construction that imitates nature (e.g. cellular, netted, skeletal, crystalline) and by abandoning classical static weight-bearing structures in favor of a more flexible and elastic construction. What all organic objects have in common is a design that is developed from the inside out and a focus on accentuating expression. Common techniques include asymmetrical construction, flowing lines, soft shapes, directed structures, plastic volumes and dynamic forms. In organic architecture, buildings might appear to grow or they might even appear to have an explosive energy. Frank Lloyd Wright (Guggenheim Museum New York), Eero Saarinen, and Hans Scharoun in Germany each produced ground-breaking work in this field. Today, futuristic buildings by architects such as Frank O. Gehry, Zaha Hadid, or Peter Cook (Kunsthaus Graz) increasingly showcase organic design elements. The most important representatives are Ron Arad, Luigi Colani, Massimo Iosa-Ghini, Ross Lovegrove (seats for Japan Airlines, 2002) and Philippe Starck. Objects designed through Organic Design principles are often shaped ergonomically and made of high-quality, sustainable materials which fit the overall idea of the product (compare: AXOR Starck Organic).

ORIGINAL

The word original (from Latin "origo" = beginning) has several meanings. As opposed to a counterfeit, an original is a genuine product or object. As opposed to a copy, an original is a work created by the artist; it is neither changed or replicated. Original can also mean the initial version or prototype; the first version of a text, painting, work of art, or product model. As an adjective, original can also mean innovative, creative, or ingenious. In this context, the adjective original describes something incomparable and exceptional.

PROPORTION / PROPORTIONAL

In aesthetics, proportionality means a ratio of size or length which is particularly pleasing to the eye. In fine arts, proportion is used to measure the ideal ratio of individual parts to one another and to the whole. In architecture, it is the measurement of width, height and depth in relation to the complete building (compare: Golden Ratio). How we perceive the balance of proportions is not a matter of chance. It is determined by biology, aesthetics and culture. American cars seem overproportioned to Europeans, but still harmonious as a whole. Extra-long necks, considered an ideal of beauty in some African cultures, challenge our perception of proportions. In fashion, taste changes faster than in other areas, whereas in architecture it is relatively more constrained by structural requirements.

PURISM / PURISTIC

Today, the term purism (from Latin "purus" = clear/pure or French "le purisme" = the Purism) is mostly used as a synonym for simplicity and frugality. Purism is a style within the modern art and architecture of the 20th century. It was originally used in the sense of linguistic purism, which advocated a pure, unaltered style, free of any foreign objects. Purists want to keep a cultural characteristic as authentic, original and pure as possible. A strictly classical design can also be considered purist. Purism is therefore always associated with a certain sense of stringency. As a design movement, purism developed from an aesthetic trend which itself derived from Russian constructivism, a style which called for clear, austere art modelled on the basis of purely architectural and geometric forms. The ideal is a composition of elementary geometric forms that avoid purely decorative effects. In contemporary design terminology, purism stands for the extremely reduced use of forms with an almost ascetic character. An ethical component can also be perceived: modesty in outward appearance meant to convey a nearly sacral concentration on intrinsic value. Since purism also represents the ideal of authenticity, nothing is concealed (as opposed to minimalism) to achieve a more homogenous and harmonious appearance. All elements should speak for themselves. Typical features of purism include a minimal combination of materials, untreated surfaces, clarity through sharp lines, geometric or archetypal forms (including traditional, simple forms), strong contrasts with few primary colors and combinations of black, white and grey. Purism is characterized by structure, timelessness and substance (compare: AXOR Uno).

QUOTATION

In general usage, quotation refers to the literal repetition of a part of a text. In the context of art, architecture and design, quotation describes the reclamation of parts of an older work in the process of creating a new one. Quotation is a technique that has been popular in many periods in art history and was revived in the 20th century, particularly by postmodernists. While in postmodernity quotations were mostly used in an ironic and playful manner, designers in the modern eclectic style employ quotations as a means of deriving new design interpretations and, ultimately, new designs.

SCULPTURE / SCULPTURAL

A sculpture (from Latin "sculpere" = to carve, create, chisel) is a three-dimensional body (mostly a piece of art) which has a powerful and symbolic appearance from several perspectives and which clearly distinguishes itself from its environment (compare: Plastic). A sculptural design element delivers its own, autonomous statement, is independent of its environment and has a strong influence on the viewer's perception of a space (compare: AXOR Edge).

SENSUALITY / SENSUAL

Colloquially, sensuality means turning the senses or the receptivity of the sense organs toward outer impressions. Perception makes it possible for us to distinguish our environment for its materials and forms, and to recognize and categorize things from their characteristics. Often sensuality is associated with eroticism, but also with sensual driving forces, preferences, desires and passions, needs, and feelings of pleasure and displeasure. Sensual as an adjective describes something "happening through or recognizing something by senses" or "belonging to the senses". The term sensual is also used in the context of "concentrating on senses", if the product focuses on the human senses. Design can be sensual, if it attracts someone in an emotional way and if touch, sight and taste are triggered in a positive way. Sensual design is often combined with a comfortable feel and/or balanced look (compare: Golden Ratio) (compare: AXOR Starck Organic).

STYLE

Style is primarily the expression of personality. It is not restricted to individual expression and can also signify the presentation and expression of an epoch (such as Jugendstil), a region (like the Italian "Bel Design"), or an artist/group of artists or designers (Bauhaus, Memphis, etc.). A style is identified by recurring, characteristic features and by a particular choice and use of forms. In fine arts, it is called a style if these features form a pattern that appears in numerous individual works. These characteristics can develop into a personal style (also called individual style) found in art,

design or in fashion. However, a style can be considered archaic, idealist or naturalist, independent of personalities or time periods. In design, the most widely known stylistic categories are functionalist, minimalist, organic and classical.

STYLE MIX

A combination of style elements from different historical contexts (compare: Eclecticism) or from different aesthetic backgrounds. A style mix typically features objects taken from different designs. However, these different styles are not mixed within a product or a collection, ensuring that the individual style remains distinguishable. This is a commonly used method in interior design. Style elements are often used sparingly to establish accents and contrasts, attempting to create tension and challenge familiar perspectives. This lends a distinctive character to a minimalist or purist ambience. The intention is to invite a fresh perspective on objects considered as aesthetic standard-setters due to their immaculate appearance.

SYMBOL / SYMBOLIC

A symbol (from Greek "symbolikós" = identification or identity mark) always carries a meaning. It is an image defined by certain conventions and conveys a meaning that is open to interpretation. Whereas a sign conveys something specific, symbols are complex, representative of something that is imperceptible. Symbolic in this sense means representative or "referring to a deeper meaning". In the context of design, symbols are not employed as direct signs (e.g. as in language theory or with traffic signs), but rather convey an indirect message, as a symbol goes beyond the meaning of the object itself. The meaning of symbols in religions, myths or art often resist translation or interpretation by reason alone. A similar depth of meaning can be found in design, but symbols in design mostly have an emotional function. Either the design itself conveys a familiar, conventional world (such as the wing chair or the AXOR Starck faucet, reminiscent of an old-fashioned pump) (compare: Archetype), or individual design elements stand for different aspects of life—such as the color gold for luxury, chrome for sophisticated technology, or leaf-shaped for nature. The symbolic function of design (as opposed to a mere indication of intended use and operation) becomes apparent in its relation to the social context. For instance, Bauhaus symbolized avant-gardist ideas, functionalism represented industrial progress, country style was a symbol for the simple life and minimalism stands for sophistication and high-tech comfort.

TENSION

In physics, the term tension describes the force inside an elastic body. A more metaphorical understanding is used in design, where the body is rarely elastic and the force in question is not of a physical nature, but manifests itself as a visual and emotional energy. Tension is created through polarization or a hierarchical structure, rendering an object more desirable and attractive in the long term.

TIMELESS

Not constrained or subject to a fashion or era. Timeless can be defined in totally different ways and can relate to events, people, or objects. In everyday usage, any long-awaited aesthetic unaffected by changes in fashion is labelled timeless (compare: Classic).

UNICUM

A unicum (from Latin "unus" = one, one single) is an object or a product which only exists once in this form. Even though the (democratic) nature of design manifests itself in reproducibility and serial production, unica today are no longer restricted solely to the art market. Instead, some design products are marketed (and priced) as limited editions of a serial design, or as unique objects (compare: AXOR Signature).

URBAN

The adjective (from Latin "urbanus" = belonging to the city, to: urbs = city) stands for the city or characterizing urban life. Individuals are described as educated or sophisticated if their social manners or appearance are urban. The term urban design describes town planning and development and includes the planning and the creation of all building measures in a city or landscape. That includes public buildings as well as residential buildings, open spaces and infrastructure. In the context of products and interior design, creations with an urban touch or character are aimed towards usefulness in the modern metropolis. Urban furniture fits perfectly into big-city-life within loft spaces and skyscrapers, and is characterized by pure elegance, without ornamentation or other representative details.

P U B L I S H E R
AXOR / Hansgrohe SE

C O N C E P T A N D D E S I G N
Tatiana van Houten, Germany

P H O T O G R A P H Y
Bohmann Sjöstrand
Marco Craig
Lorenz Cugini
Alex Dwyer
Tom Hegen
Jehle & Will
Kuhnle & Knödler
Uli Maier
Gulliver Theis
Markus Wendler
Mattia Zoppellaro/contrasto/laif

3 D A R T I S T S
ACPV Architects
eder GmbH
Liganova
recom GmbH & Co. KG
RenderFolk
Spot Studio S.L.
SupaCGI
Tara Bernerd & Partners

P H O T O G R A P H Y A X O R I N S P I R A T I O N S
Villa Copehagen, Copenhagen – Tom Hegen
Rosewood Munich, Germany – Tom Hegen
Arte Surfside, Miami Beach – Kris Tamburello
ATMOSPHERE SPA by Krallerhof, Austria – HG Esch
Rosewood, Sao Paulo – Ruy Teixeira
Volta Gallery Lofts By Endover, Talinn/ Estonia – Kaupo Kalda
ÖÖD Golden House: Jaan Parmask
BVLGARI Hotel Tokyo/ Japan – Bulgari Tokyo
Chou Chou, Paris – Nicolas Anetson
The Hari, Hong Kong – Origin One Ltd

L I T H O G R A P H Y
con10com GmbH, Kitzbühel

All products are subject to availability. Availability may be temporarily affected by material shortages, supply chain interruptions, or other force majeure events. Please contact us for further details. Subject to technical changes and color deviations for printing reasons. Printed on 100% chlorine-free bleached paper.

AXOR Product catalogue 2026 en-EN

AXOR / Hansgrohe SE
P.O. Box 1145
77757 Schiltach
Germany
info@axor-design.com

AXOR-DESIGN.COM